SAPPORO 150 (DAL00)

LA-1911 REV1.0 Schematic

Desktop Prescott/Northwood uFCPGA-478 CPU

Springdale(865PE)+ICH5+nVIDIA NV34M(64MB VRAM)

2003-08-06

Compal Electronics, Inc.		
Title	Cover Page	
Size B	Document Number	Rev 0.2
Date: Friday, August 08, 2003	Sheet 1 of 57	

hexainf@hotmail.com

DAL00 LA-1911 BLOCK DIAGRAM

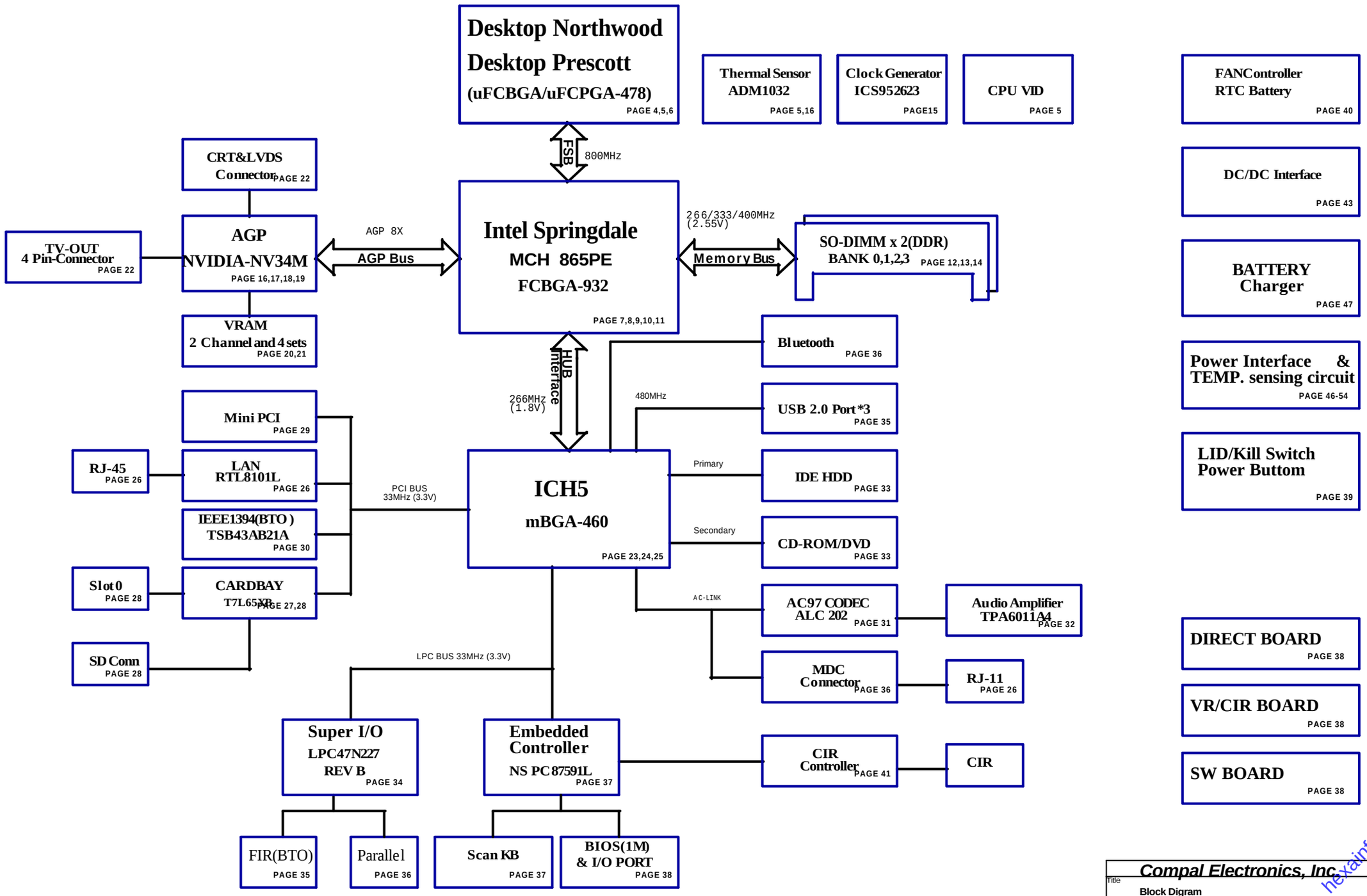

hexainf@hotmail.com

Compal Electronics, Inc.			
Title: Block Digram			
Size: Custom	Document Number		Rev: 0.2
Date: Friday, August 08, 2003	Sheet 2 of 57		

Voltage Rails

Power Plane	Description	S1	S3	S5
VIN	Adapter power supply (19V)	N/A	N/A	N/A
B+	AC or battery power rail for power circuit.	N/A	N/A	N/A
+CPU_CORE	Core voltage for CPU	ON	OFF	OFF
+CPU_VID	1.2V switched power rail for CPU AGTL Bus	ON	OFF	OFF
+VTT_GMCH	+1.225V (Prescott) / +1.45V (Northwood)	ON	OFF	OFF
+VGA_CORE	1.2V/1.5V switched power rail for VGA chip	ON	OFF	OFF
+1.25VS	1.25V switched power rail	ON	OFF	OFF
+1.5VS	AGP 4X/8X	ON	OFF	OFF
+2.5V	2.5V power rail	ON	ON	OFF
+2.5VS	2.5V switched power rail	ON	OFF	OFF
+3VALW	3.3V always on power rail	ON	ON	ON*
+3V	3.3V power rail	ON	ON	OFF
+3VS	3.3V switched power rail	ON	OFF	OFF
+5VALW	5V always on power rail	ON	ON	ON*
+5V	5V power rail	ON	ON	OFF
+5VS	5V switched power rail	ON	OFF	OFF
+12VALW	12V always on power rail	ON	ON	ON*
+RTCVCC	RTC power	ON	ON	ON

Note : ON* means that this power plane is ON only with AC power available, otherwise it is OFF.

External PCI Devices

Device	IDSEL#	REQ#/GNT#	Interrupts
VGA	AD16		PIRQA
CardBus	AD20	2	PIRQA/PIRQB/PIRQC/PIRQD
LAN	AD17	3	PIRQF
Mini-PCI	AD18	1/4	PIRQG/PIRQH
1394	AD16	0	PIRQE
SD	AD22		PIRQA/PIRQB/PIRQC/PIRQD

EC SM Bus1 address

Device	Address
Smart Battery	0001 011X b
EEPROM(24C16/02)	1010 000X b
(24C04)	1011 000Xb

EC SM Bus2 address

Device	Address
ADM1032	1001 110X b

ICH5 SM Bus address

Device	Address
Clock Generator (ICS 952623)	1101 001Xb
DDR DIMM0	1010 000Xb
DDR DIMM2	1010 010Xb

STATE \ SIGNAL	SLP_S1#	SLP_S3#	SLP_S4#	SLP_S5#	+VALW	+V	+VS	Clock
Full ON	HIGH	HIGH	HIGH	HIGH	ON	ON	ON	ON
S1(Power On Suspend)	LOW	HIGH	HIGH	HIGH	ON	ON	ON	LOW
S3 (Suspend to RAM)	LOW	LOW	HIGH	HIGH	ON	ON	OFF	OFF
S4 (Suspend to Disk)	LOW	LOW	LOW	HIGH	ON	OFF	OFF	OFF
S5 (Soft OFF)	LOW	LOW	LOW	LOW	ON	OFF	OFF	OFF

Board ID Table for AD channel

Vcc	3.3V +/- 5%
Ra	100K +/- 5%

Board ID	Rb	V_{AD_BID} min	V_{AD_BID} typ	V_{AD_BID} max
0	0	0 V	0 V	0 V
1	8.2K +/- 5%	0.216 V	0.250 V	0.289 V
2	18K +/- 5%	0.436 V	0.503 V	0.538 V
3	33K +/- 5%	0.712 V	0.819 V	0.875 V
4	56K +/- 5%	1.036 V	1.185 V	1.264 V
5	100K +/- 5%	1.453 V	1.650 V	1.759 V
6	200K +/- 5%	1.935 V	2.200 V	2.341 V
7	NC	2.500 V	3.300 V	3.300 V

Board ID	PCB Revision
0	0.1
1	
2	
3	
4	
5	
6	
7	

hexainf@hotmail.com

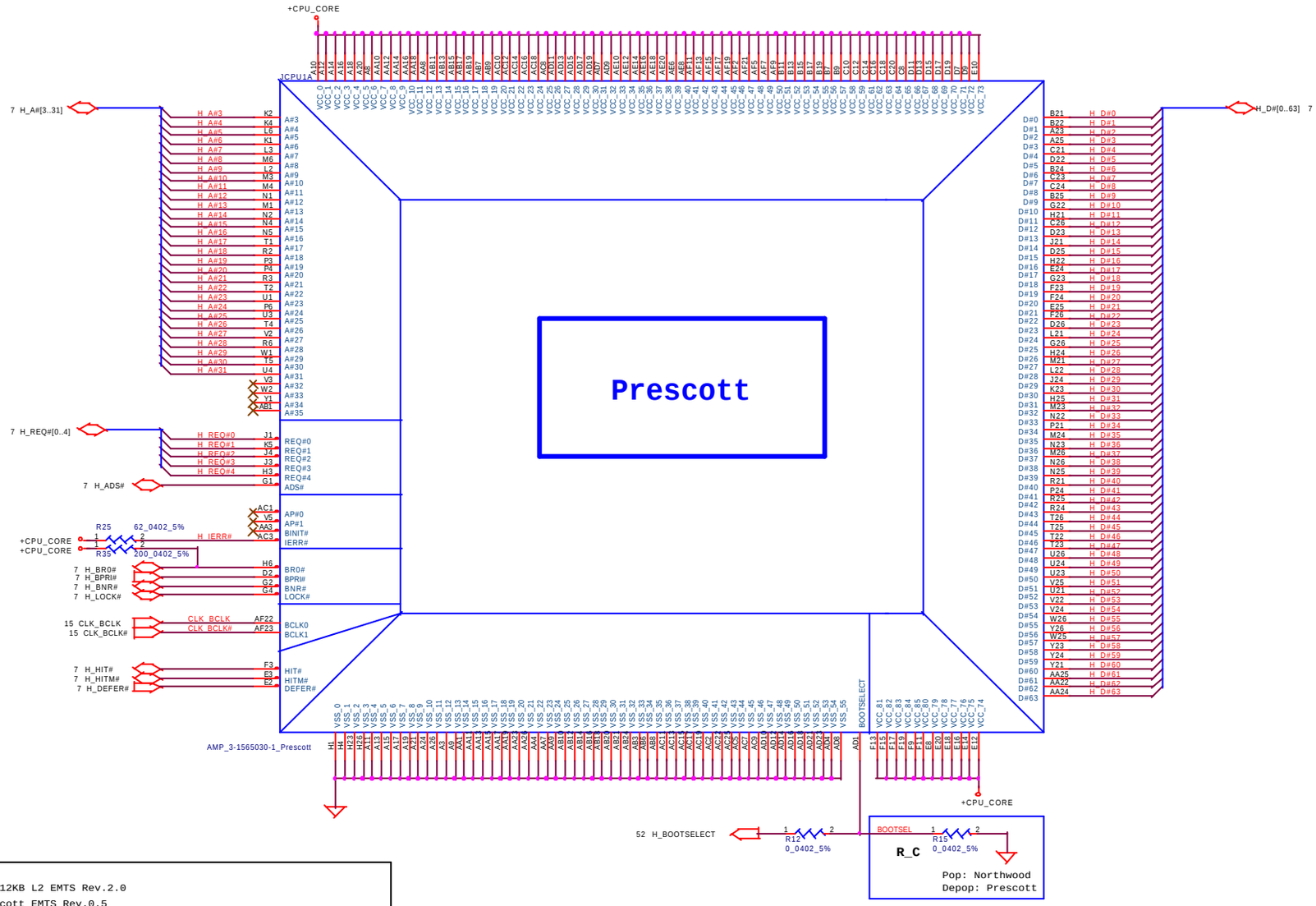

Reference Intel document
Desktop P4 Spec.: 10988 P4 0.13u 512KB L2 EMTS Rev.2.0
Desktop Prescott Spec.: 11910 Prescott EMTS Rev.0.5

Pin number	Northwood Pin name	Commend	Prescott Pin name	Commend	Northwood	Prescott
B6	FERR#	Pull-up 62ohm to +VCC_CORE	FERR#/PBE#	Pull-up 62ohm to +VCC_CORE	Pop	Pop
AA20	ITPCLKOUT0	Pull-up56ohm to +VCC_CORE	TESTHI6	Pull-up 62ohm to +VCC_CORE	Pop	Pop
AB22	ITPCLKOUT1	Pull-up 56ohm to +VCC_CORE	TESTHI7	Pull-up 62ohm to +VCC_CORE	Pop	Pop
AD2	NC	float	VIDPWRGD	Pull-up 8.2Kohm to +VCCVID	Depop	Pop
AD3	NC	float	VID5	Pull-up1Kohm to +3VRUN & connect to PWRIC	Depop	Pop
AF3	NC	float	VCCVIDLB	Connect to +VCCVID	Depop	Pop
AD20	VCCA	Connect to CPU Filter	VCCIOPLL	Connect to CPU Filter		
AF23	VCCIOPLL	Connect to CPU Filter	VCCA	Connect to CPU Filter		
AD1	VSS	Connect to GND	BOOTSELECT	CPU determine	Pop	Depop
AE26	VSS	Connect to GND	OPTIMIZED/ COMPAT#	float	Pop	Depop

THIS SHEET OF ENGINEERING DRAWING IS THE PROPRIETARY PROPERTY OF COMPAL ELECTRONICS, INC. AND CONTAINS CONFIDENTIAL AND TRADE SECRET INFORMATION. THIS SHEET MAY NOT BE TRANSFERED FROM THE CUSTODY OF THE COMPETENT DIVISION OF R&D DEPARTMENT EXCEPT AS AUTHORIZED BY COMPAL ELECTRONICS, INC. NEITHER THIS SHEET NOR THE INFORMATION IT CONTAINS MAY BE USED BY OR DISCLOSED TO ANY THIRD PARTY WITHOUT PRIOR WRITTEN CONSENT OF COMPAL ELECTRONICS, INC.

Compal Electronics, Inc.
Title: Prescott Processor in uFCPGA478 (1/2)
Size: C | Document Number: LA-1911 | Rev: 0.2
Date: Friday, August 08, 2003 | Sheet 4 of 57

nexainf@hotmail.com

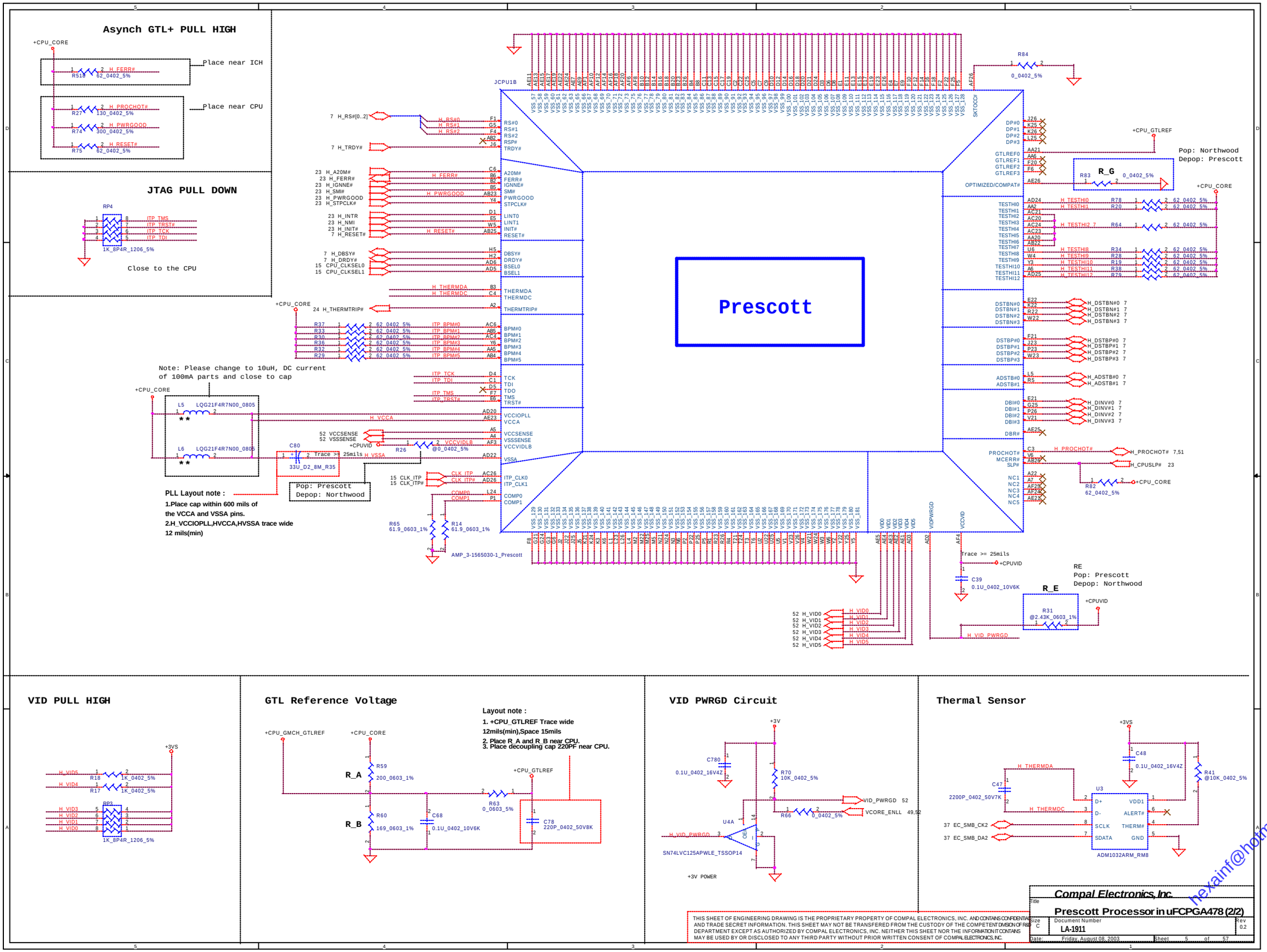

hexainf@hotmail.com

Place 11 North of Socket(Stuff 8)

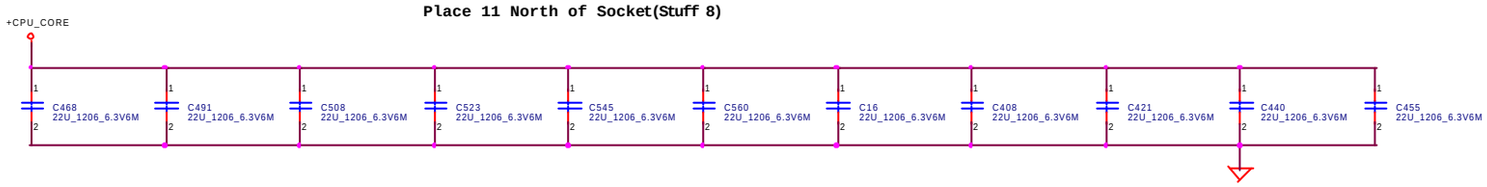

22uF depop reference
Springdale Customer Schematic R1.2 page82

Place 12 Inside Socket(Stuff all)

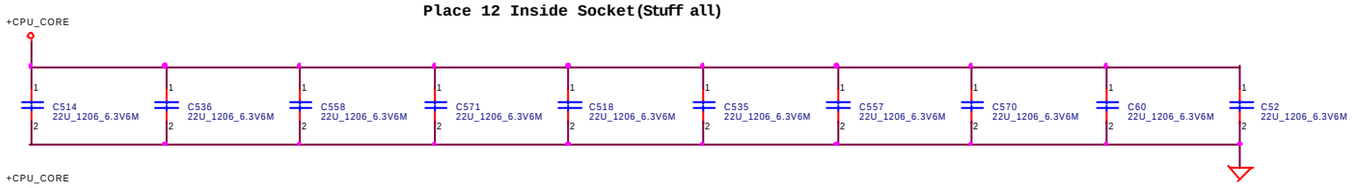

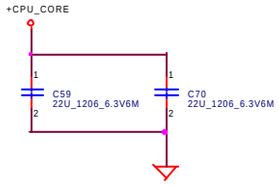

Place 9 South of Socket(Unstuff all)

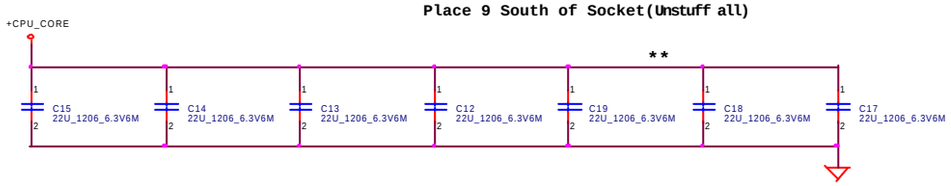

470uF _ERS10m ohm* 15, ESR=0.5m ohm

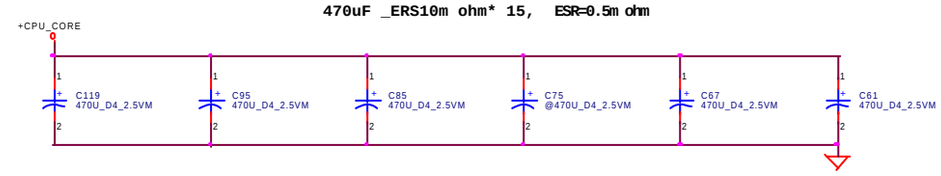

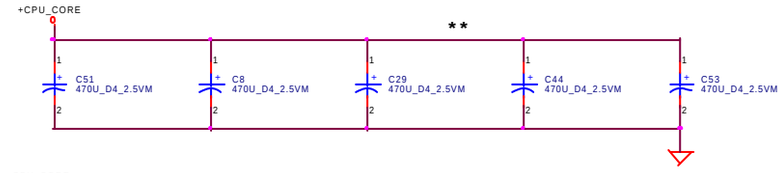

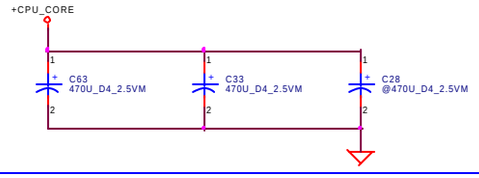

Decoupling Reference Document:
Springdale Chipset Platform Design guide Rev1.11 (12474)page239

Decoupling Reference Requirement:
560uF Polymer, ESR:5m ohm(each) * 10
22uF X5R * 32

THIS SHEET OF ENGINEERING DRAWING IS THE PROPRIETARY PROPERTY OF COMPAL ELECTRONICS, INC. AND CONTAINS CONFIDENTIAL AND TRADE SECRET INFORMATION. THIS SHEET MAY NOT BE TRANSFERED FROM THE CUSTODY OF THE COMPETENT DIVISION OF R&D DEPARTMENT EXCEPT AS AUTHORIZED BY COMPAL ELECTRONICS, INC. NEITHER THIS SHEET NOR THE INFORMATION IT CONTAINS MAY BE USED BY OR DISCLOSED TO ANY THIRD PARTY WITHOUT PRIOR WRITTEN CONSENT OF COMPAL ELECTRONICS, INC.

Title	*Compal Electronics, Inc.*	
	CPU Decoupling	
Size C	Document Number LA-1911	Rev 0.2
Date: Friday, August 08, 2003	Sheet 6 of 57	

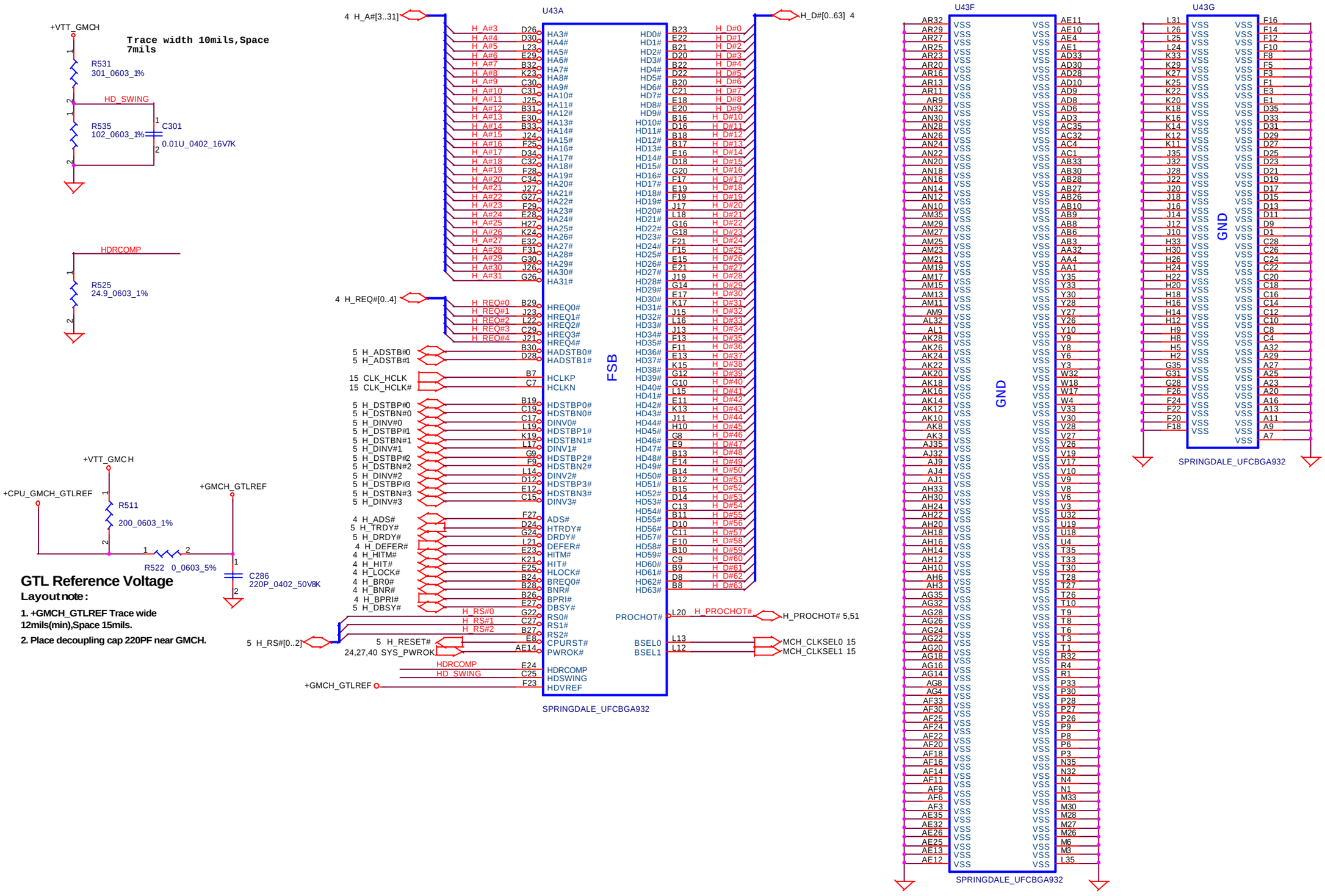

THIS SHEET OF ENGINEERING DRAWING IS THE PROPRIETARY PROPERTY OF COMPAL ELECTRONICS, INC. AND CONTAINS CONFIDENTIAL AND TRADE SECRET INFORMATION. THIS SHEET MAY NOT BE TRANSFERED FROM THE CUSTODY OF THE COMPETENT DIVISION OF R&D DEPARTMENT EXCEPT AS AUTHORIZED BY COMPAL ELECTRONICS, INC. NEITHER THIS SHEET NOR THE INFORMATION IT CONTAINS

Compal Electronics, Inc.

Title	Springdale-Host/GND (1/4)	
Size B	Document Number LA-1911	Rev 0.2
Date: Friday, August 08, 2003	Sheet 7 of 57	

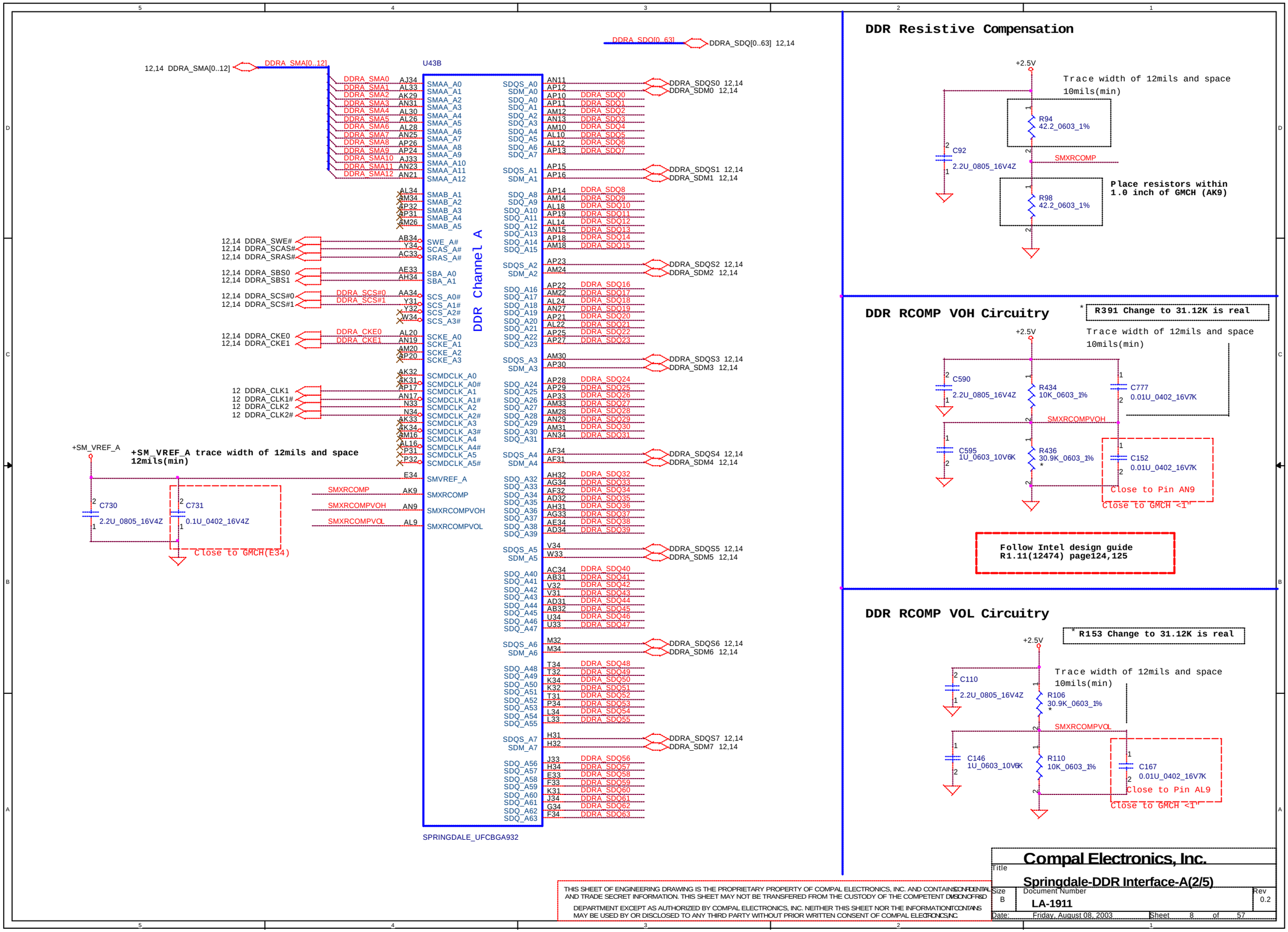

THIS SHEET OF ENGINEERING DRAWING IS THE PROPRIETARY PROPERTY OF COMPAL ELECTRONICS, INC. AND CONTAINS CONFIDENTIAL AND TRADE SECRET INFORMATION. THIS SHEET MAY NOT BE TRANSFERED FROM THE CUSTODY OF THE COMPETENT DIVISION OF R&D DEPARTMENT EXCEPT AS AUTHORIZED BY COMPAL ELECTRONICS, INC. NEITHER THIS SHEET NOR THE INFORMATION IT CONTAINS MAY BE USED BY OR DISCLOSED TO ANY THIRD PARTY WITHOUT PRIOR WRITTEN CONSENT OF COMPAL ELECTRONICS, INC.

Compal Electronics, Inc.	
Title: Springdale-DDR Interface-A(2/5)	
Size: B	Document Number: LA-1911	Rev: 0.2
Date: Friday, August 08, 2003	Sheet 8 of 57

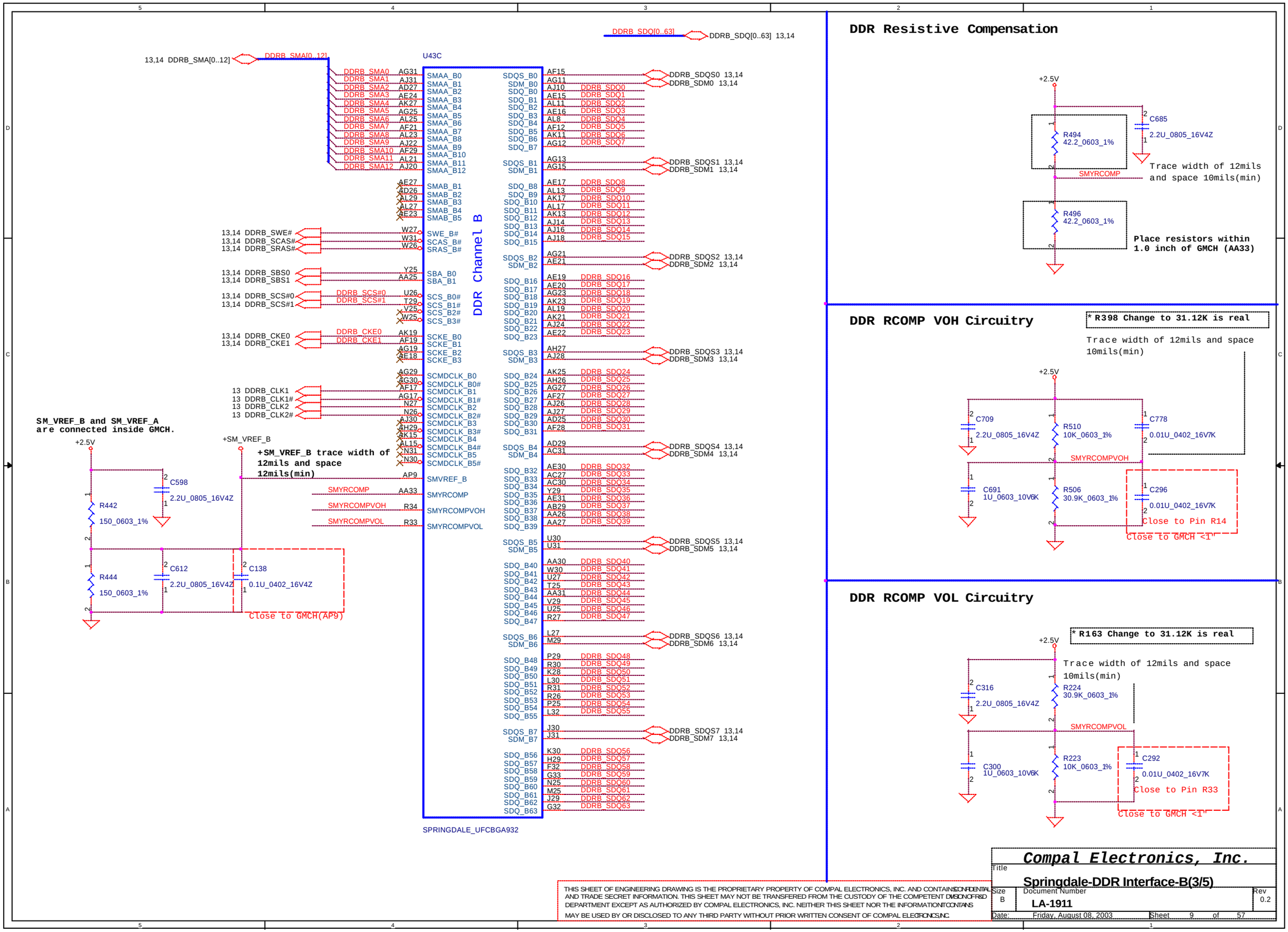

THIS SHEET OF ENGINEERING DRAWING IS THE PROPRIETARY PROPERTY OF COMPAL ELECTRONICS, INC. AND CONTAINS CONFIDENTIAL AND TRADE SECRET INFORMATION. THIS SHEET MAY NOT BE TRANSFERED FROM THE CUSTODY OF THE COMPETENT DIVISION OF R&D DEPARTMENT EXCEPT AS AUTHORIZED BY COMPAL ELECTRONICS, INC. NEITHER THIS SHEET NOR THE INFORMATION IT CONTAINS MAY BE USED BY OR DISCLOSED TO ANY THIRD PARTY WITHOUT PRIOR WRITTEN CONSENT OF COMPAL ELECTRONICS, INC.

Compal Electronics, Inc.

Title: Springdale-DDR Interface-B(3/5)

Size	Document Number	Rev
B	LA-1911	0.2

Date: Friday, August 08, 2003 Sheet 9 of 57

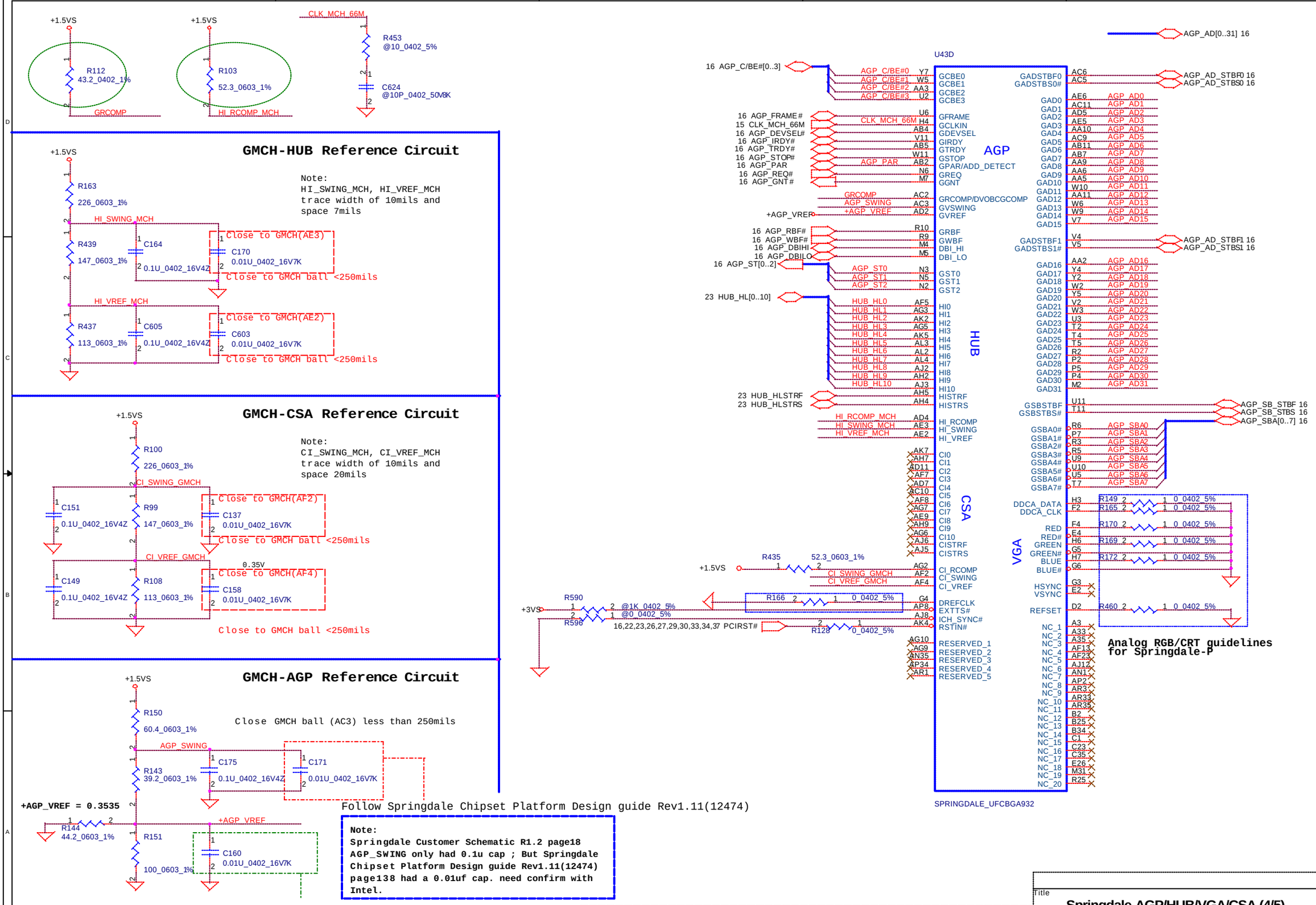

THIS SHEET OF ENGINEERING DRAWING IS THE PROPRIETARY PROPERTY OF COMPAL ELECTRONICS, INC. AND CONTAINS CONFIDENTIAL AND TRADE SECRET INFORMATION. THIS SHEET MAY NOT BE TRANSFERED FROM THE CUSTODY OF THE COMPETENT DIVISION OF R&D DEPARTMENT EXCEPT AS AUTHORIZED BY COMPAL ELECTRONICS, INC. NEITHER THIS SHEET NOR THE INFORMATION IT CONTAINS MAY BE USED BY OR DISCLOSED TO ANY THIRD PARTY WITHOUT PRIOR WRITTEN CONSENT OF COMPAL ELECTRONICS, INC.

Title	Springdale-AGP/HUB/VGA/CSA (4/5)	
Size B	Document Number LA-1911	Rev 0.2
Date: Friday, August 08, 2003	Sheet 10 of 57	

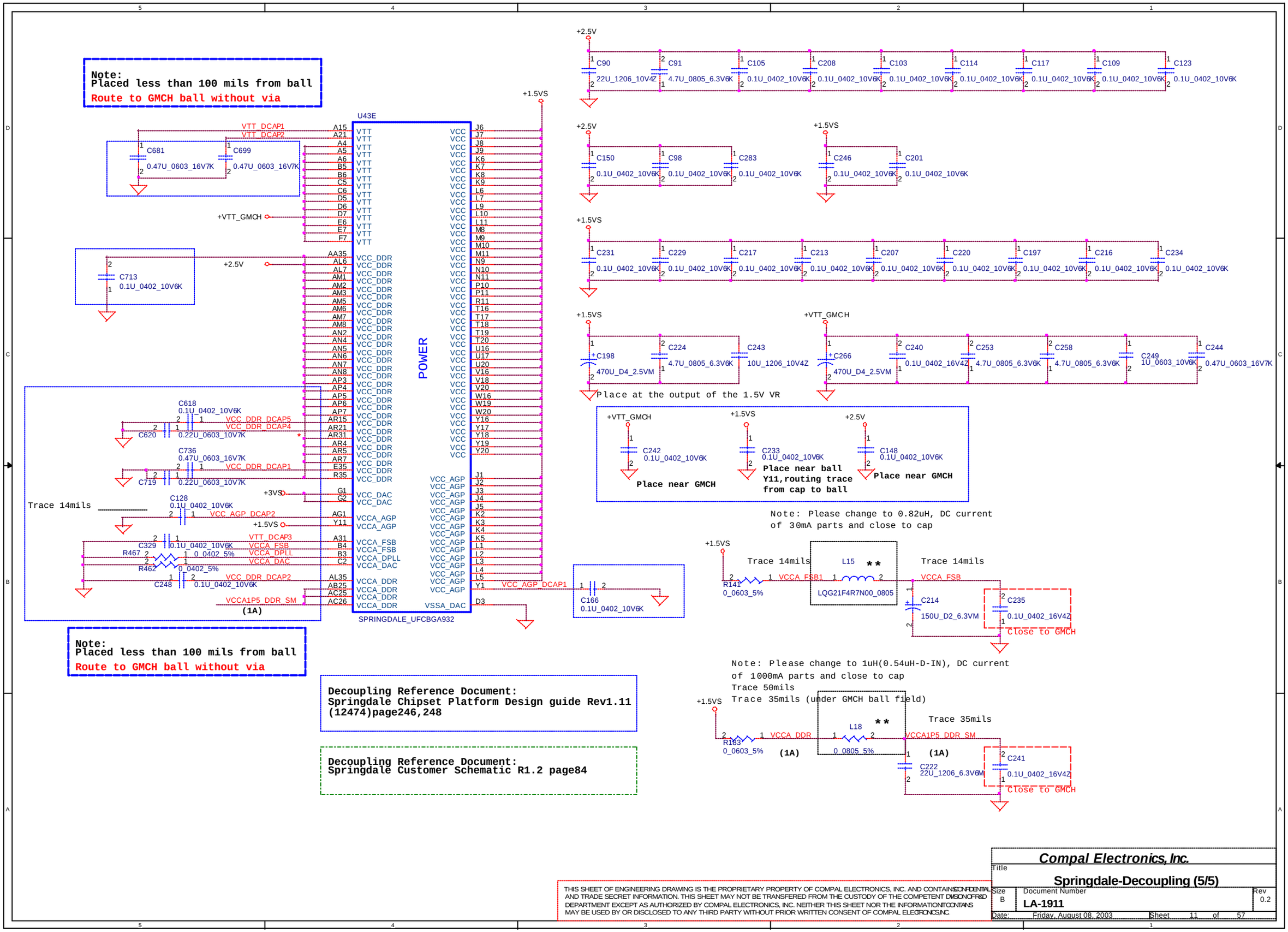

THIS SHEET OF ENGINEERING DRAWING IS THE PROPRIETARY PROPERTY OF COMPAL ELECTRONICS, INC. AND CONTAINS CONFIDENTIAL AND TRADE SECRET INFORMATION. THIS SHEET MAY NOT BE TRANSFERED FROM THE CUSTODY OF THE COMPETENT DIVISION OF R&D DEPARTMENT EXCEPT AS AUTHORIZED BY COMPAL ELECTRONICS, INC. NEITHER THIS SHEET NOR THE INFORMATION IT CONTAINS MAY BE USED BY OR DISCLOSED TO ANY THIRD PARTY WITHOUT PRIOR WRITTEN CONSENT OF COMPAL ELECTRONICS, INC.

Compal Electronics, Inc.			
Title	Springdale-Decoupling (5/5)		
Size B	Document Number LA-1911		Rev 0.2
Date: Friday, August 08, 2003	Sheet 11 of 57		

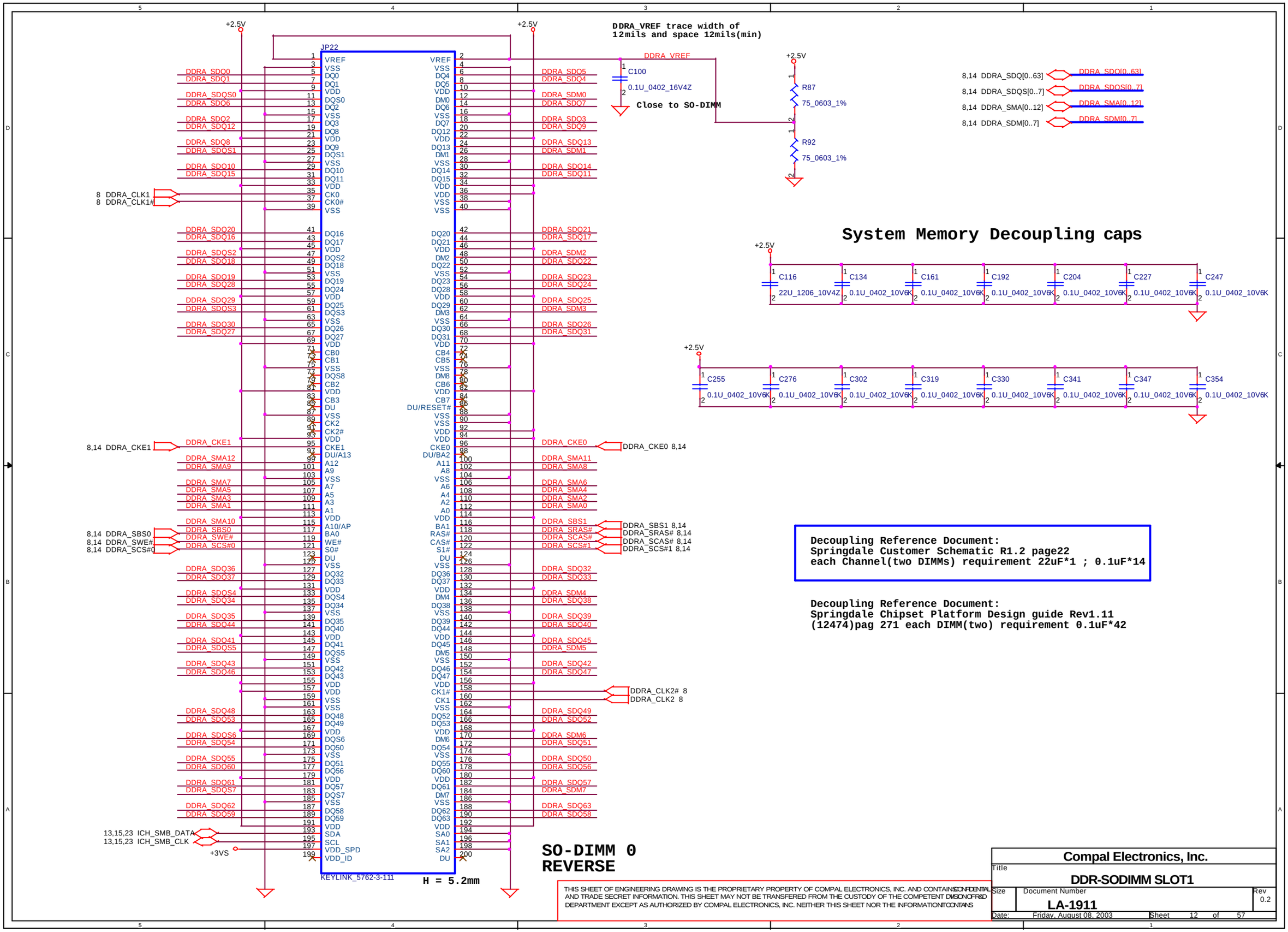
DDRA_VREF trace width of
12mils and space 12mils(min)
JP22
DDRA_VREF
C100
0.1U_0402_16V4Z
Close to SO-DIMM
+2.5V
R87
75_0603_1%
R92
75_0603_1%
8,14 DDRA_SDQ[0..63]
8,14 DDRA_SDQS[0..7]
8,14 DDRA_SMA[0..12]
8,14 DDRA_SDM[0..7]
DDRA_SDQ[0..63]
DDRA_SDQS[0..7]
DDRA_SMA[0..12]
DDRA_SDM[0..7]
System Memory Decoupling caps
C116 22U_1206_10V4Z
C134 0.1U_0402_10V6K
C161 0.1U_0402_10V6K
C192 0.1U_0402_10V6K
C204 0.1U_0402_10V6K
C227 0.1U_0402_10V6K
C247 0.1U_0402_10V6K
C255 0.1U_0402_10V6K
C276 0.1U_0402_10V6K
C302 0.1U_0402_10V6K
C319 0.1U_0402_10V6K
C330 0.1U_0402_10V6K
C341 0.1U_0402_10V6K
C347 0.1U_0402_10V6K
C354 0.1U_0402_10V6K
Decoupling Reference Document:
Springdale Customer Schematic R1.2 page22
each Channel(two DIMMs) requirement 22uF*1 ; 0.1uF*14
Decoupling Reference Document:
Springdale Chipset Platform Design guide Rev1.11
(12474)pag 271 each DIMM(two) requirement 0.1uF*42
8 DDRA_CLK1
8 DDRA_CLK1#
8,14 DDRA_CKE1
DDRA_CKE0 8,14
8,14 DDRA_SBS0
8,14 DDRA_SWE#
8,14 DDRA_SCS#0
DDRA_SBS1 8,14
DDRA_SRAS# 8,14
DDRA_SCAS# 8,14
DDRA_SCS#1 8,14
DDRA_CLK2# 8
DDRA_CLK2 8
13,15,23 ICH_SMB_DATA
13,15,23 ICH_SMB_CLK
+3VS
KEYLINK_5762-3-111
H = 5.2mm
SO-DIMM 0
REVERSE
THIS SHEET OF ENGINEERING DRAWING IS THE PROPRIETARY PROPERTY OF COMPAL ELECTRONICS, INC. AND CONTAINS CONFIDENTIAL AND TRADE SECRET INFORMATION. THIS SHEET MAY NOT BE TRANSFERED FROM THE CUSTODY OF THE COMPETENT DIVISION OF R&D DEPARTMENT EXCEPT AS AUTHORIZED BY COMPAL ELECTRONICS, INC. NEITHER THIS SHEET NOR THE INFORMATION IT CONTAINS
Compal Electronics, Inc.
Title
DDR-SODIMM SLOT1
Size
Document Number
LA-1911
Rev
0.2
Date: Friday, August 08, 2003
Sheet 12 of 57

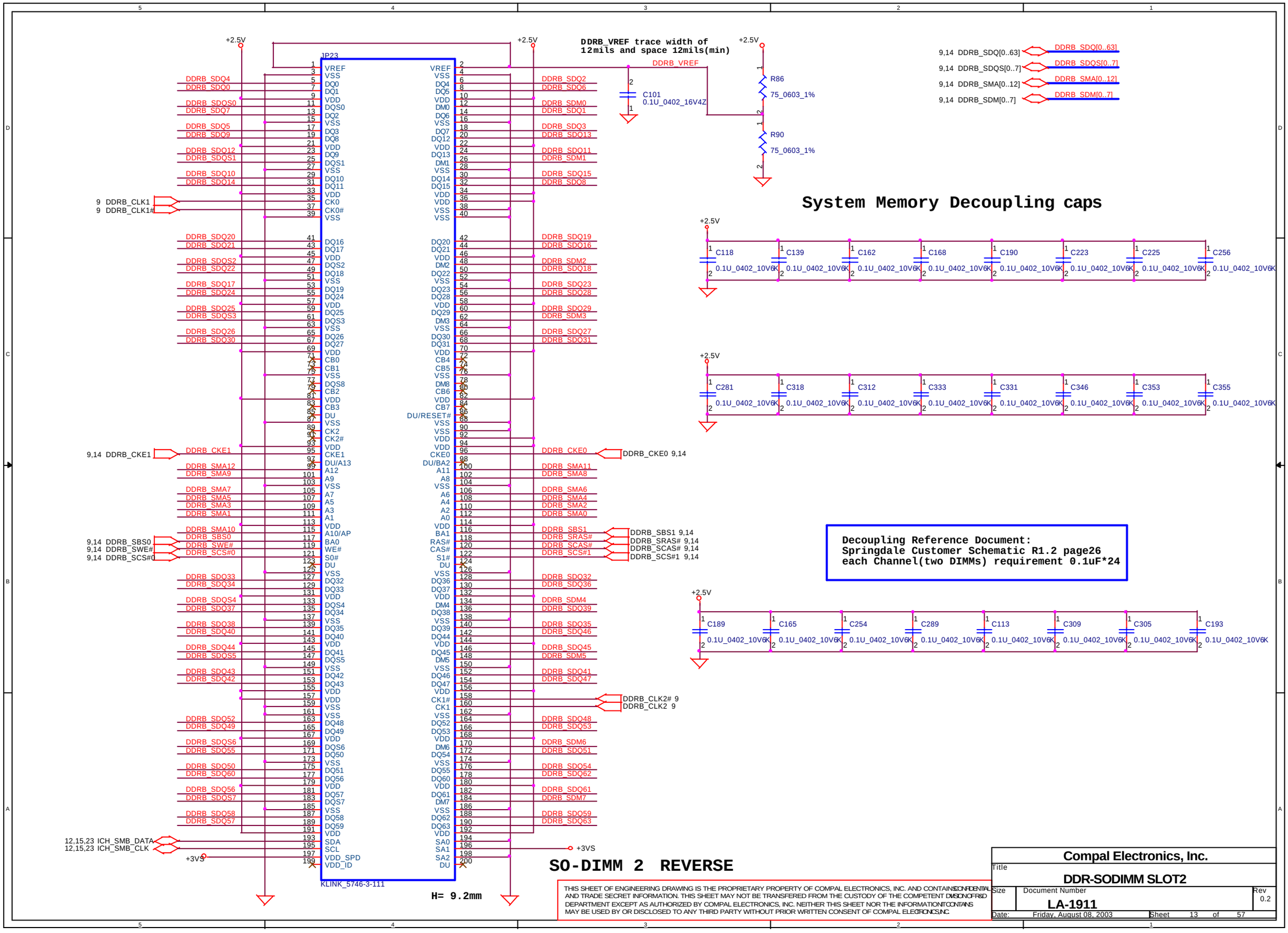

THIS SHEET OF ENGINEERING DRAWING IS THE PROPRIETARY PROPERTY OF COMPAL ELECTRONICS, INC. AND CONTAINS CONFIDENTIAL AND TRADE SECRET INFORMATION. THIS SHEET MAY NOT BE TRANSFERED FROM THE CUSTODY OF THE COMPETENT DIVISION OF R&D DEPARTMENT EXCEPT AS AUTHORIZED BY COMPAL ELECTRONICS, INC. NEITHER THIS SHEET NOR THE INFORMATION IT CONTAINS MAY BE USED BY OR DISCLOSED TO ANY THIRD PARTY WITHOUT PRIOR WRITTEN CONSENT OF COMPAL ELECTRONICS, INC.

Compal Electronics, Inc.	
Title	DDR-SODIMM SLOT2
Size	Document Number: LA-1911
Rev	0.2
Date: Friday, August 08, 2003	Sheet 13 of 57

Channel A(DIMM0) Termination resistors & Decoupling caps

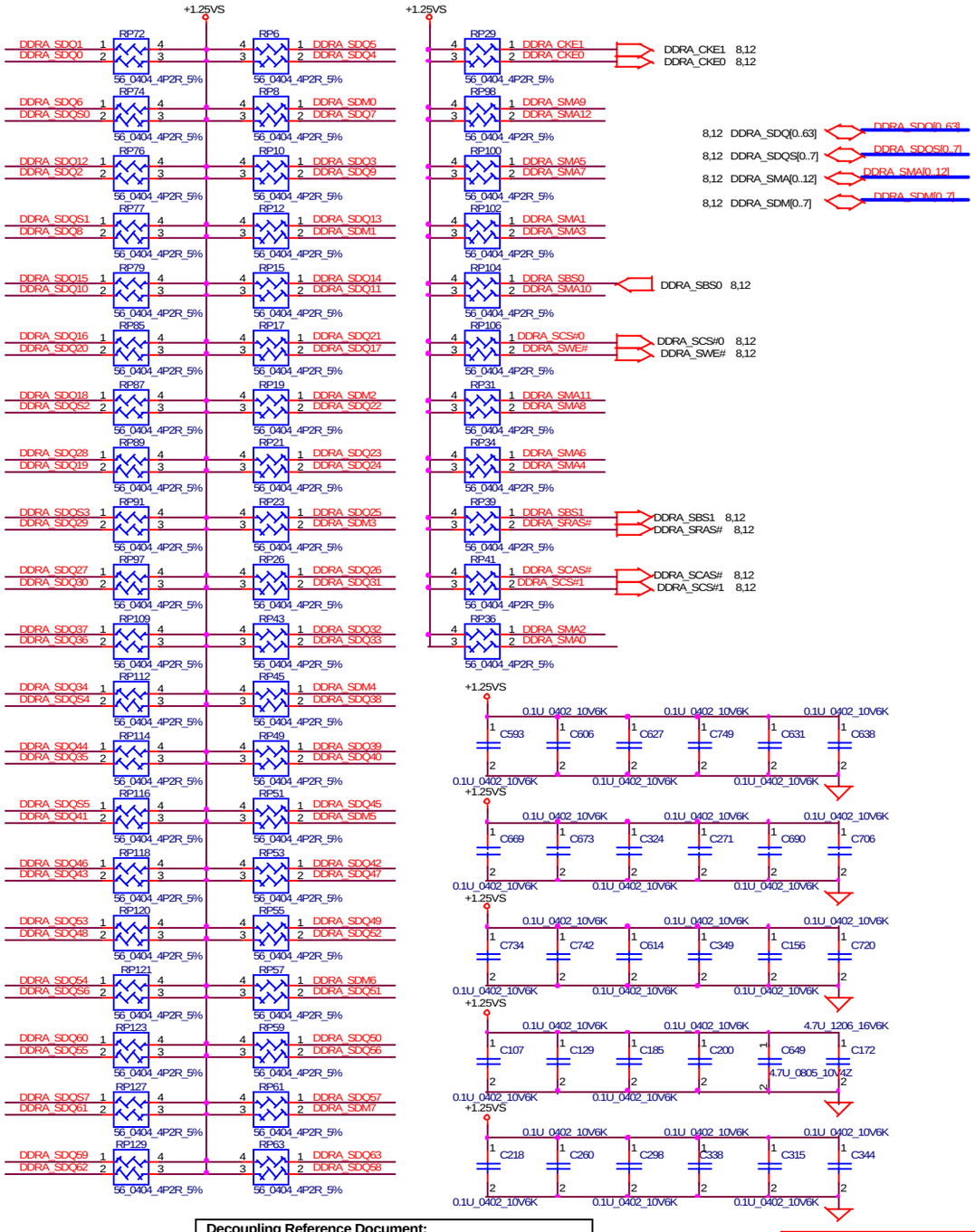

Decoupling Reference Document:
Springdale Customer Schematic R1.2 page22
each Channel(two DIMMs) requirement 4.7u*2 ; 0.1uF*28

Channel B(DIMM2) Termination resistors & Decoupling caps

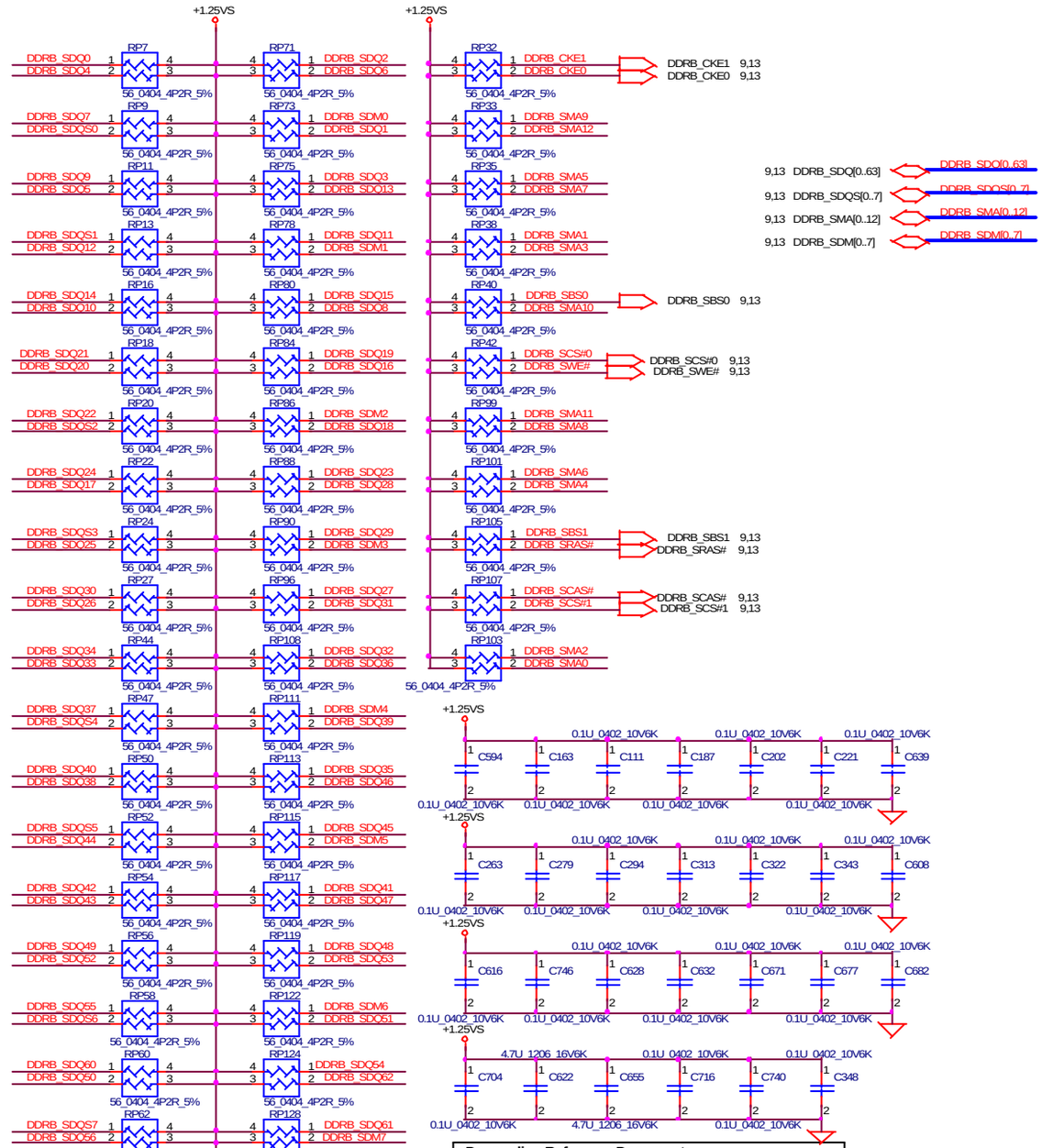

Decoupling Reference Document:
Springdale Customer Schematic R1.2 page26
each Channel(two DIMMs) requirement 4.7u*2 ; 0.1uF*26

THIS SHEET OF ENGINEERING DRAWING IS THE PROPRIETARY PROPERTY OF COMPAL ELECTRONICS, INC. AND CONTAINS CONFIDENTIAL AND TRADE SECRET INFORMATION. THIS SHEET MAY NOT BE TRANSFERED FROM THE CUSTODY OF THE COMPETENT DIVISION OF DEPARTMENT EXCEPT AS AUTHORIZED BY COMPAL ELECTRONICS, INC. NEITHER THIS SHEET NOR THE INFORMATION THEREON MAY BE USED BY OR DISCLOSED TO ANY THIRD PARTY WITHOUT PRIOR WRITTEN CONSENT OF COMPAL ELECTRONICS, INC.

Title	DDR Termination Resistors	
Size: Custom	Document Number: LA-1911	Rev: 0.2
Date: Friday, August 08, 2003	Sheet 14 of 57	

SEL0	SEL1	CPU	3V66[0..3]	REF0	REF1	SRC	USB/Dot
0	0	100	66	14.3	14.3	100/200	48
0	MID	REF	REF	REF	REF	REF	REF
0	1	200	66	14.3	14.3	100/200	48
1	0	133	66	14.3	14.3	100/200	48
1	1	166	66	14.3	14.3	100/200	48
1	MID	Hi-Z	Hi-Z	Hi-Z	Hi-Z	Hi-Z	Hi-Z

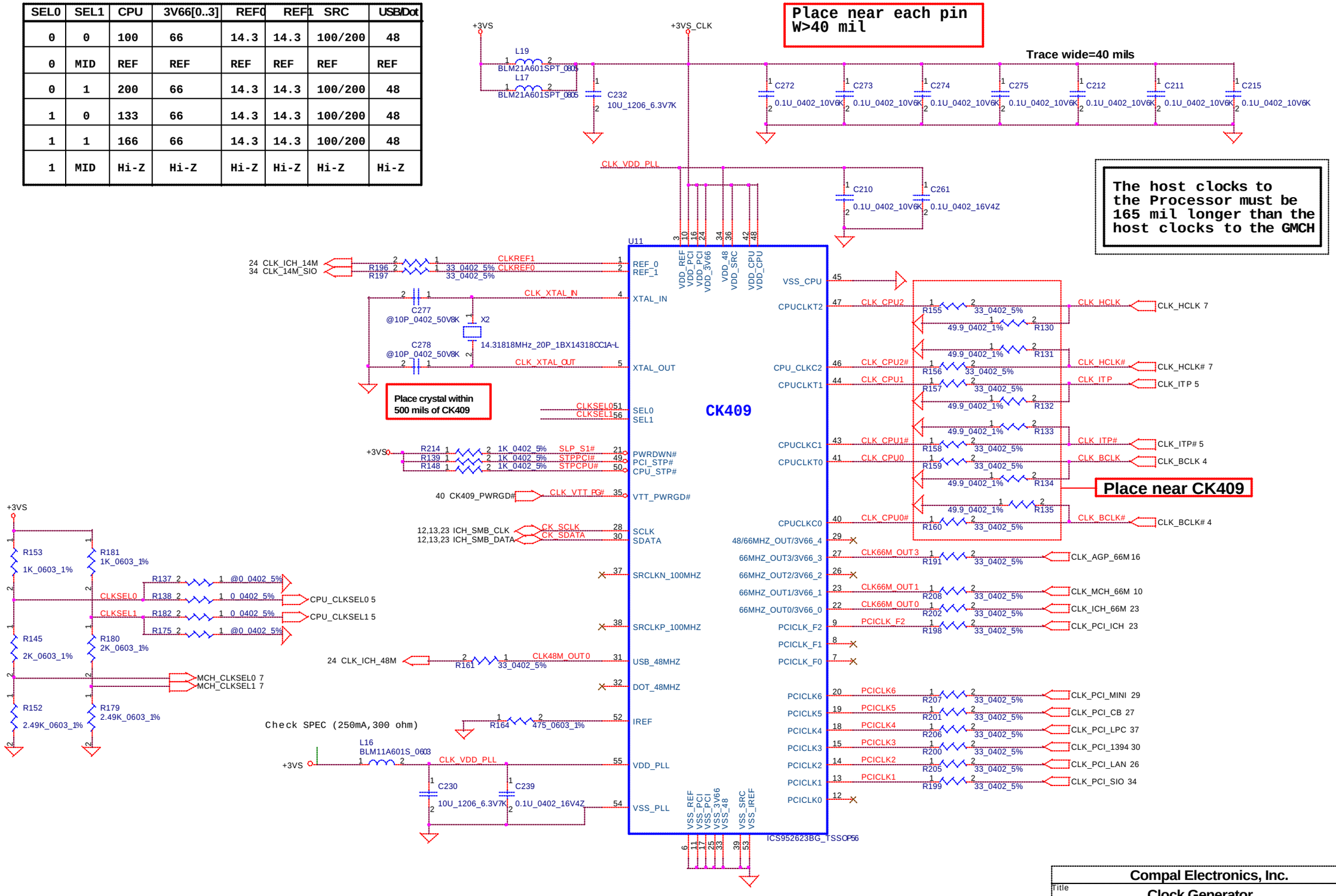

Compal Electronics, Inc.

Title: Clock Generator

Size | Document Number: LA-1911 | Rev: 0.2

Date: Friday, August 08, 2003 | Sheet 15 of 57

THIS SHEET OF ENGINEERING DRAWING IS THE PROPRIETARY PROPERTY OF COMPAL ELECTRONICS, INC. AND CONTAINS CONFIDENTIAL AND TRADE SECRET INFORMATION. THIS SHEET MAY NOT BE TRANSFERED FROM THE CUSTODY OF THE COMPETENT DIVISION OF R&D DEPARTMENT EXCEPT AS AUTHORIZED BY COMPAL ELECTRONICS, INC. NEITHER THIS SHEET NOR THE INFORMATION IT CONTAINS MAY BE USED BY OR DISCLOSED TO ANY THIRD PARTY WITHOUT PRIOR WRITTEN CONSENT OF COMPAL ELECTRONICS, INC.

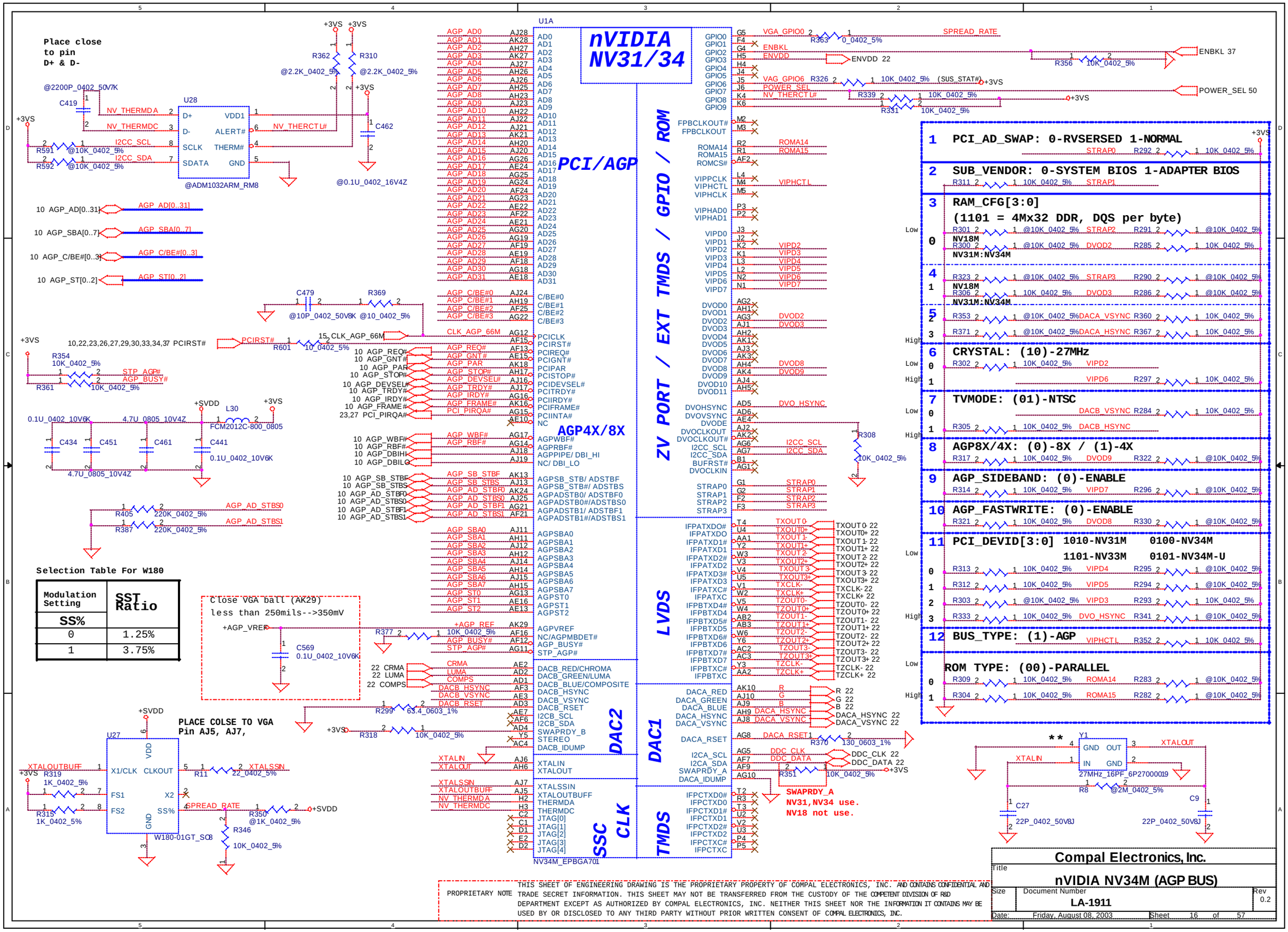

PROPRIETARY NOTE THIS SHEET OF ENGINEERING DRAWING IS THE PROPRIETARY PROPERTY OF COMPAL ELECTRONICS, INC. AND CONTAINS CONFIDENTIAL AND TRADE SECRET INFORMATION. THIS SHEET MAY NOT BE TRANSFERRED FROM THE CUSTODY OF THE COMPETENT DIVISION OF R&D DEPARTMENT EXCEPT AS AUTHORIZED BY COMPAL ELECTRONICS, INC. NEITHER THIS SHEET NOR THE INFORMATION IT CONTAINS MAY BE USED BY OR DISCLOSED TO ANY THIRD PARTY WITHOUT PRIOR WRITTEN CONSENT OF COMPAL ELECTRONICS, INC.

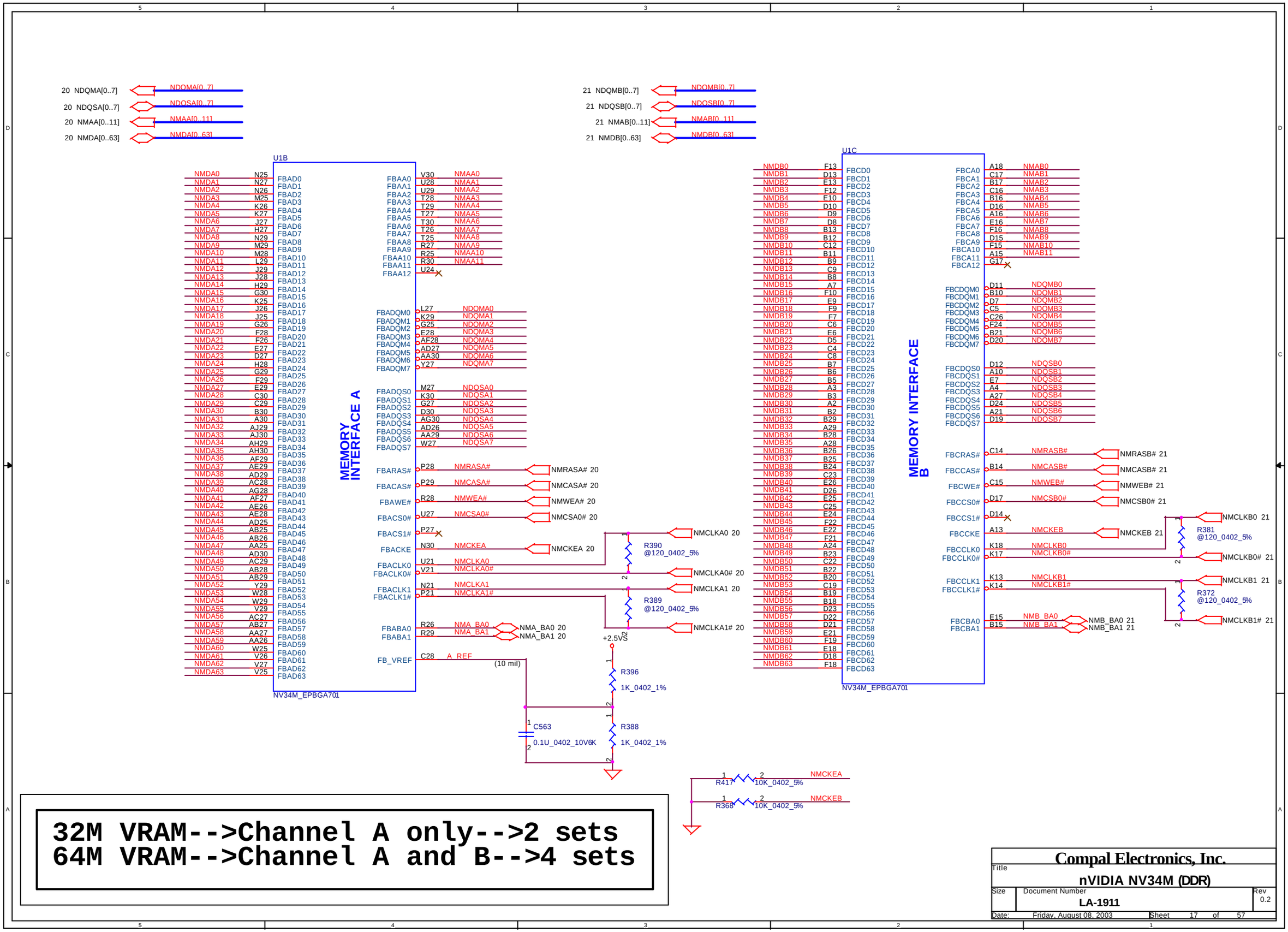

32M VRAM-->Channel A only-->2 sets
64M VRAM-->Channel A and B-->4 sets

Compal Electronics, Inc.		
Title: nVIDIA NV34M (DDR)		
Size	Document Number: LA-1911	Rev 0.2
Date: Friday, August 08, 2003	Sheet 17 of 57	

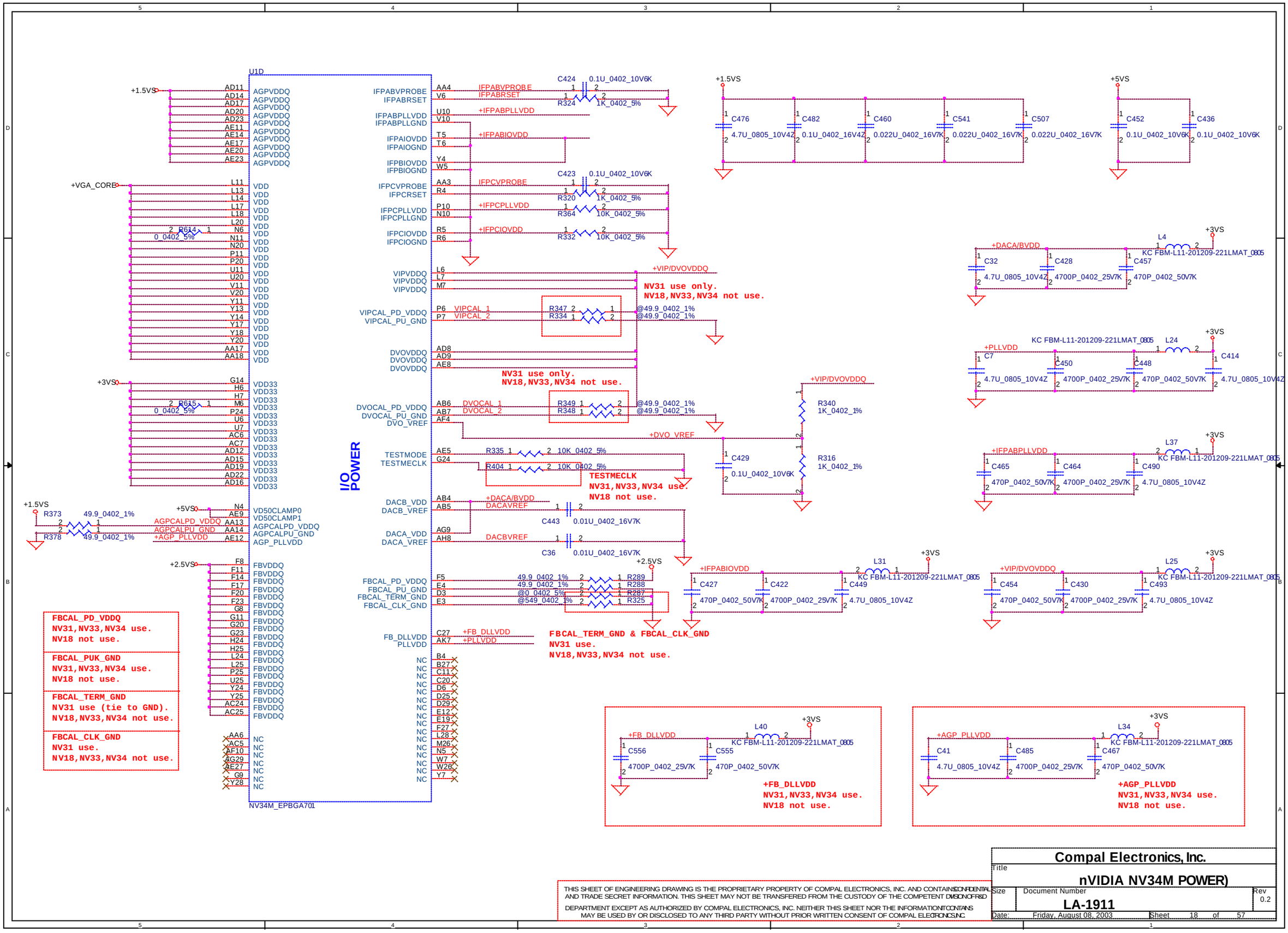

THIS SHEET OF ENGINEERING DRAWING IS THE PROPRIETARY PROPERTY OF COMPAL ELECTRONICS, INC. AND CONTAINS CONFIDENTIAL AND TRADE SECRET INFORMATION. THIS SHEET MAY NOT BE TRANSFERED FROM THE CUSTODY OF THE COMPETENT DIVISION OF R&D DEPARTMENT EXCEPT AS AUTHORIZED BY COMPAL ELECTRONICS, INC. NEITHER THIS SHEET NOR THE INFORMATION IT CONTAINS MAY BE USED BY OR DISCLOSED TO ANY THIRD PARTY WITHOUT PRIOR WRITTEN CONSENT OF COMPAL ELECTRONICS, INC.

Compal Electronics, Inc.	
Title	nVIDIA NV34M POWER)
Size	Document Number: LA-1911 — Rev 0.2
Date: Friday, August 08, 2003	Sheet 18 of 57

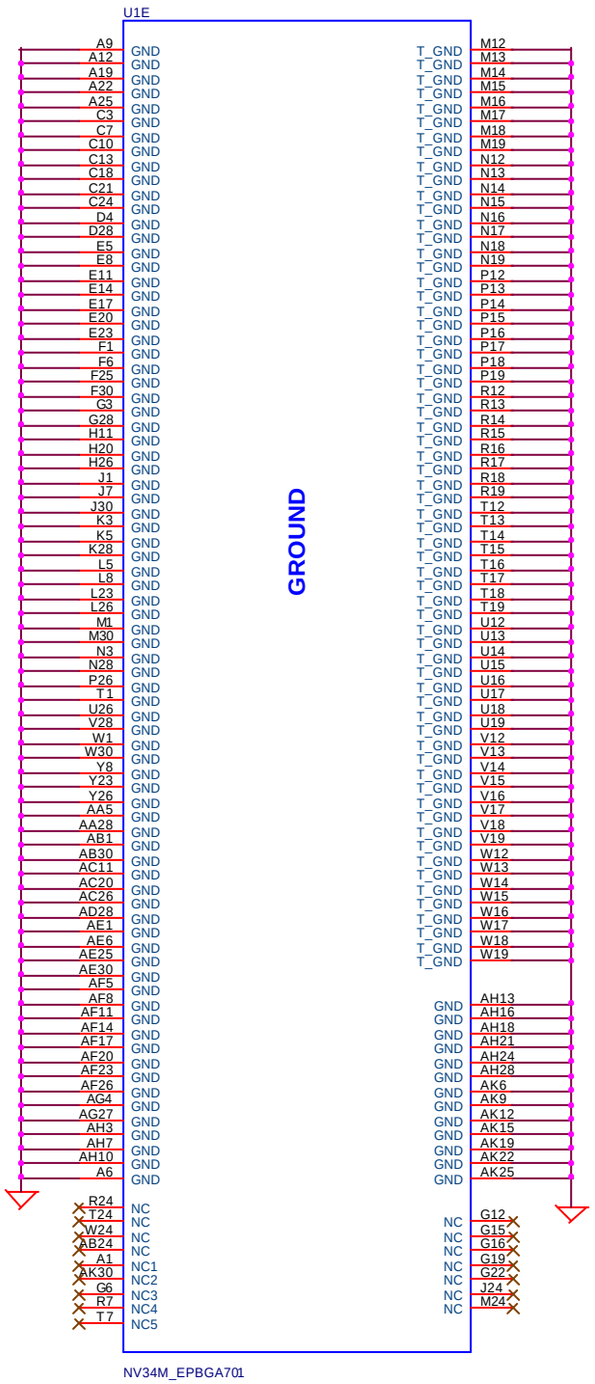

THIS SHEET OF ENGINEERING DRAWING IS THE PROPRIETARY PROPERTY OF COMPAL ELECTRONICS, INC. AND CONTAINS CONFIDENTIAL AND TRADE SECRET INFORMATION. THIS SHEET MAY NOT BE TRANSFERED FROM THE CUSTODY OF THE COMPETENT DIVISION OF R&D DEPARTMENT EXCEPT AS AUTHORIZED BY COMPAL ELECTRONICS, INC. NEITHER THIS SHEET NOR THE INFORMATION IT CONTAINS MAY BE USED BY OR DISCLOSED TO ANY THIRD PARTY WITHOUT PRIOR WRITTEN CONSENT OF COMPAL ELECTRONICS, INC.

Compal Electronics, Inc.	
Title	nVIDIA NV34M (DECOUPLING CAP)
Size	Document Number: LA-1911
Rev	0.2
Date: Friday, August 08, 2003	Sheet 19 of 57

As close as ppossible to relatedpin

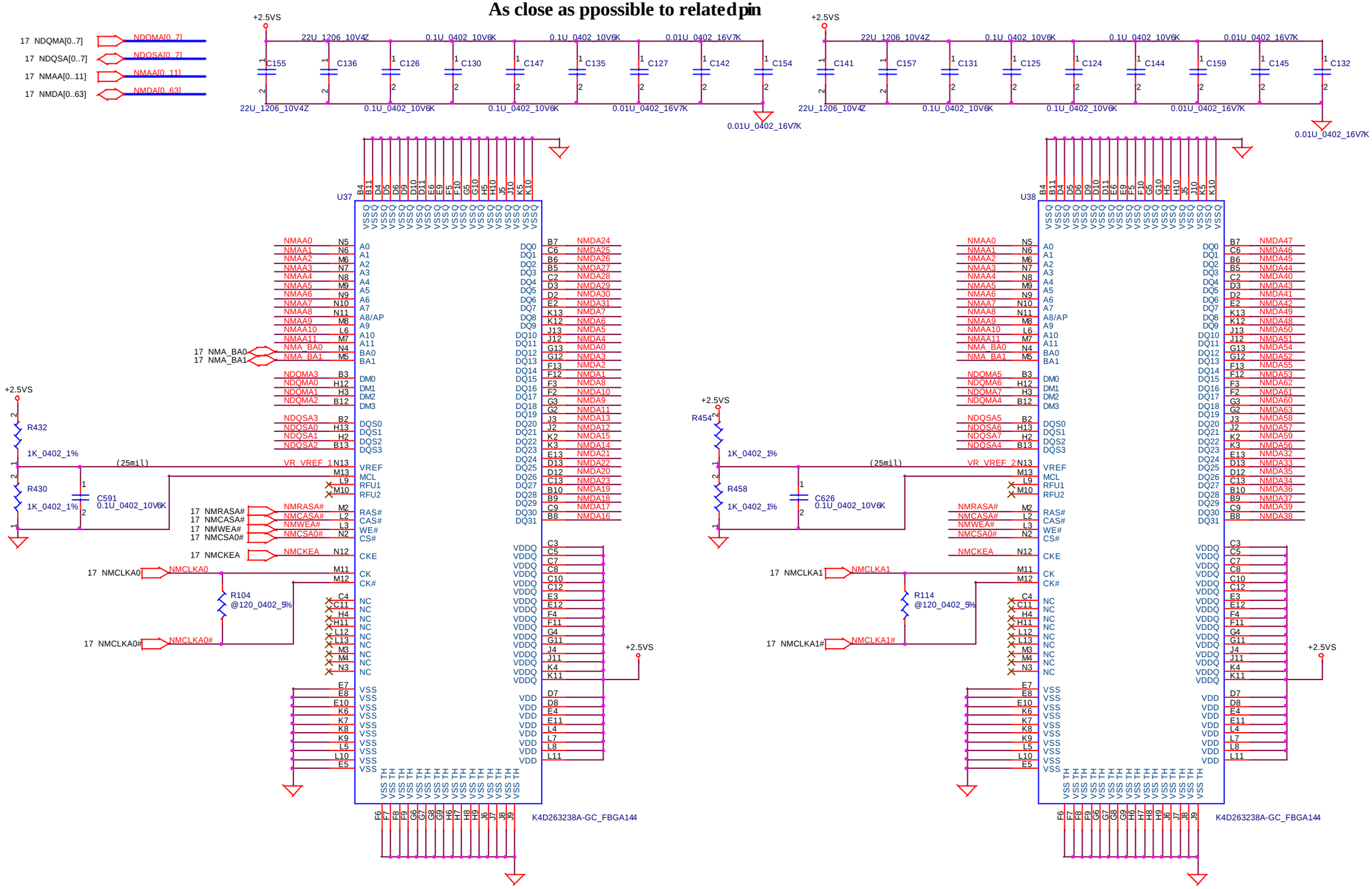

Compal Electronics, Inc.		
Title: VGA DDR FOR CHANNEL A		
Size	Document Number: LA-1911	Rev: 0.2
Date: Friday, August 08, 2003	Sheet 20 of 57	

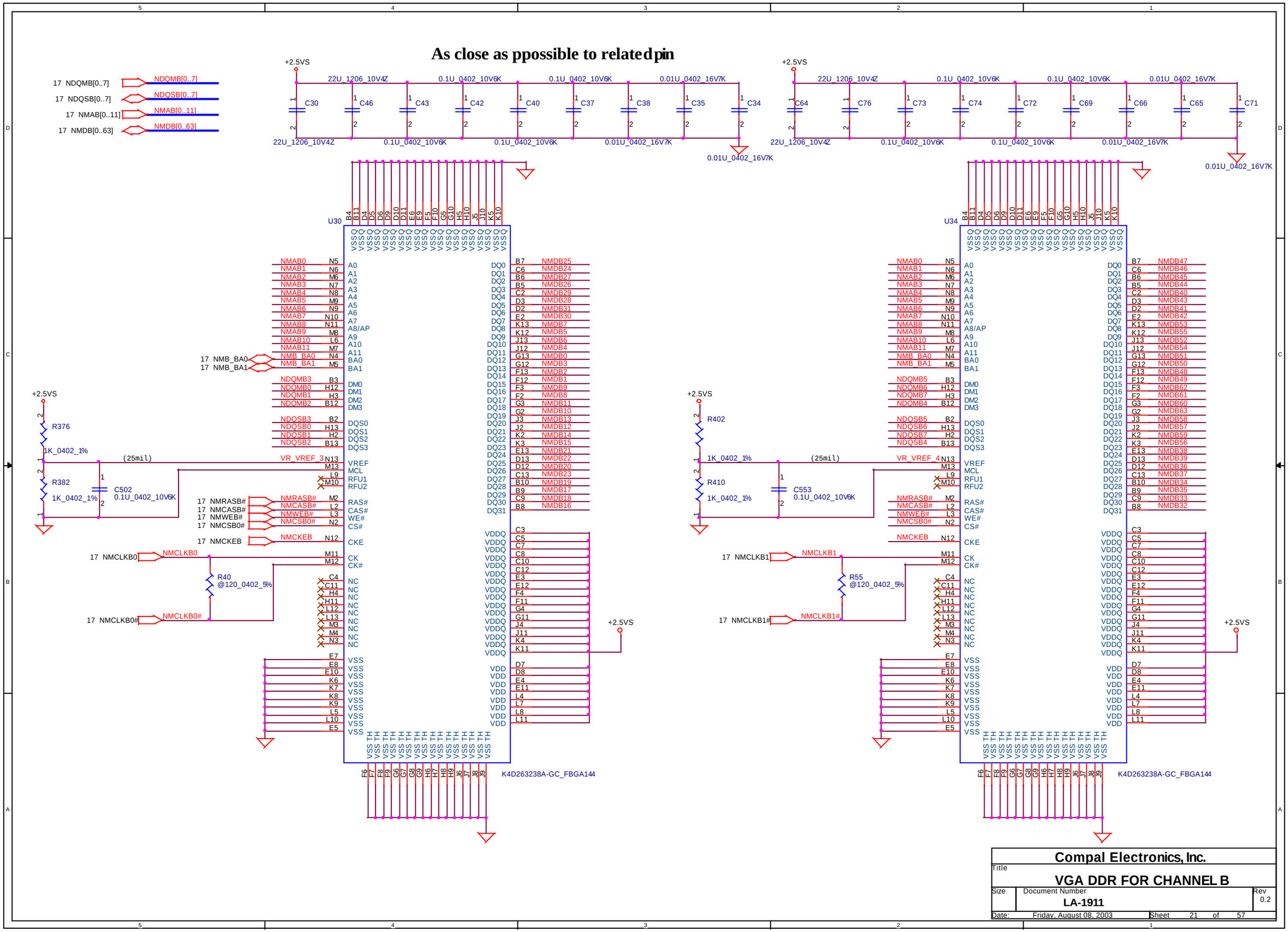
As close as ppossible to relatedpin
17 NDQMB[0..7]
17 NDQSB[0..7]
17 NMAB[0..11]
17 NMDB[0..63]
+2.5VS
22U_1206_10V4Z
0.1U_0402_10V6K
0.01U_0402_16V7K
U30
U34
K4D263238A-GC_FBGA144
17 NMB_BA0
17 NMB_BA1
R376
1K_0402_1%
R382
C502
0.1U_0402_10V6K
(25mil)
VR_VREF_3
VR_VREF_4
R402
R410
C553
17 NMRASB#
17 NMCASB#
17 NMWEB#
17 NMCSB0#
17 NMCKEB
17 NMCLKB0
17 NMCLKB0#
17 NMCLKB1
17 NMCLKB1#
R40
@120_0402_5%
R55
Compal Electronics, Inc.
Title
VGA DDR FOR CHANNEL B
Size
Document Number
LA-1911
Rev
0.2
Date: Friday, August 08, 2003
Sheet 21 of 57

CRT, TV-OUT & LVDS CONNECTOR

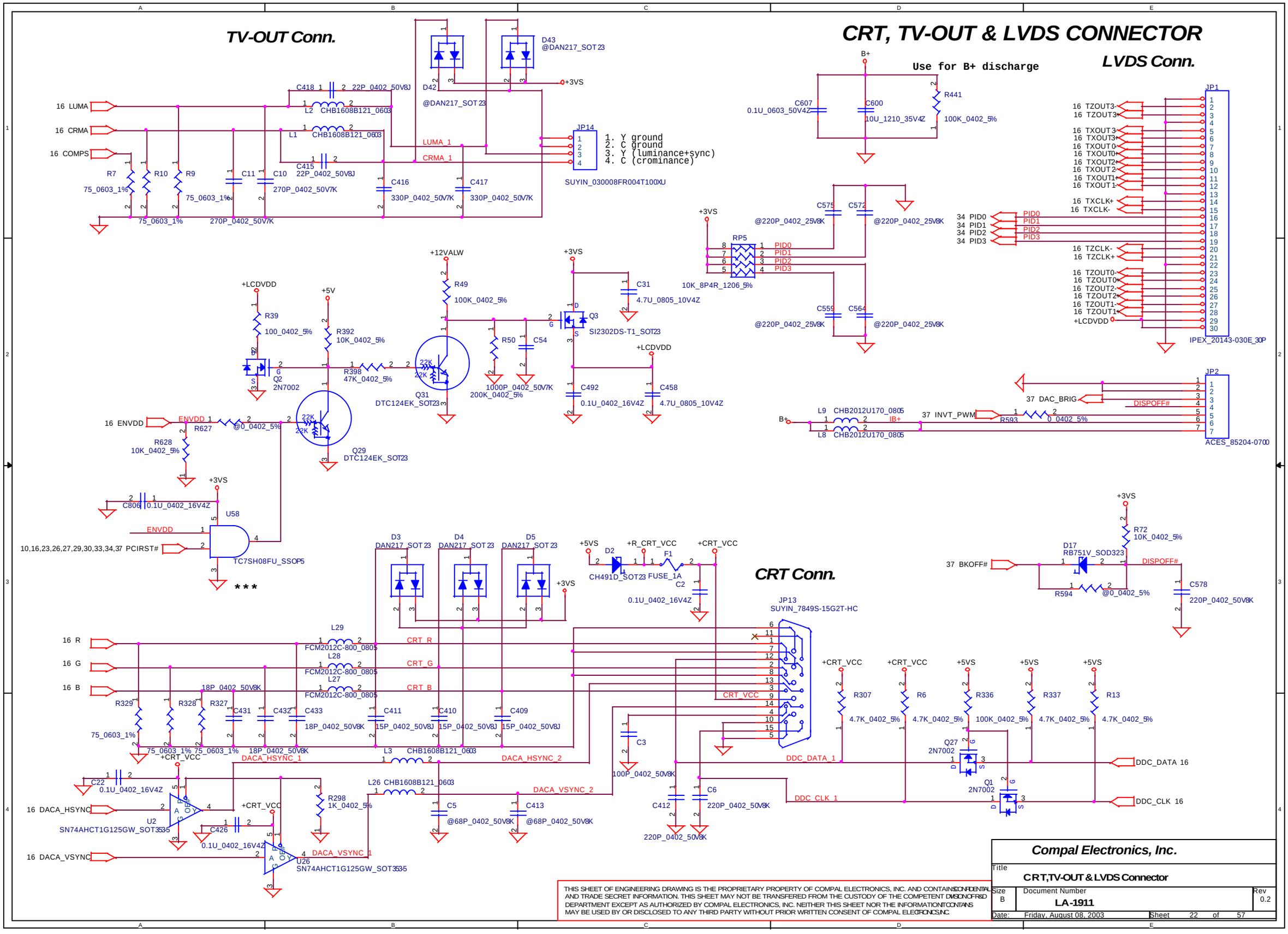

THIS SHEET OF ENGINEERING DRAWING IS THE PROPRIETARY PROPERTY OF COMPAL ELECTRONICS, INC. AND CONTAINS CONFIDENTIAL AND TRADE SECRET INFORMATION. THIS SHEET MAY NOT BE TRANSFERED FROM THE CUSTODY OF THE COMPETENT DIVISION OF R&D DEPARTMENT EXCEPT AS AUTHORIZED BY COMPAL ELECTRONICS, INC. NEITHER THIS SHEET NOR THE INFORMATION IT CONTAINS MAY BE USED BY OR DISCLOSED TO ANY THIRD PARTY WITHOUT PRIOR WRITTEN CONSENT OF COMPAL ELECTRONICS, INC.

Compal Electronics, Inc.

Title	CRT,TV-OUT & LVDS Connector	
Size B	Document Number LA-1911	Rev 0.2
Date: Friday, August 08, 2003	Sheet 22 of 57	

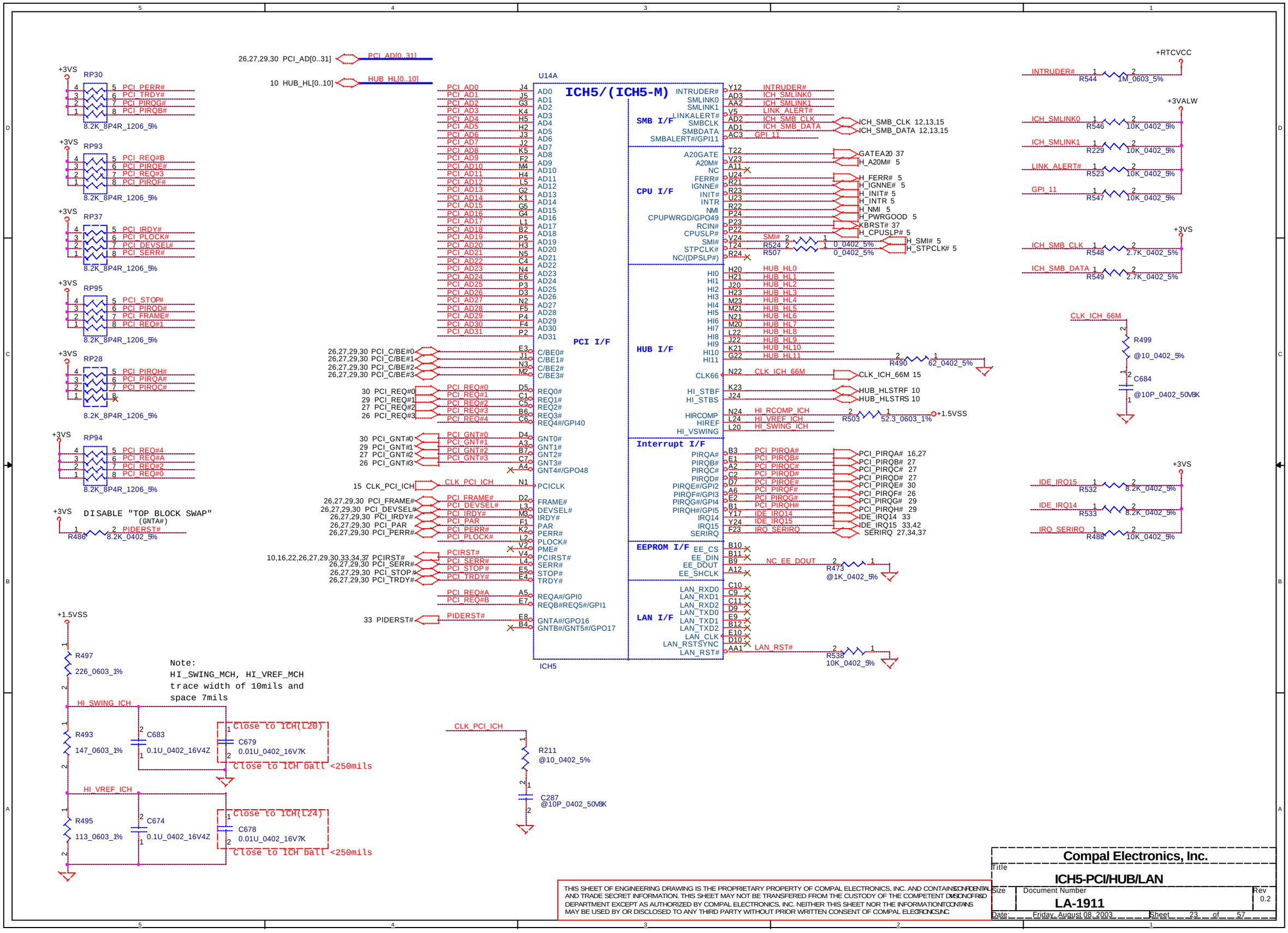

THIS SHEET OF ENGINEERING DRAWING IS THE PROPRIETARY PROPERTY OF COMPAL ELECTRONICS, INC. AND CONTAINS CONFIDENTIAL AND TRADE SECRET INFORMATION. THIS SHEET MAY NOT BE TRANSFERED FROM THE CUSTODY OF THE COMPETENT DIVISION OF R&D DEPARTMENT EXCEPT AS AUTHORIZED BY COMPAL ELECTRONICS, INC. NEITHER THIS SHEET NOR THE INFORMATION IT CONTAINS MAY BE USED BY OR DISCLOSED TO ANY THIRD PARTY WITHOUT PRIOR WRITTEN CONSENT OF COMPAL ELECTRONICS, INC.

Compal Electronics, Inc.

Title: **ICH5-PCI/HUB/LAN**

Size | Document Number: **LA-1911** | Rev: 0.2

Date: Friday, August 08, 2003 | Sheet 23 of 57

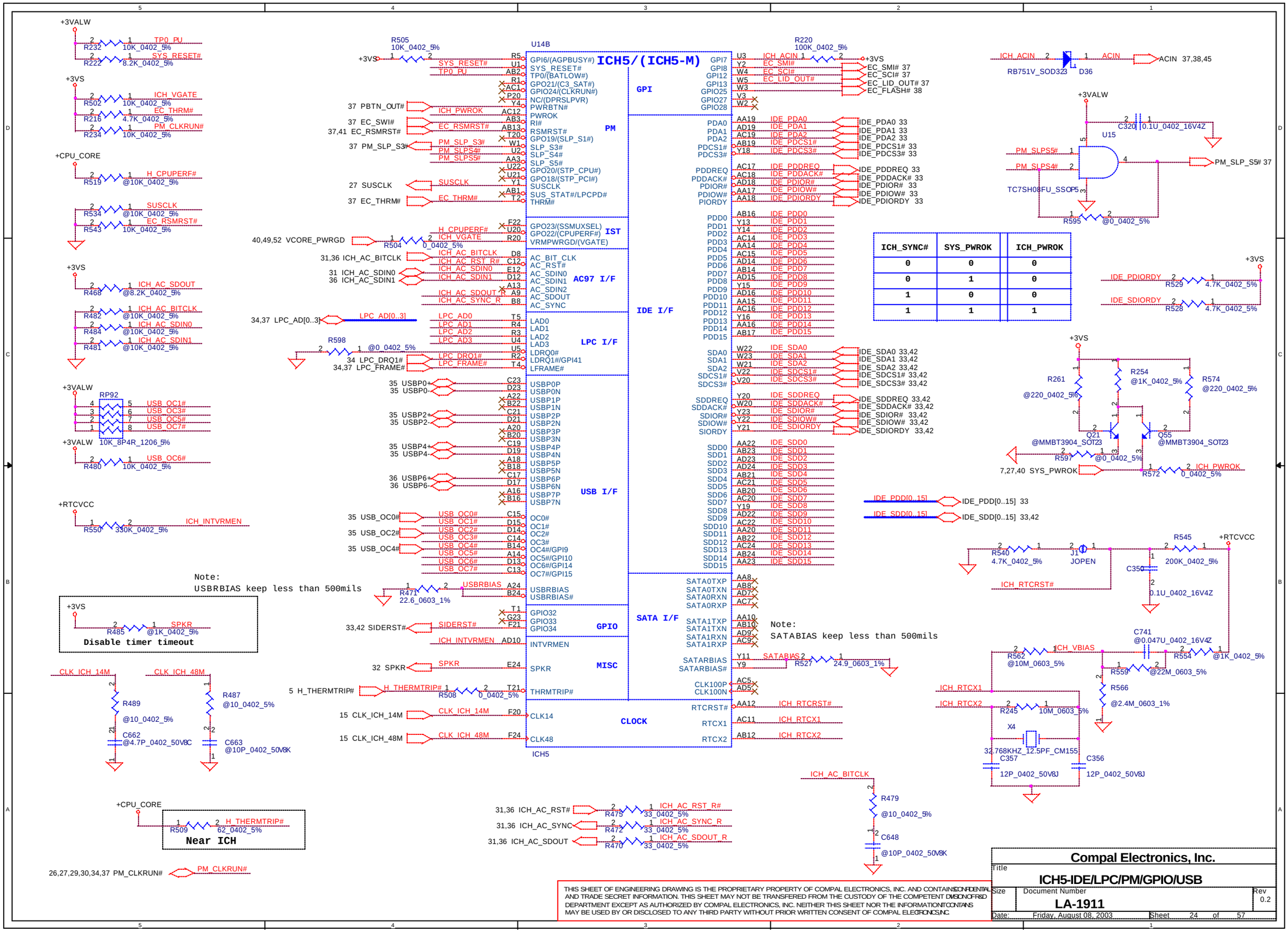

ICH_SYNC#	SYS_PWROK	ICH_PWROK
0	0	0
0	1	0
1	0	0
1	1	1

THIS SHEET OF ENGINEERING DRAWING IS THE PROPRIETARY PROPERTY OF COMPAL ELECTRONICS, INC. AND CONTAINS CONFIDENTIAL AND TRADE SECRET INFORMATION. THIS SHEET MAY NOT BE TRANSFERED FROM THE CUSTODY OF THE COMPETENT DIVISION OF R&D DEPARTMENT EXCEPT AS AUTHORIZED BY COMPAL ELECTRONICS, INC. NEITHER THIS SHEET NOR THE INFORMATION IT CONTAINS MAY BE USED BY OR DISCLOSED TO ANY THIRD PARTY WITHOUT PRIOR WRITTEN CONSENT OF COMPAL ELECTRONICS, INC.

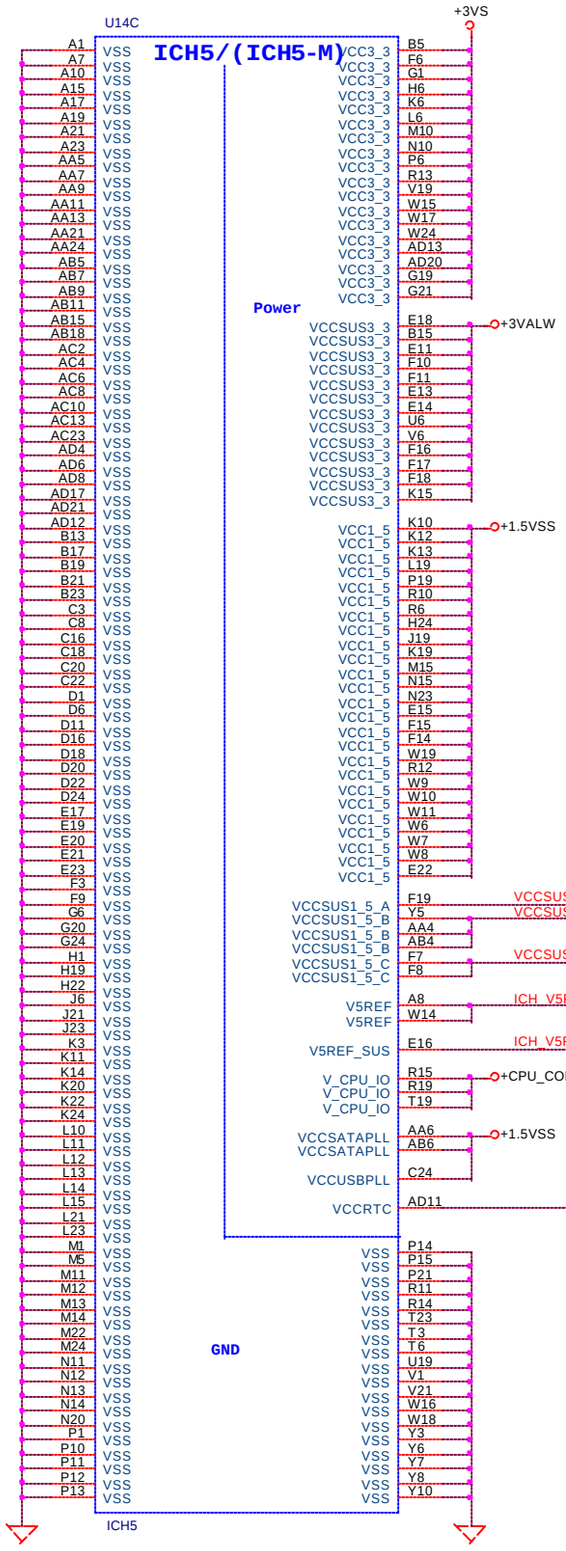

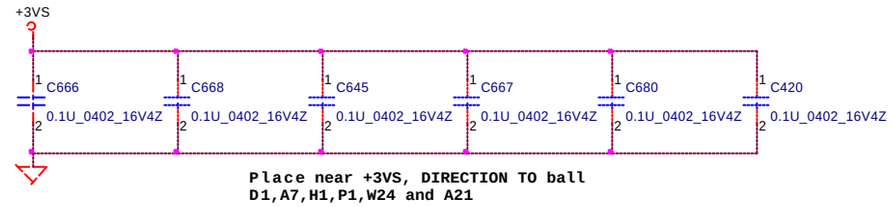

Place near +3VS, DIRECTION TO ball D1,A7,H1,P1,W24 and A21

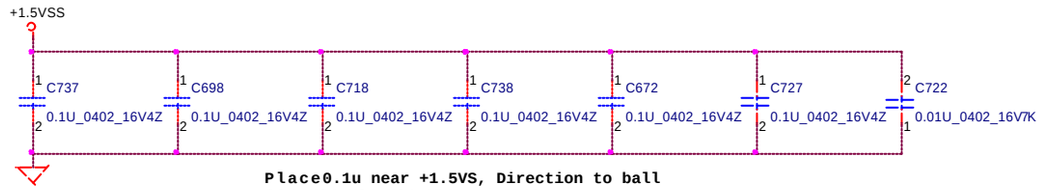

Place0.1u near +1.5VS, Direction to ball G24,H24,K24,M24,AD4 and AD18;
0.01u near +1.5VS, Direction to ball AD8.

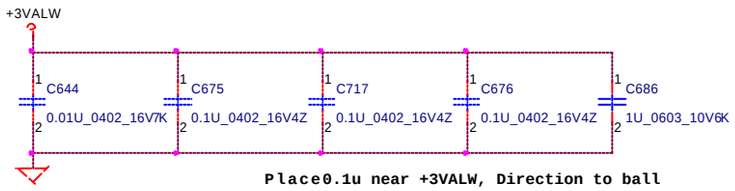

Place0.1u near +3VALW, Direction to ball A17,A23,V1.
Addition cap near A15,A19

Decoupling Reference Document:
Springdale Chipset Platform Design guide Rev1.2 (12837)page282

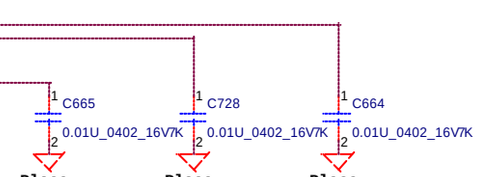

Place near F7, Direction to ball (VSS)A7

Place near AB4, Direction to ball (VSS)AD4

Place near F19, Direction to ball (VSS)A19

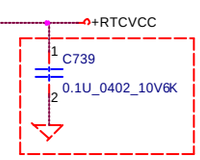

Place near ball AD11

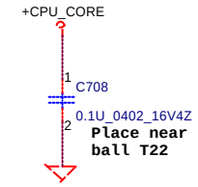

Place near ball T22

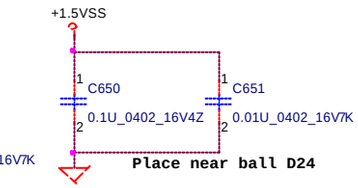

Place near ball D24

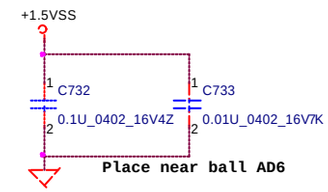

Place near ball AD6

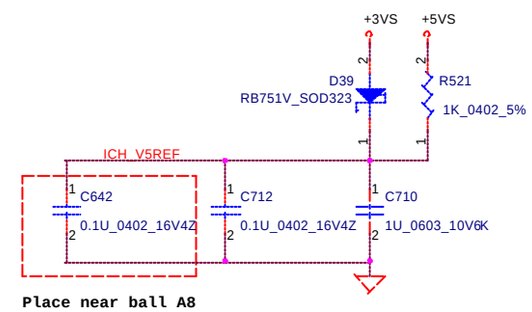

Place near ball A8

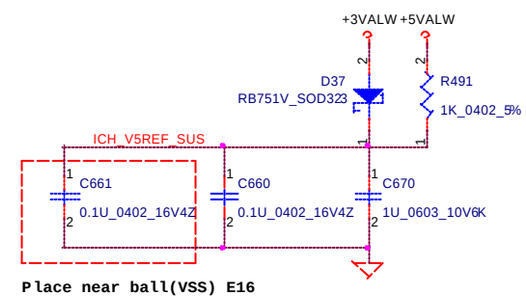

Place near ball(VSS) E16

THIS SHEET OF ENGINEERING DRAWING IS THE PROPRIETARY PROPERTY OF COMPAL ELECTRONICS, INC. AND CONTAINS CONFIDENTIAL AND TRADE SECRET INFORMATION. THIS SHEET MAY NOT BE TRANSFERED FROM THE CUSTODY OF THE COMPETENT DIVISION OF R&D DEPARTMENT EXCEPT AS AUTHORIZED BY COMPAL ELECTRONICS, INC. NEITHER THIS SHEET NOR THE INFORMATION IT CONTAINS MAY BE USED BY OR DISCLOSED TO ANY THIRD PARTY WITHOUT PRIOR WRITTEN CONSENT OF COMPAL ELECTRONICS, INC.

Compal Electronics, Inc.	
Title	ICH5 Power & Decoupling
Size	
Document Number	LA-1911
Rev	0.2
Date: Friday, August 08, 2003	Sheet 25 of 57

LAN Realtek RT8101L

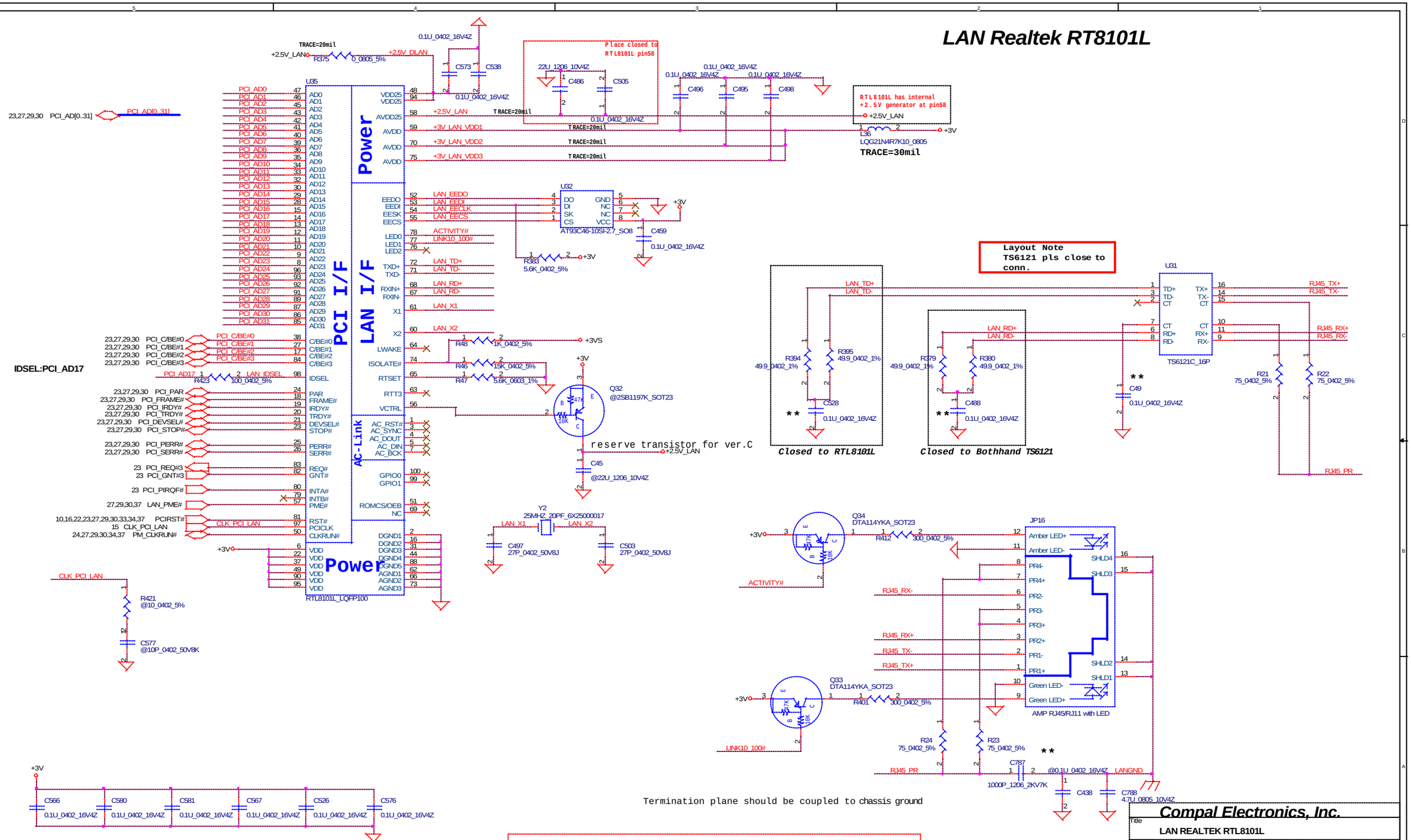

Termination plane should be coupled to chassis ground

THIS SHEET OF ENGINEERING DRAWING IS THE PROPRIETARY PROPERTY OF COMPAL ELECTRONICS, INC. AND CONTAINS CONFIDENTIAL AND TRADE SECRET INFORMATION. THIS SHEET MAY NOT BE TRANSFERED FROM THE CUSTODY OF THE COMPETENT DIVISION OR DEPARTMENT EXCEPT AS AUTHORIZED BY COMPAL ELECTRONICS, INC. NEITHER THIS SHEET NOR THE INFORMATION CONTAINED MAY BE USED BY OR DISCLOSED TO ANY THIRD PARTY WITHOUT PRIOR WRITTEN CONSENT OF COMPAL ELECTRONICS, INC.

Compal Electronics, Inc.

Title	LAN REALTEK RTL8101L
Size	Document Number: LA-1911 — Rev: 0.2
Date: Friday, August 08, 2003	Sheet 26 of 57

CardBus Controller T7L65XB (BGA) PCI/SD INTERFACE

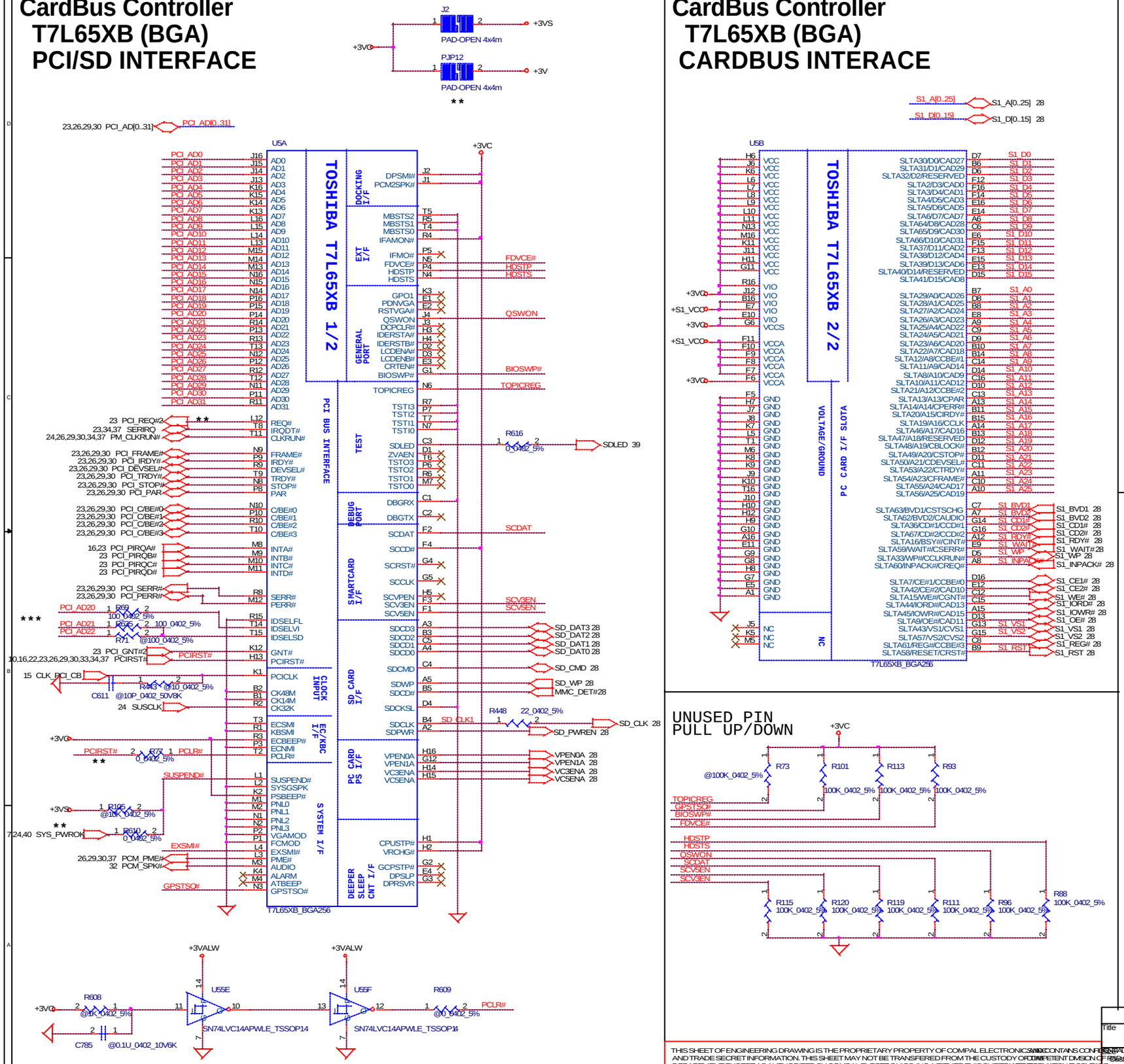

CardBus Controller T7L65XB (BGA) CARDBUS INTERACE

FUZZY SIGNAL RESERVED PULL UP/DOWN

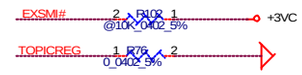

PC CARD PULL-UP REQUIREMENT BASE ON 16-BIT PC-CARD STANDARD R7 ELECTRICAL SPECIFICATION

UNUSED PIN PULL UP/DOWN

THIS SHEET OF ENGINEERING DRAWING IS THE PROPRIETARY PROPERTY OF COMPAL ELECTRONICS, INC. AND CONTAINS CONFIDENTIAL AND TRADE SECRET INFORMATION. THIS SHEET MAY NOT BE TRANSFERED FROM THE CUSTODY OF THE COMPETENT DIVISION OF R&D DEPARTMENT EXCEPT AS AUTHORIZED BY COMPAL ELECTRONICS, INC. NEITHER THIS SHEET NOR THE INFORMATION IT CONTAINS MAY BE USED BY OR DISCLOSED TO ANY THIRD PARTY WITHOUT PRIOR WRITTEN CONSENT OF COMPAL ELECTRONICS, INC.

Compal Electronics, Inc.

Title: CardBus Controller<T7L65XB>

Document Number: LA-1911

Rev: 0.2

Date: Friday, August 08, 2003 | Sheet 27 of 57

CARDBUS SOCKET

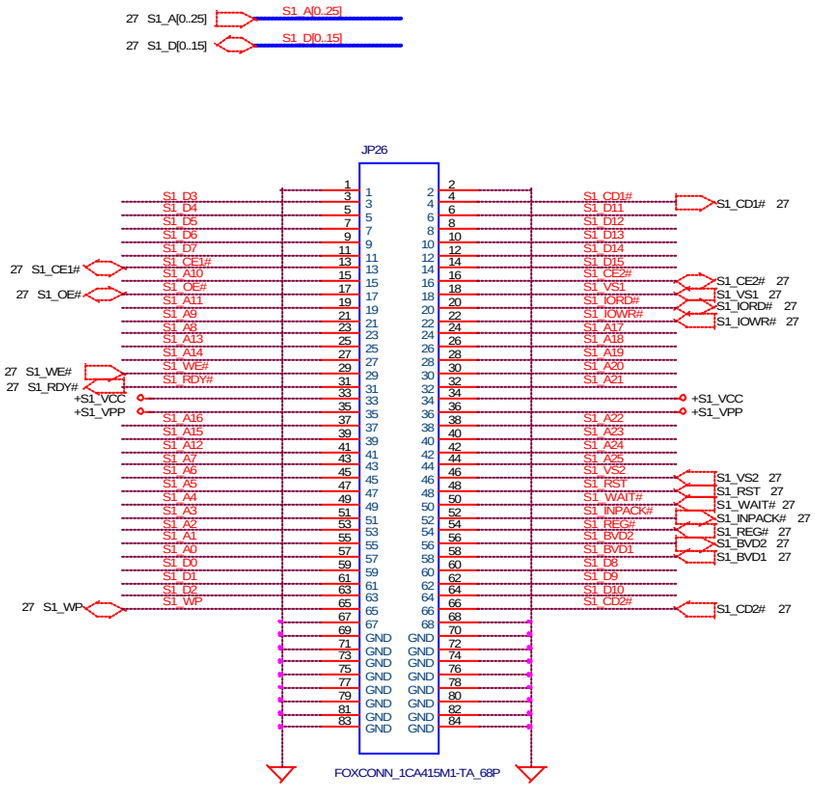

PCMCIA POWER CTRL.

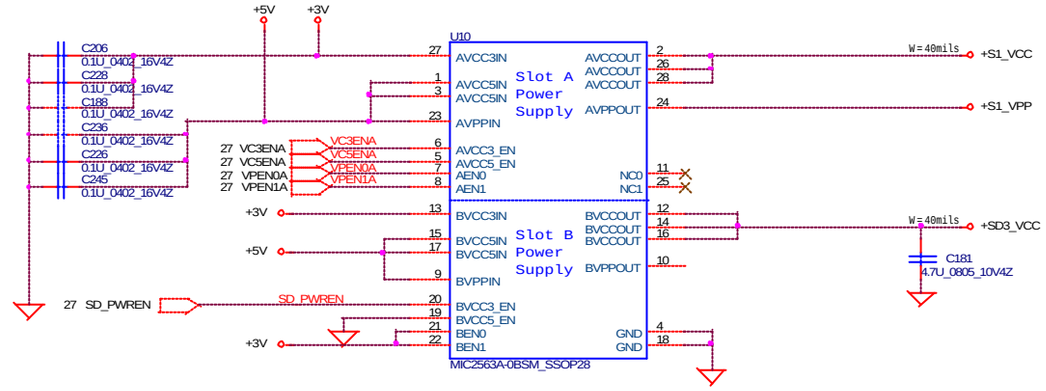

SD SOCKET

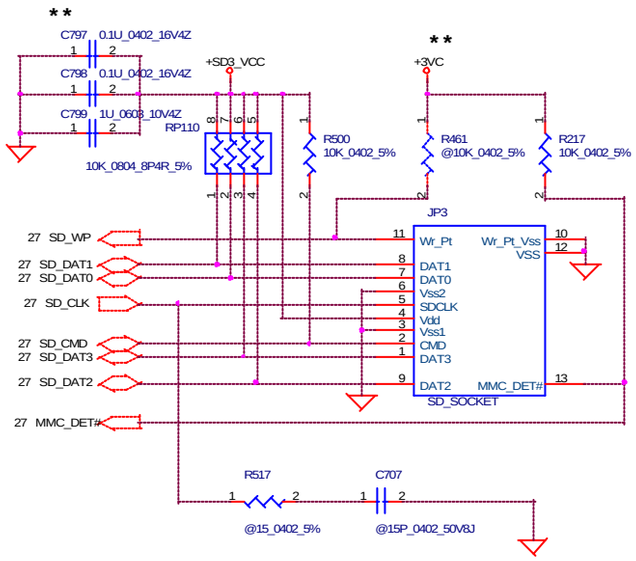

POWER SWITCH PIN PULL DOWN

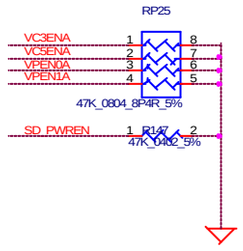

SLOT 1 VCC DECOUPLING

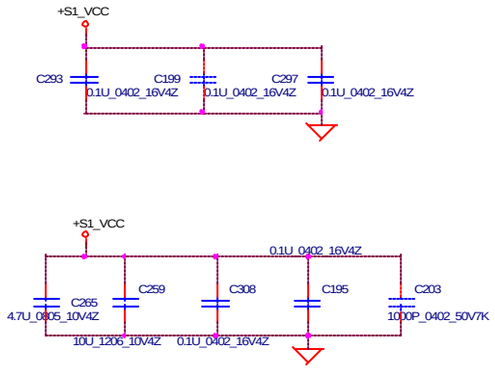

SLOT 1 VPP DECOUPLING

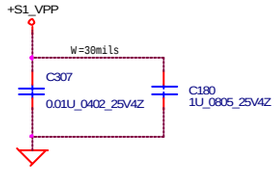

+3V DECOUPLING

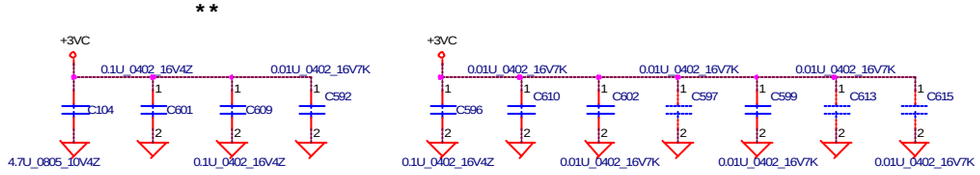

THIS SHEET OF ENGINEERING DRAWING IS THE PROPRIETARY PROPERTY OF COMPAL ELECTRONICS, INC. AND CONTAINS CONFIDENTIAL AND TRADE SECRET INFORMATION. THIS SHEET MAY NOT BE TRANSFERED FROM THE CUSTODY OF THE COMPETENT DIVISION OF R&D DEPARTMENT EXCEPT AS AUTHORIZED BY COMPAL ELECTRONICS, INC. NEITHER THIS SHEET NOR THE INFORMATION IT CONTAINS MAY BE USED BY OR DISCLOSED TO ANY THIRD PARTY WITHOUT PRIOR WRITTEN CONSENT OF COMPAL ELECTRONICS, INC

Compal Electronics, Inc.

Title	PCMCIA/SD SOCKET		
Size: Custom	Document Number: LA-1911		Rev: 0.2
Date: Friday, August 08, 2003	Sheet 28 of 57		

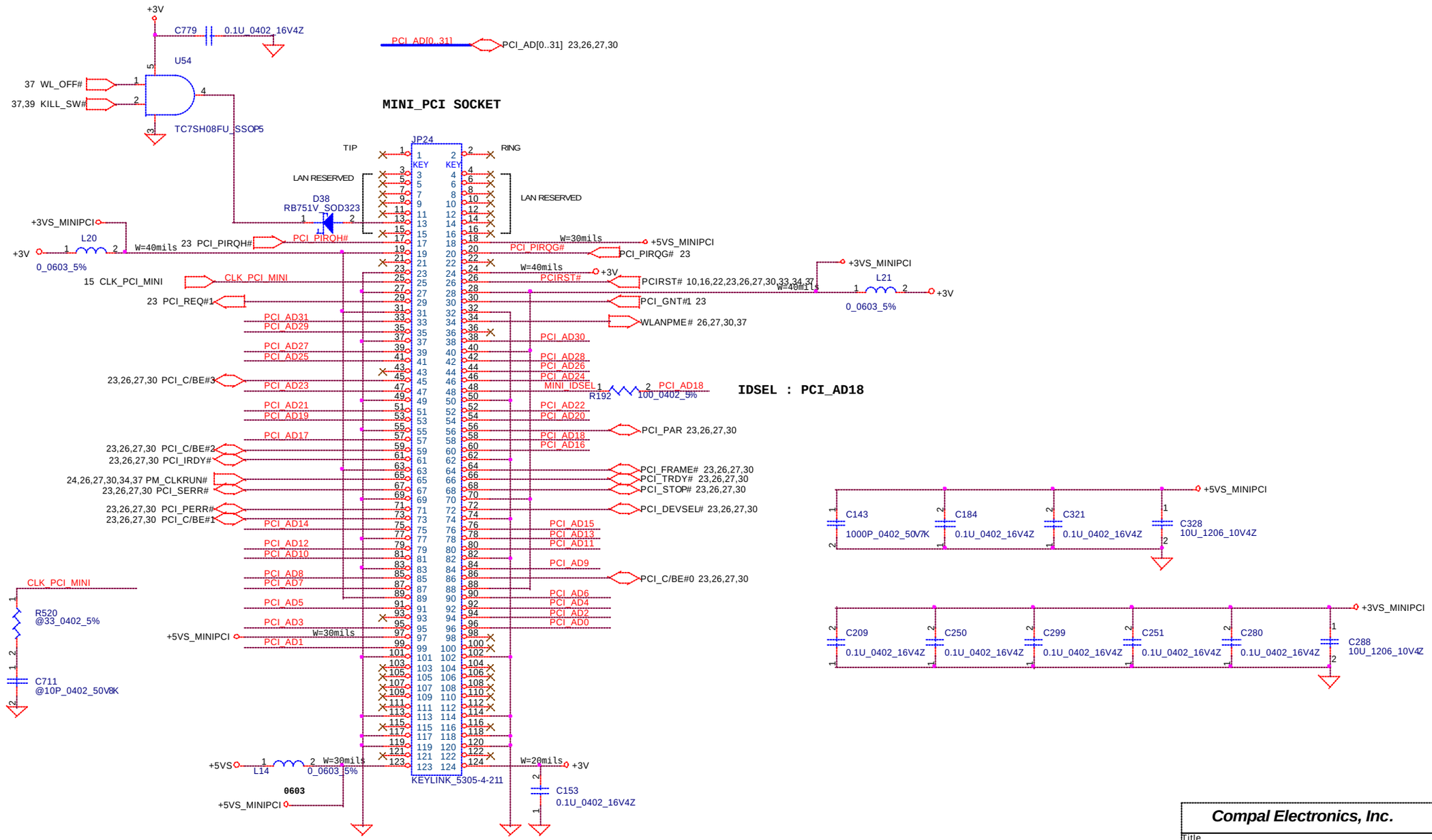

THIS SHEET OF ENGINEERING DRAWING IS THE PROPRIETARY PROPERTY OF COMPAL ELECTRONICS, INC. AND CONTAINS CONFIDENTIAL AND TRADE SECRET INFORMATION. THIS SHEET MAY NOT BE TRANSFERED FROM THE CUSTODY OF THE COMPETENT DIVISION OF R&D DEPARTMENT EXCEPT AS AUTHORIZED BY COMPAL ELECTRONICS, INC. NEITHER THIS SHEET NOR THE INFORMATION IT CONTAINS MAY BE USED BY OR DISCLOSED TO ANY THIRD PARTY WITHOUT PRIOR WRITTEN CONSENT OF COMPAL ELECTRONICS, INC.

Compal Electronics, Inc.

Title	MINI_PCI	
Size B	Document Number LA-1911	Rev 0.2
Date: Friday, August 08, 2003	Sheet 29 of 57	

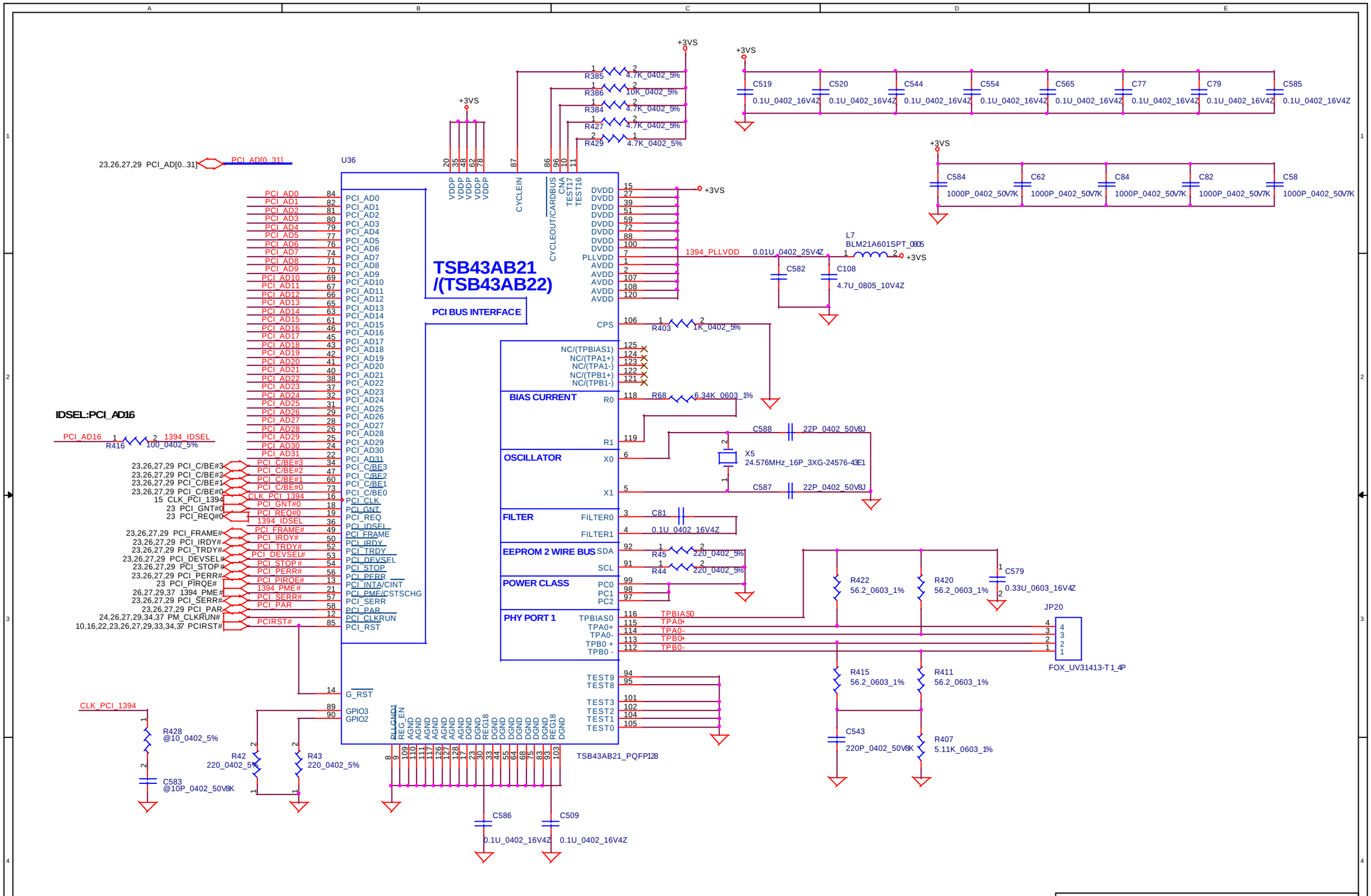

PROPRIETARY NOTE

THIS SHEET OF ENGINEERING DRAWING IS THE PROPRIETARY PROPERTY OF COMPAL ELECTRONICS, INC. AND CONTAINS CONFIDENTIAL AND TRADE SECRET INFORMATION. THIS SHEET MAY NOT BE TRANSFERRED FROM THE CUSTODY OF THE COMPETENT DIVISION OF R&D DEPARTMENT EXCEPT AS AUTHORIZED BY COMPAL ELECTRONICS, INC. NEITHER THIS SHEET NOR THE INFORMATION IT CONTAINS MAY BE USED BY OR DISCLOSED TO ANY THIRD PARTY WITHOUT PRIOR WRITTEN CONSENT OF COMPAL ELECTRONICS, INC.

Compal Electronics, Inc.

Title	**1394 Interface**	
Size B	Document Number **LA-1911**	Rev 0.2
Date: Friday, August 08, 2003	Sheet 30 of 57	

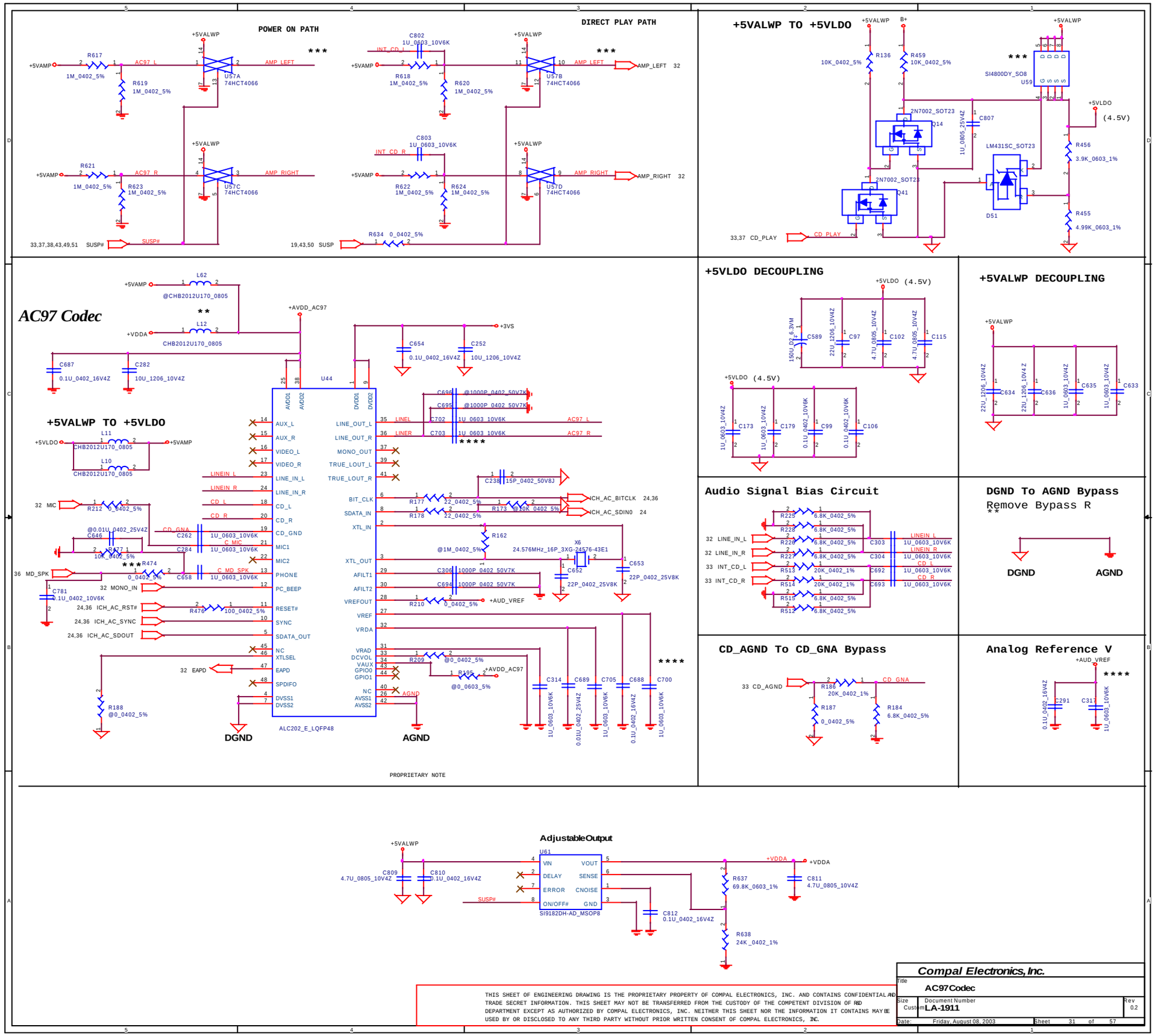
POWER ON PATH
DIRECT PLAY PATH
+5VALWP TO +5VLDO
AC97 Codec
+5VALWP TO +5VLDO
+5VLDO DECOUPLING
+5VALWP DECOUPLING
Audio Signal Bias Circuit
DGND To AGND Bypass
Remove Bypass R
CD_AGND To CD_GNA Bypass
Analog Reference V
AdjustableOutput
ALC202_E_LQFP48
SI9182DH-AD_MSOP8
DGND
AGND
PROPRIETARY NOTE
Compal Electronics, Inc.
AC97Codec
LA-1911
Friday, August 08, 2003
Sheet 31 of 57

Audio Amplifier

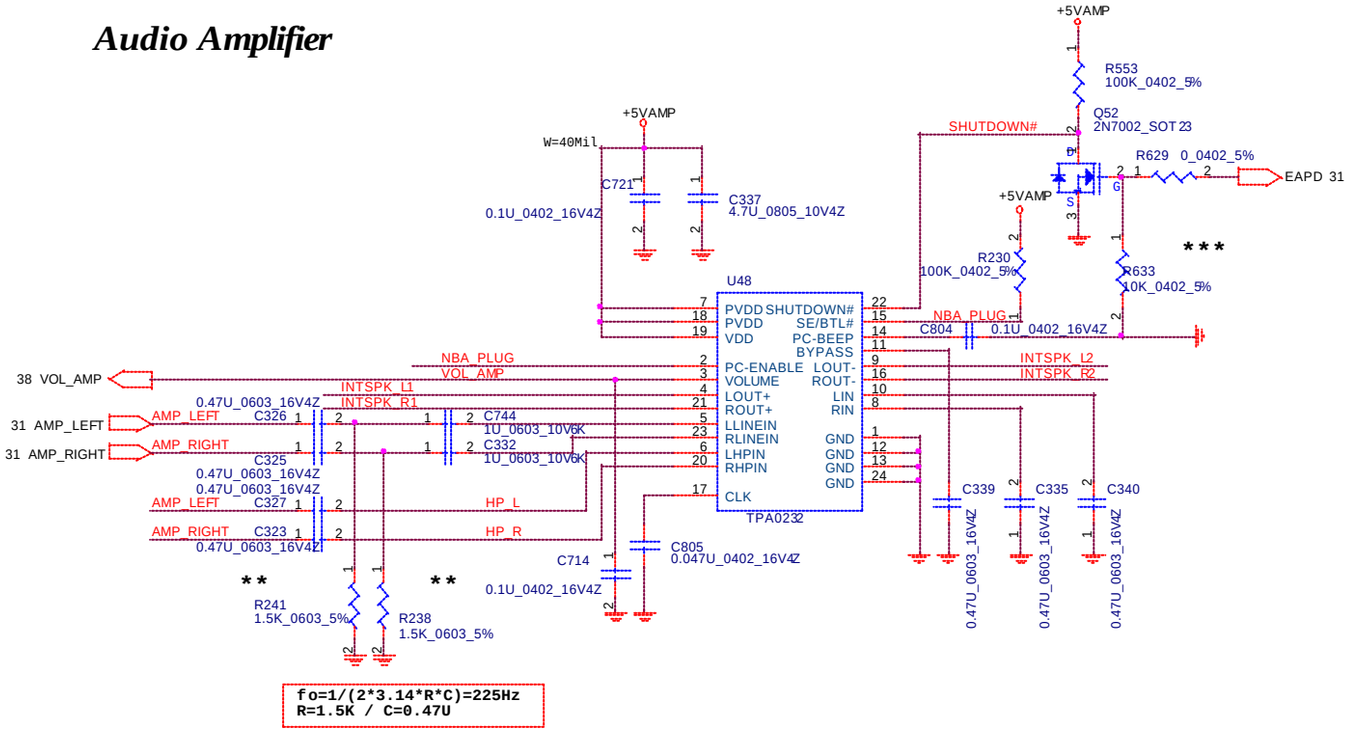

Left Speaker Connector

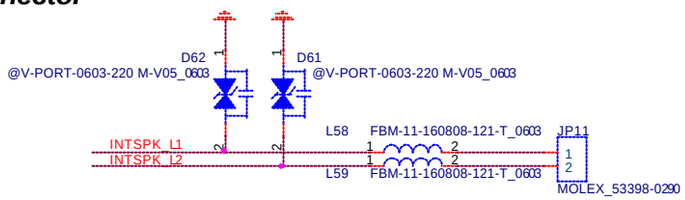

Right Speaker Connector

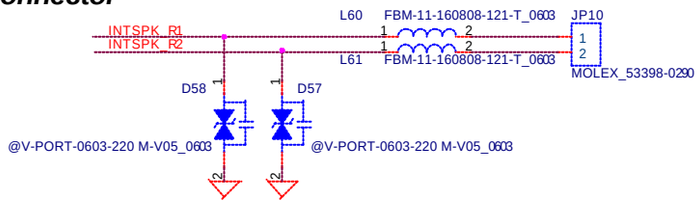

LINE IN JACK

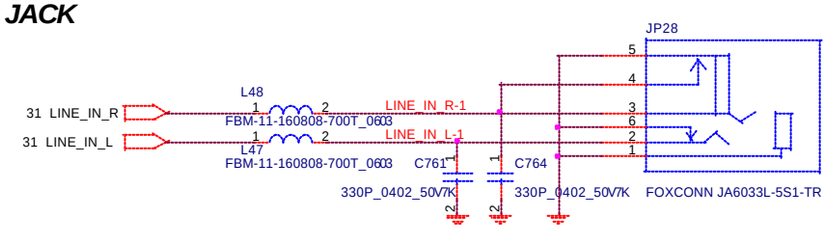

HEADPHONE OUT JACK

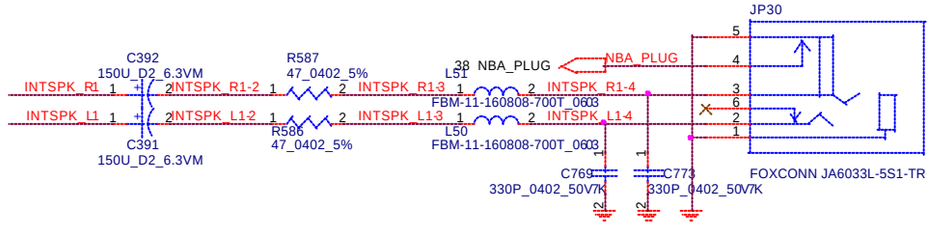

MICROPHONE IN JACK

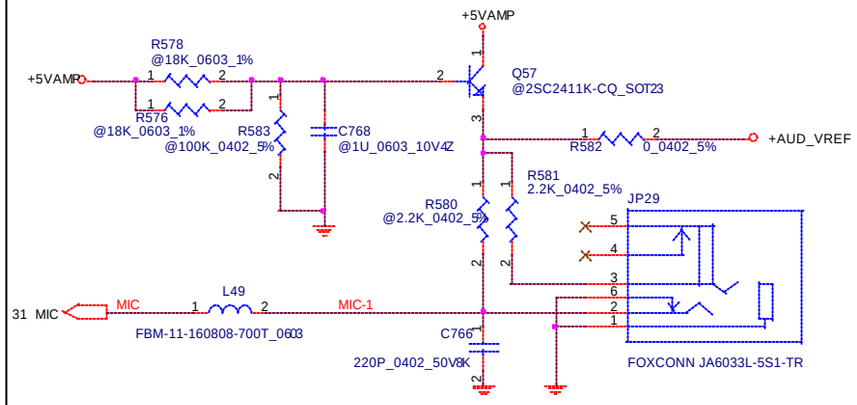

EC Beep

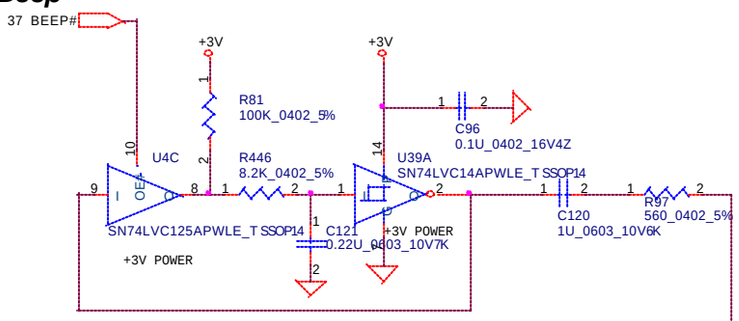

System Beep To AC97' Codec

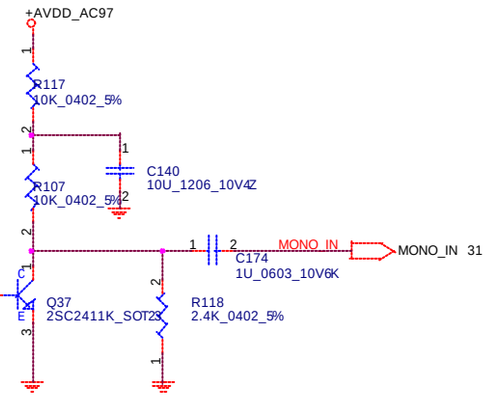

CardBus Beep

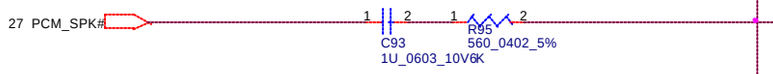

PCI Beep

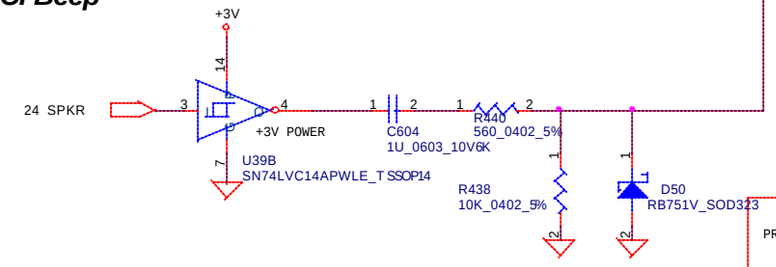

PROPRIETARY NOTE THIS SHEET OF ENGINEERING DRAWING IS THE PROPRIETARY PROPERTY OF COMPAL ELECTRONICS, INC. AND CONTAINS CONFIDENTIAL AND TRADE SECRET INFORMATION. THIS SHEET MAY NOT BE TRANSFERRED FROM THE CUSTODY OF THE COMPETENT DIVISION OF R&D DEPARTMENT EXCEPT AS AUTHORIZED BY COMPAL ELECTRONICS, INC. NEITHER THIS SHEET NOR THE INFORMATION IT CONTAINS MAY BE USED BY OR DISCLOSED TO ANY THIRD PARTY WITHOUT PRIOR WRITTEN CONSENT OF COMPAL ELECTRONICS, INC.

Compal Electronics, Inc.

Title: AMP & Audio Jack		
Size: Custom	Document Number: LA-1911	Rev: 0.2
Date: Friday, August 08, 2003	Sheet 32 of 57	

HDD CONNECTOR

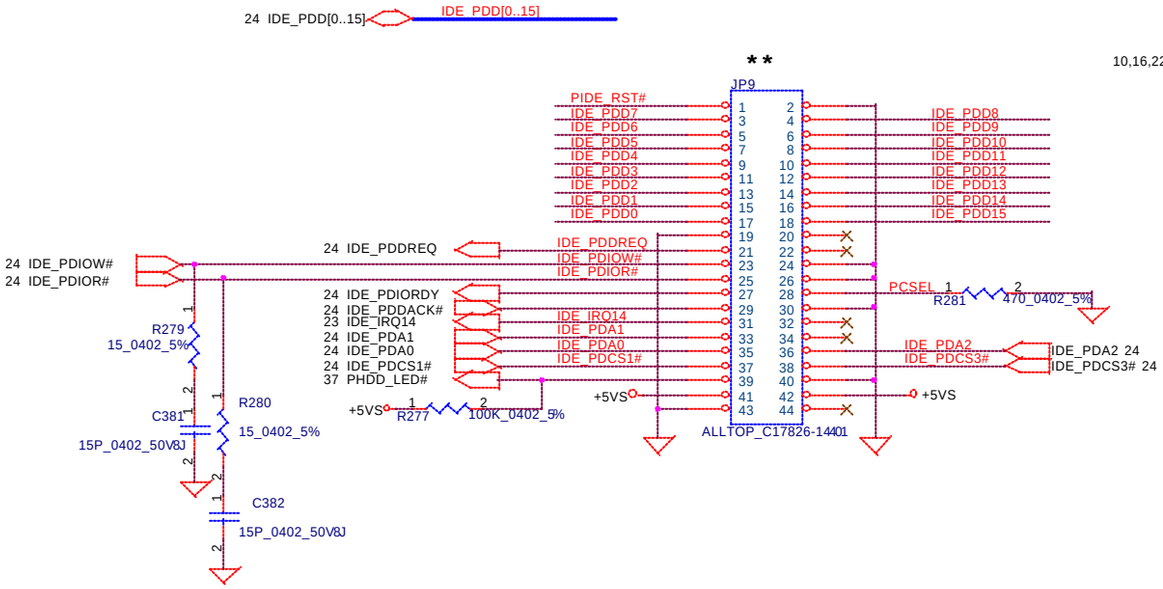

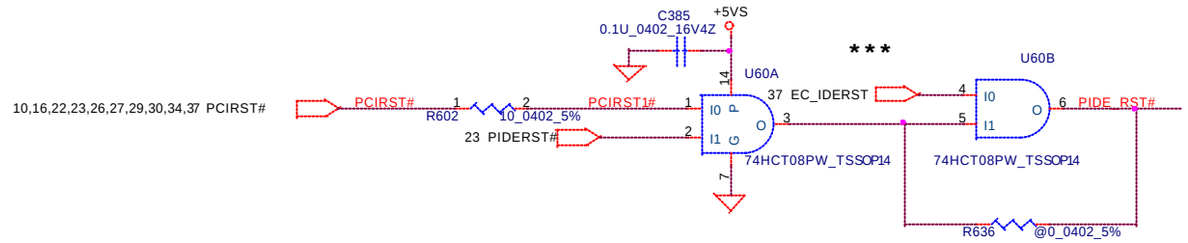

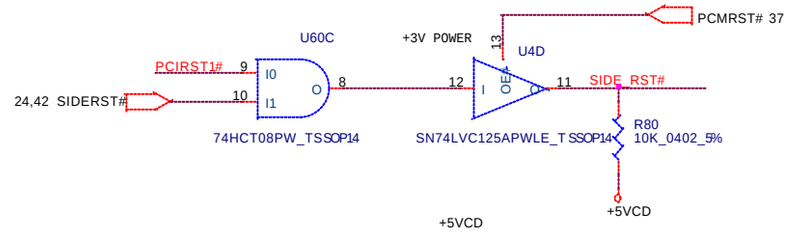

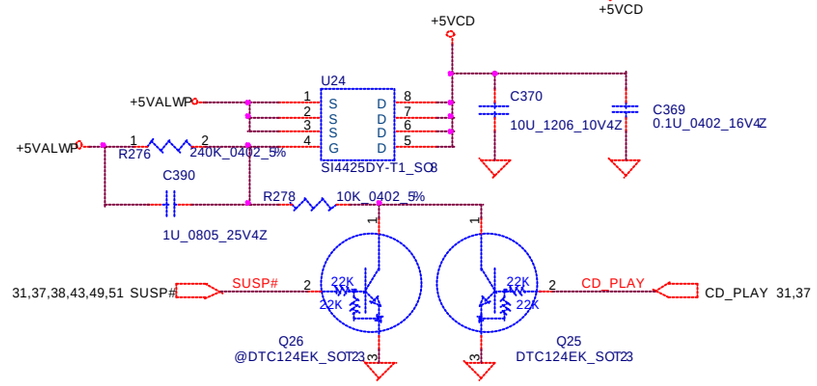

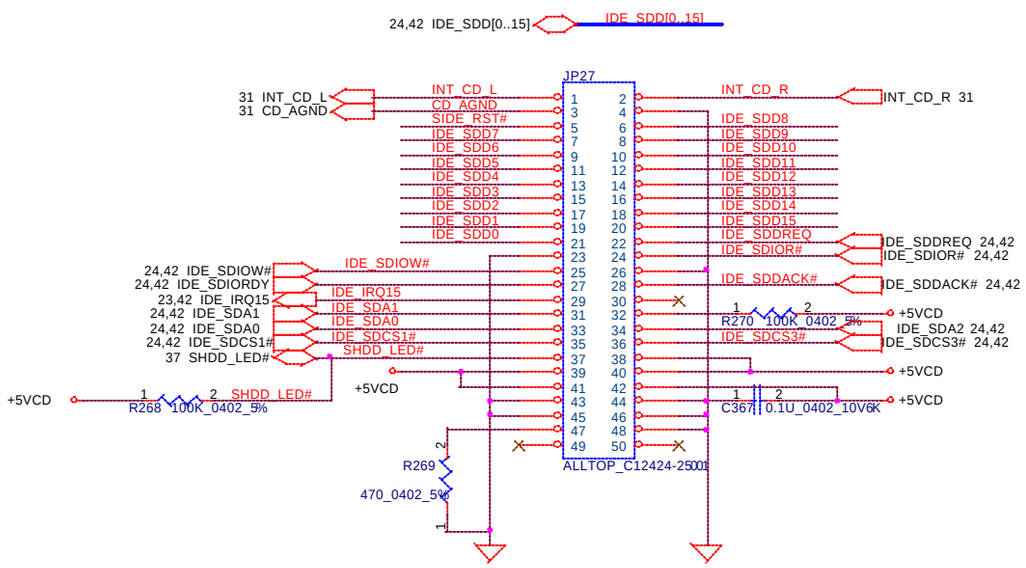

Placea caps. near HDD CONN.

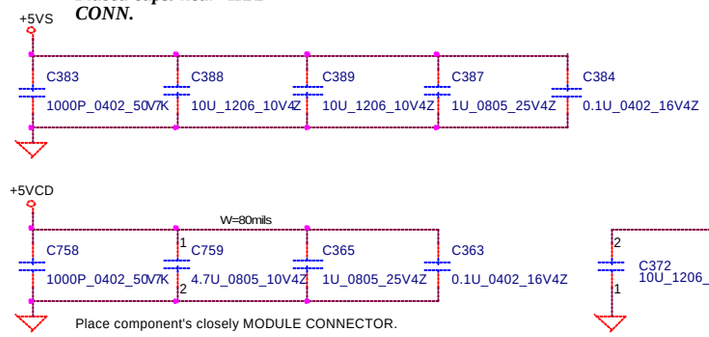

THIS SHEET OF ENGINEERING DRAWING IS THE PROPRIETARY PROPERTY OF COMPAL ELECTRONICS, INC. AND CONTAINS CONFIDENTIAL AND TRADE SECRET INFORMATION. THIS SHEET MAY NOT BE TRANSFERED FROM THE CUSTODY OF THE COMPETENT DIVISION OF R&D DEPARTMENT EXCEPT AS AUTHORIZED BY COMPAL ELECTRONICS, INC. NEITHER THIS SHEET NOR THE INFORMATION IT CONTAINS MAY BE USED BY OR DISCLOSED TO ANY THIRD PARTY WITHOUT PRIOR WRITTEN CONSENT OF COMPAL ELECTRONICS, INC.

Compal Electronics, Inc.

Title	IDE/ FDD MODULE CONN.	
Size B	Document Number LA-1911	Rev 0.2
Date: Friday, August 08, 2003	Sheet 33 of 57	

SUPER I/O SMsC FDC47N227

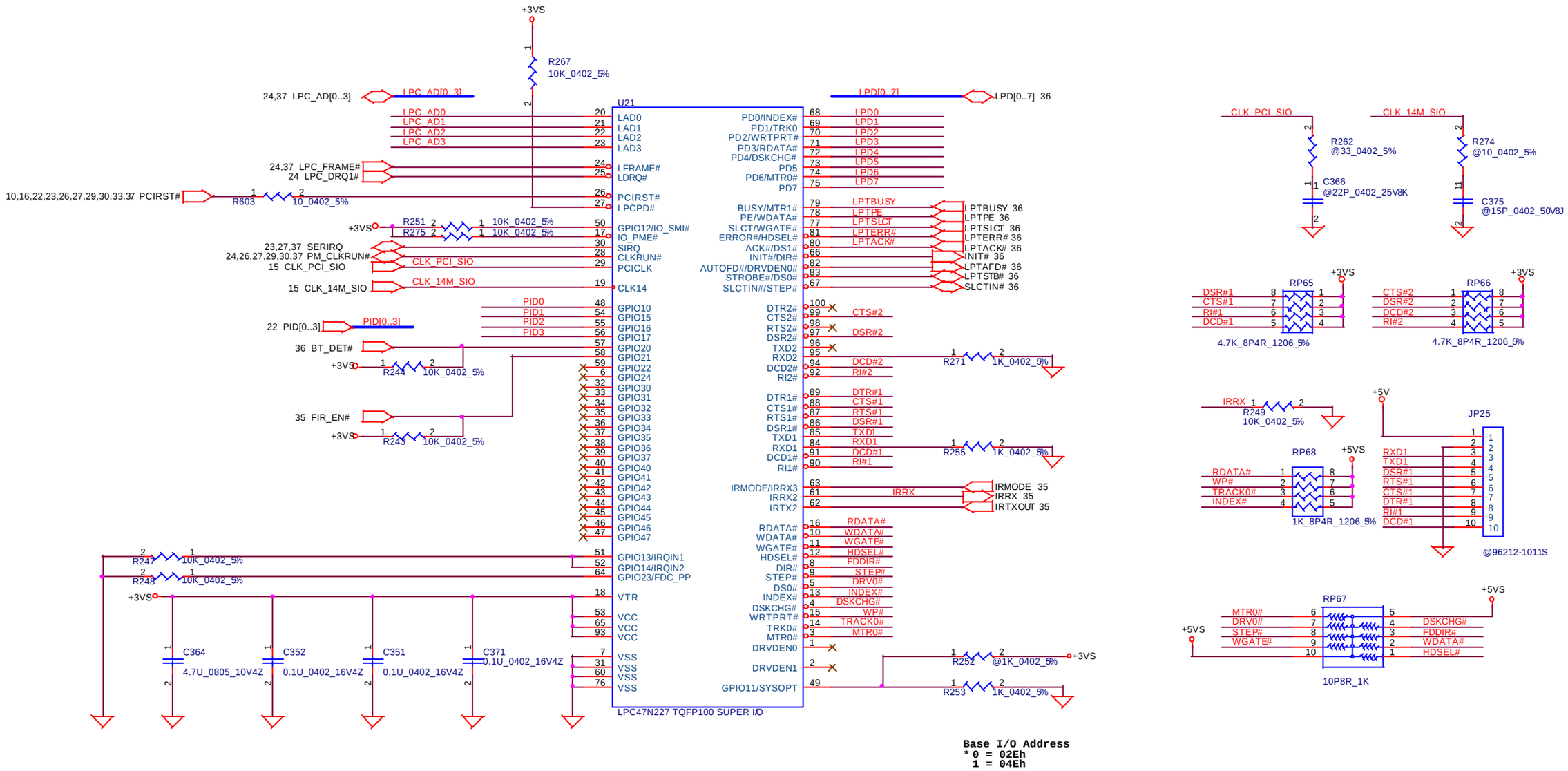

Base I/O Address
*** 0 = 02Eh**
1 = 04Eh

PROPRIETARY NOTE THIS SHEET OF ENGINEERING DRAWING IS THE PROPRIETARY PROPERTY OF COMPAL ELECTRONICS, INC. AND CONTAINS CONFIDENTIAL AND TRADE SECRET INFORMATION. THIS SHEET MAY NOT BE TRANSFERRED FROM THE CUSTODY OF THE COMPETENT DIVISION OF R&D DEPARTMENT EXCEPT AS AUTHORIZED BY COMPAL ELECTRONICS, INC. NEITHER THIS SHEET NOR THE INFORMATION IT CONTAINS MAY BE USED BY OR DISCLOSED TO ANY THIRD PARTY WITHOUT PRIOR WRITTEN CONSENT OF COMPAL ELECTRONICS, INC.

Compal Electronics, Inc.

Title	SUPER IO	
Size B	Document Number LA-1911	Rev 0.2
Date: Friday, August 08, 2003	Sheet 34 of 57	

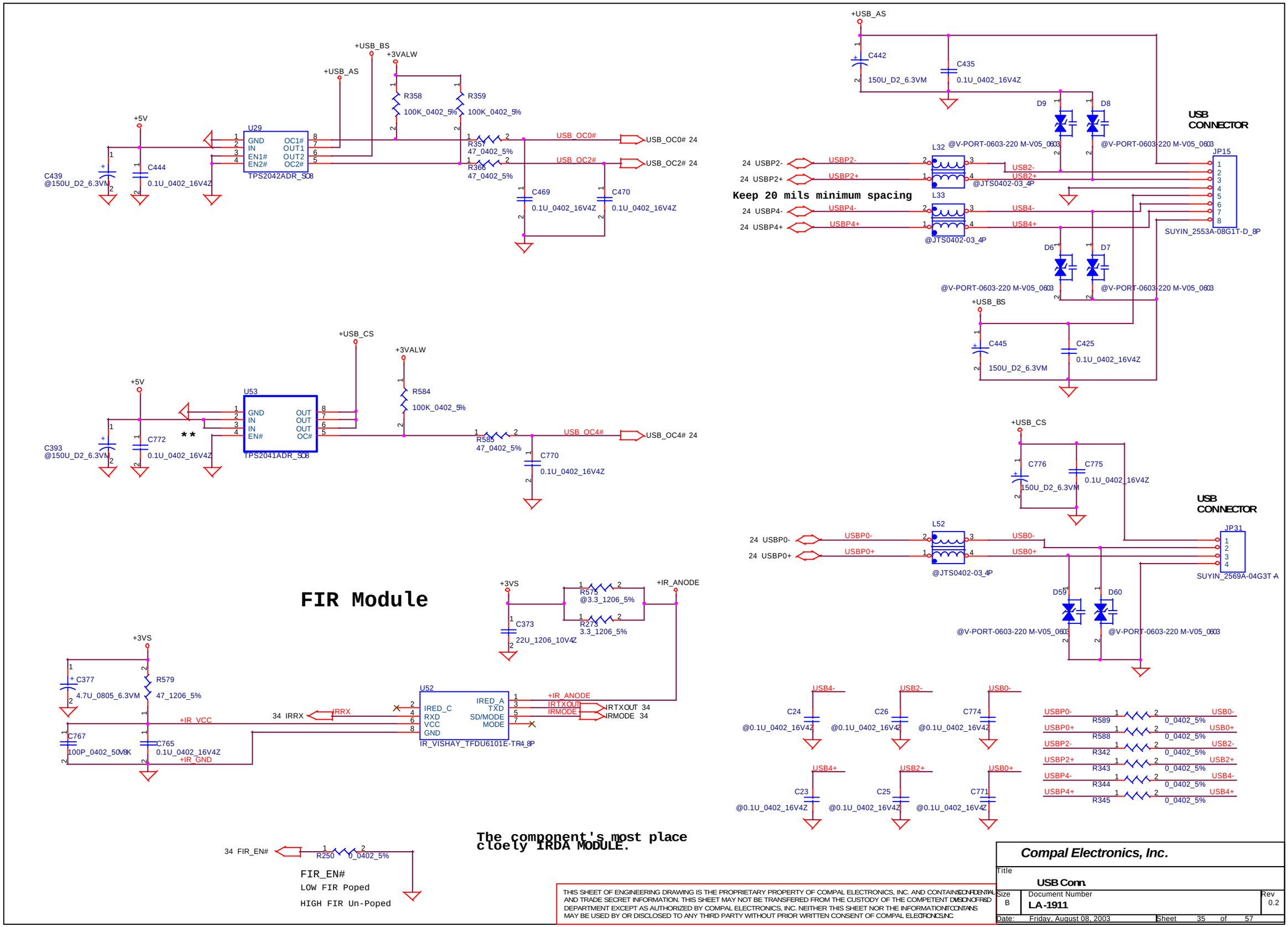

THIS SHEET OF ENGINEERING DRAWING IS THE PROPRIETARY PROPERTY OF COMPAL ELECTRONICS, INC. AND CONTAINS CONFIDENTIAL AND TRADE SECRET INFORMATION. THIS SHEET MAY NOT BE TRANSFERED FROM THE CUSTODY OF THE COMPETENT DIVISION OF R&D DEPARTMENT EXCEPT AS AUTHORIZED BY COMPAL ELECTRONICS, INC. NEITHER THIS SHEET NOR THE INFORMATION IT CONTAINS MAY BE USED BY OR DISCLOSED TO ANY THIRD PARTY WITHOUT PRIOR WRITTEN CONSENT OF COMPAL ELECTRONICS, INC.

Compal Electronics, Inc.

Title	USB Conn.	
Size B	Document Number LA-1911	Rev 0.2
Date: Friday, August 08, 2003	Sheet 35 of 57	

MDC CONN.

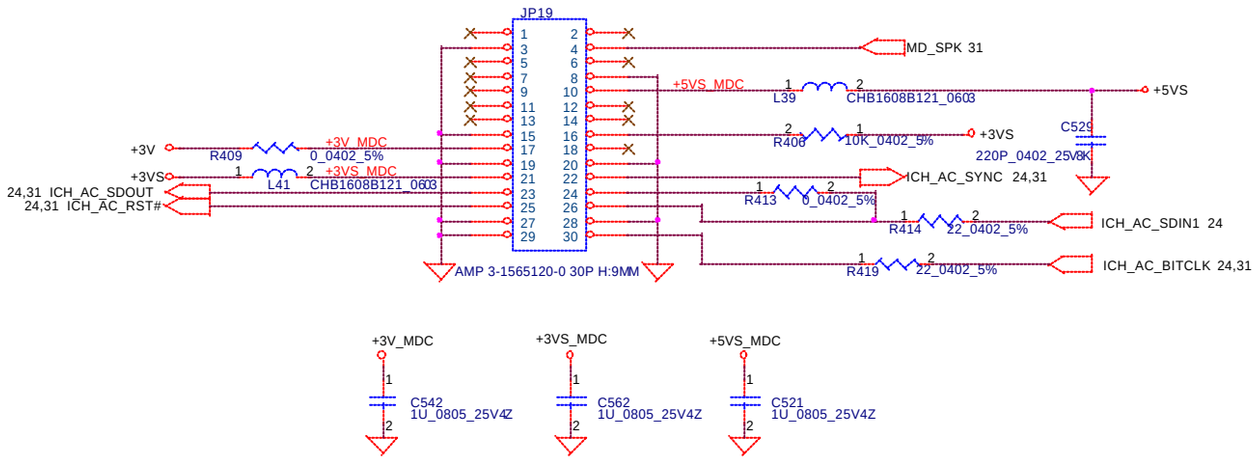

** BlueTooth Interface

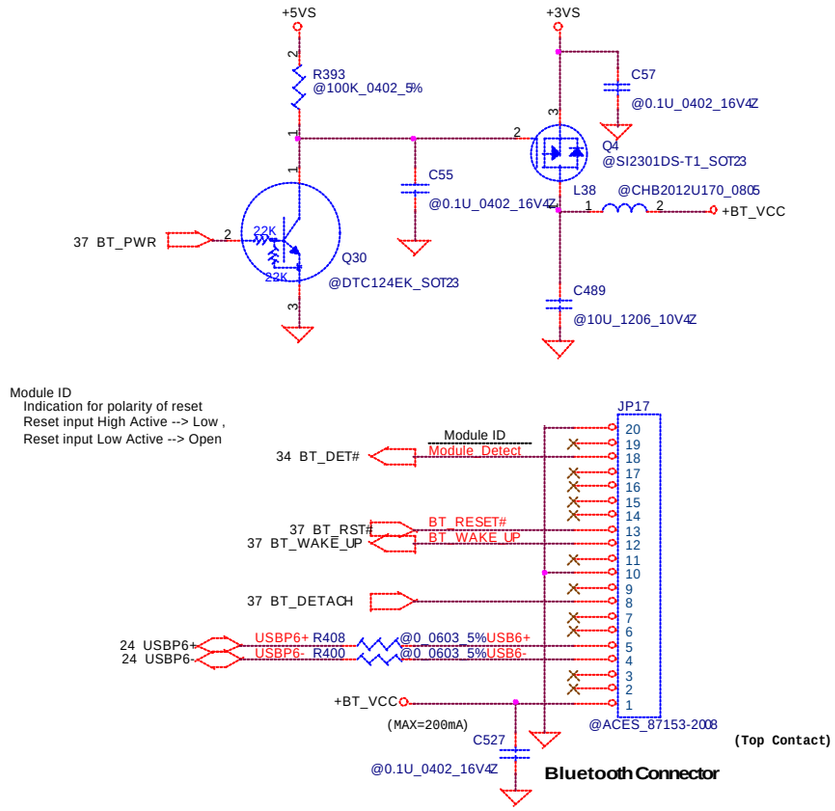

PARALLEL PORT

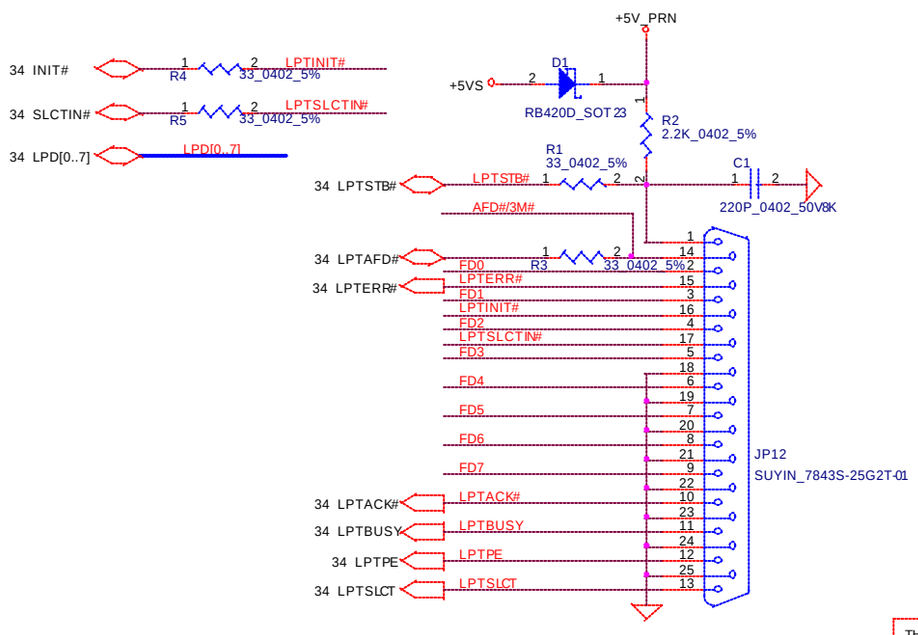

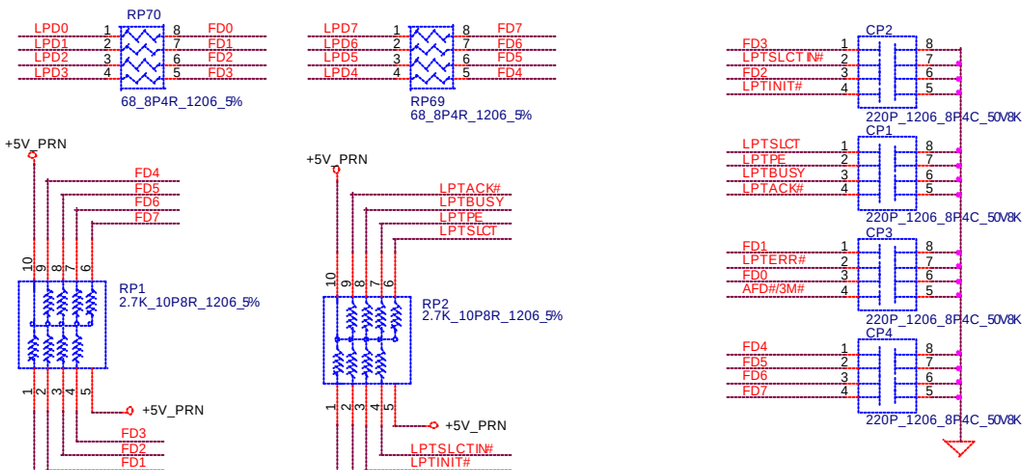

THIS SHEET OF ENGINEERING DRAWING IS THE PROPRIETARY PROPERTY OF COMPAL ELECTRONICS, INC. AND CONTAINS CONFIDENTIAL AND TRADE SECRET INFORMATION. THIS SHEET MAY NOT BE TRANSFERED FROM THE CUSTODY OF THE COMPETENT DIVISION OF R&D DEPARTMENT EXCEPT AS AUTHORIZED BY COMPAL ELECTRONICS, INC. NEITHER THIS SHEET NOR THE INFORMATION IT CONTAINS MAY BE USED BY OR DISCLOSED TO ANY THIRD PARTY WITHOUT PRIOR WRITTEN CONSENT OF COMPAL ELECTRONICS, INC.

Compal Electronics, Inc.

Title	PARALLEL/MDC/PORT	
Size	Document Number: LA-1911	Rev: 0.2
Date: Friday, August 08, 2003	Sheet 36 of 57	

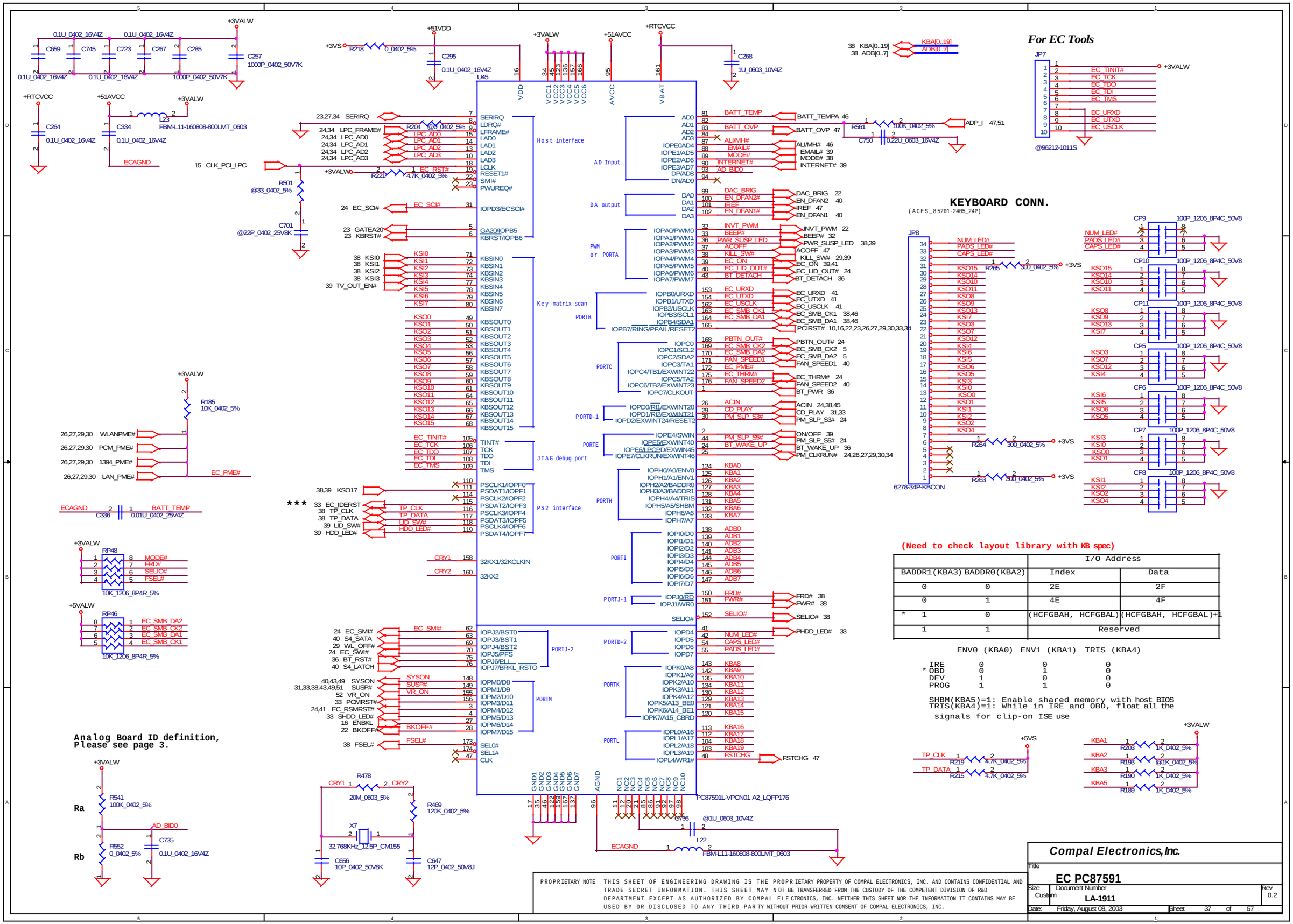

(Need to check layout library with KB spec)

	I/O Address	
BADDR1(KBA3) BADDR0(KBA2)	Index	Data
0 0	2E	2F
0 1	4E	4F
* 1 0	(HCFGBAH, HCFGBAL)	(HCFGBAH, HCFGBAL)+1
1 1	Reserved	

	ENV0 (KBA0)	ENV1 (KBA1)	TRIS (KBA4)
IRE	0	0	0
* OBD	0	1	0
DEV	1	0	0
PROG	1	1	0

SHBM(KBA5)=1: Enable shared memory with host BIOS
TRIS(KBA4)=1: While in IRE and OBD, float all the signals for clip-on ISE use

PROPRIETARY NOTE THIS SHEET OF ENGINEERING DRAWING IS THE PROPRIETARY PROPERTY OF COMPAL ELECTRONICS, INC. AND CONTAINS CONFIDENTIAL AND TRADE SECRET INFORMATION. THIS SHEET MAY NOT BE TRANSFERRED FROM THE CUSTODY OF THE COMPETENT DIVISION OF R&D DEPARTMENT EXCEPT AS AUTHORIZED BY COMPAL ELECTRONICS, INC. NEITHER THIS SHEET NOR THE INFORMATION IT CONTAINS MAY BE USED BY OR DISCLOSED TO ANY THIRD PARTY WITHOUT PRIOR WRITTEN CONSENT OF COMPAL ELECTRONICS, INC.

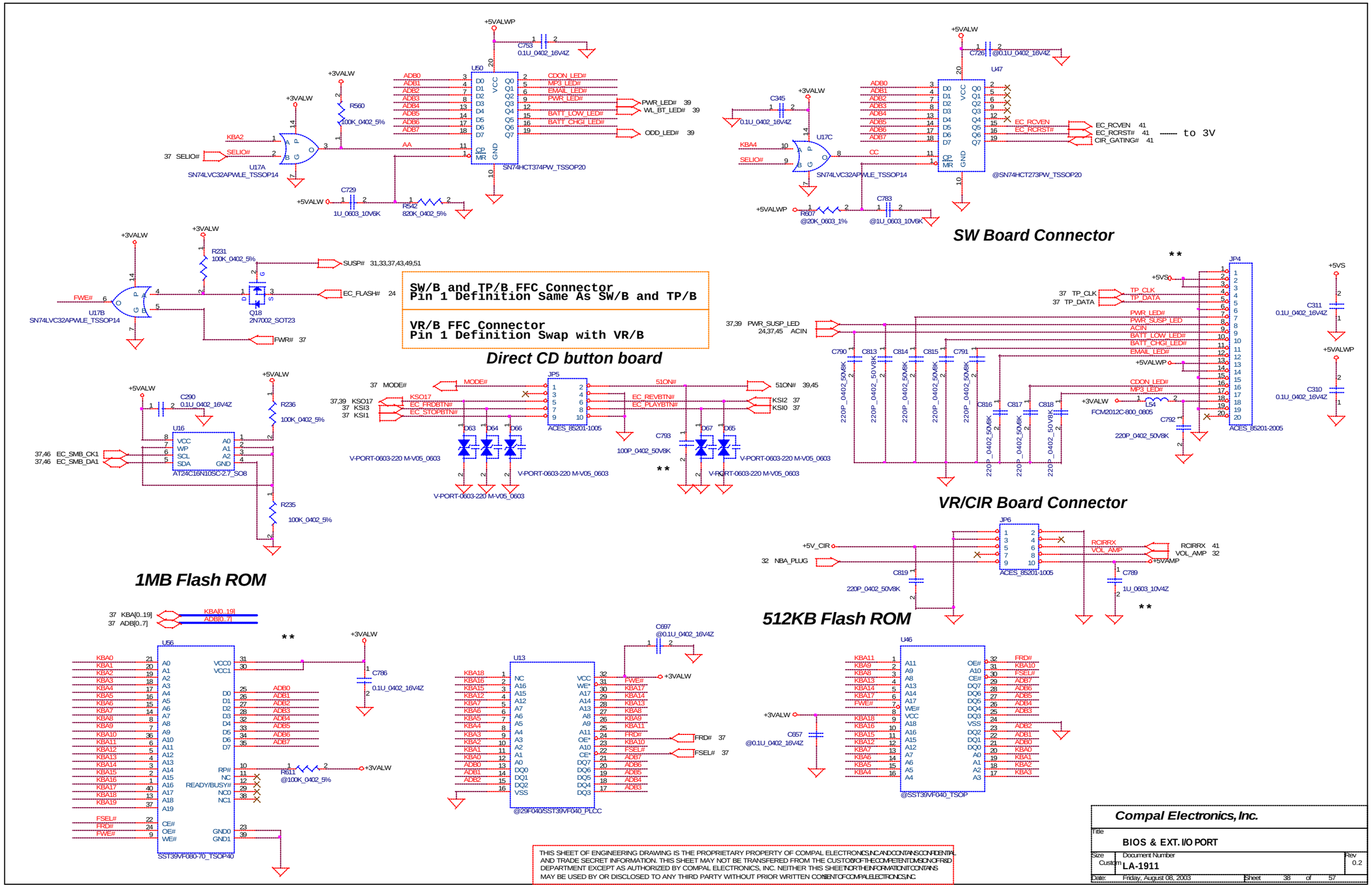
SW Board Connector
Direct CD button board
SW/B and TP/B FFC Connector
Pin 1 Definition Same As SW/B and TP/B
VR/B FFC Connector
Pin 1 Definition Swap with VR/B
VR/CIR Board Connector
1MB Flash ROM
512KB Flash ROM
U50
SN74HCT374PW_TSSOP20
U47
@SN74HCT273PW_TSSOP20
U17A
SN74LVC32APWLE_TSSOP14
U17C
U17B
Q18
2N7002_SOT23
JP5
ACES_85201-1005
JP4
ACES_85201-2005
JP6
U16
AT24C16N10SC-2.7_SO8
U56
SST39VF080-70_TSOP40
U13
@29F040/SST39VF040_PLCC
U46
@SST39VF040_TSOP
to 3V
THIS SHEET OF ENGINEERING DRAWING IS THE PROPRIETARY PROPERTY OF COMPAL ELECTRONICS, INC. AND CONTAINS CONFIDENTIAL AND TRADE SECRET INFORMATION. THIS SHEET MAY NOT BE TRANSFERED FROM THE CUSTODY OF THE COMPETENT DIVISION OF R&D DEPARTMENT EXCEPT AS AUTHORIZED BY COMPAL ELECTRONICS, INC. NEITHER THIS SHEET NOR THE INFORMATION IT CONTAINS MAY BE USED BY OR DISCLOSED TO ANY THIRD PARTY WITHOUT PRIOR WRITTEN CONSENT OF COMPAL ELECTRONICS, INC.
Compal Electronics, Inc.
Title
BIOS & EXT. I/O PORT
Size
Custom
Document Number
LA-1911
Rev
0.2
Date: Friday, August 08, 2003
Sheet 38 of 57

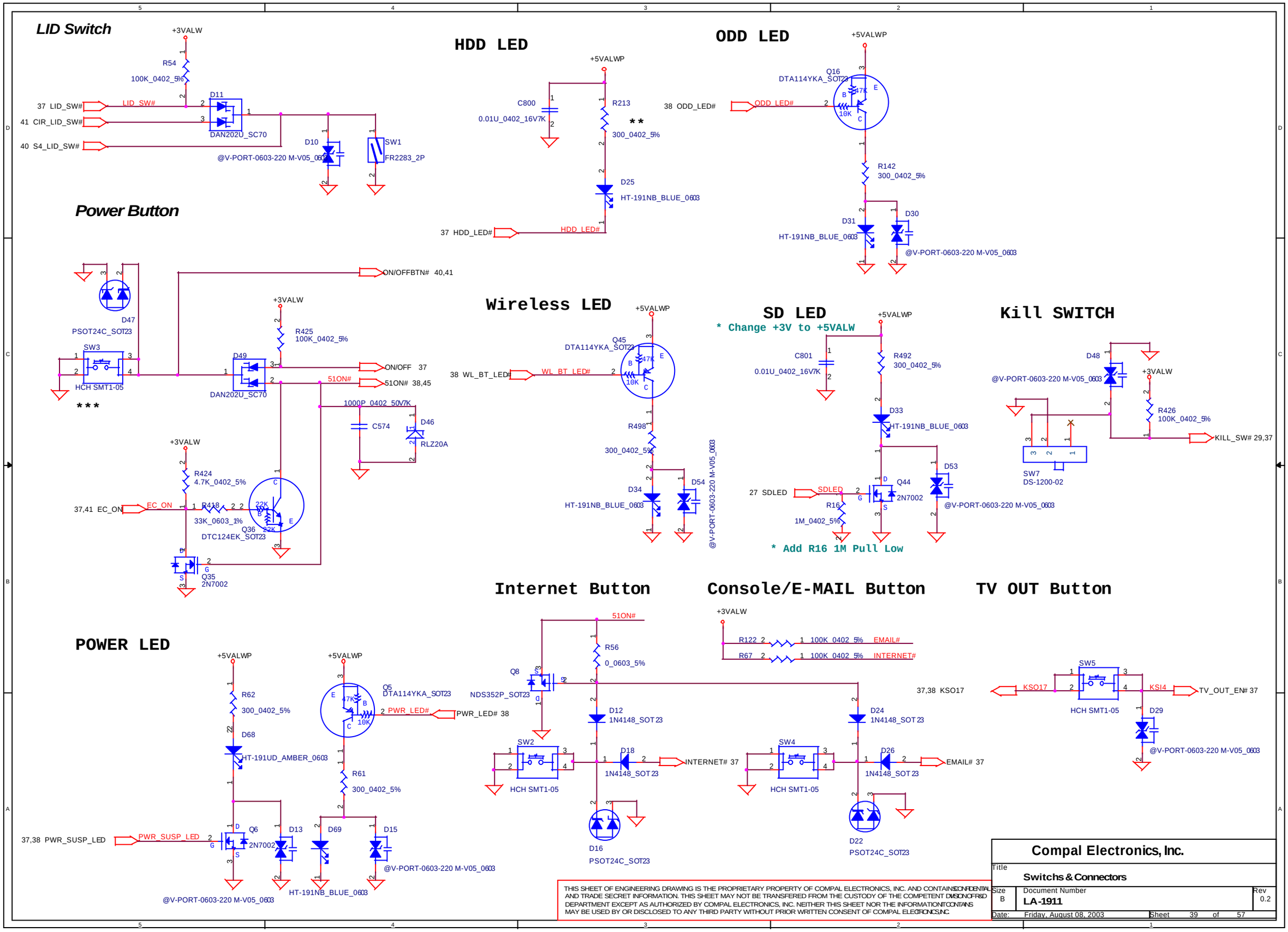

THIS SHEET OF ENGINEERING DRAWING IS THE PROPRIETARY PROPERTY OF COMPAL ELECTRONICS, INC. AND CONTAINS CONFIDENTIAL AND TRADE SECRET INFORMATION. THIS SHEET MAY NOT BE TRANSFERED FROM THE CUSTODY OF THE COMPETENT DIVISION OF R&D DEPARTMENT EXCEPT AS AUTHORIZED BY COMPAL ELECTRONICS, INC. NEITHER THIS SHEET NOR THE INFORMATION IT CONTAINS MAY BE USED BY OR DISCLOSED TO ANY THIRD PARTY WITHOUT PRIOR WRITTEN CONSENT OF COMPAL ELECTRONICS, INC.

Compal Electronics, Inc.			
Title: Switchs & Connectors			
Size: B	Document Number: LA-1911		Rev: 0.2
Date: Friday, August 08, 2003	Sheet 39 of 57		

FAN CONN. 1

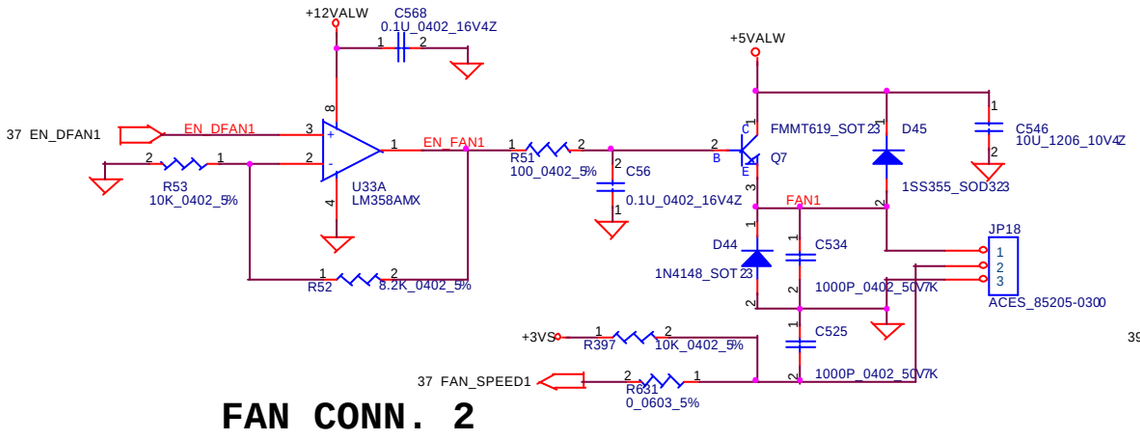

FAN CONN. 2

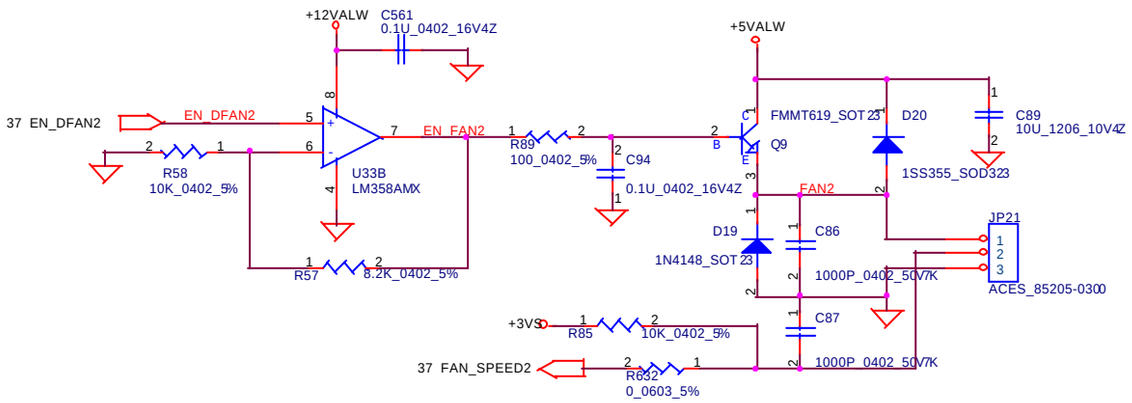

Battery mode Hibernation

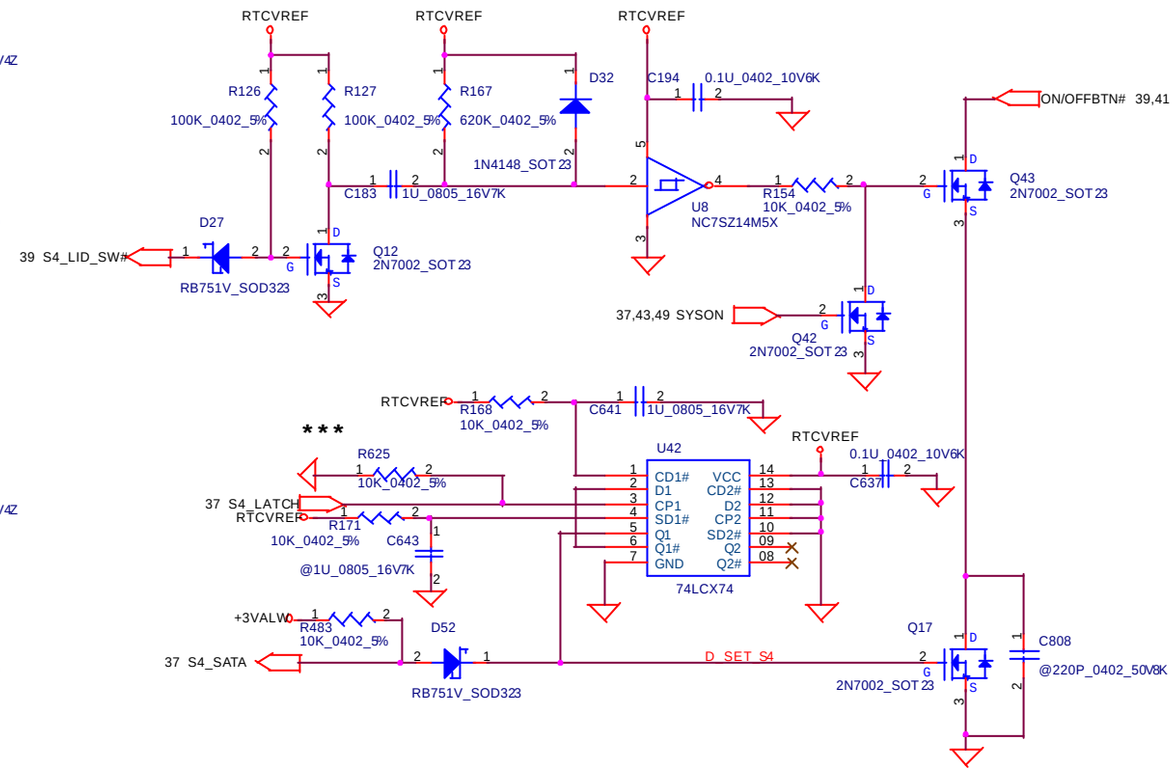

RTC Battery

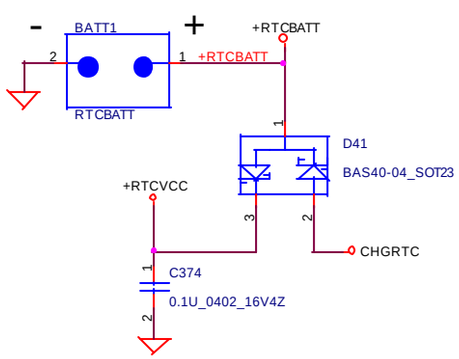

Power ON Circuit

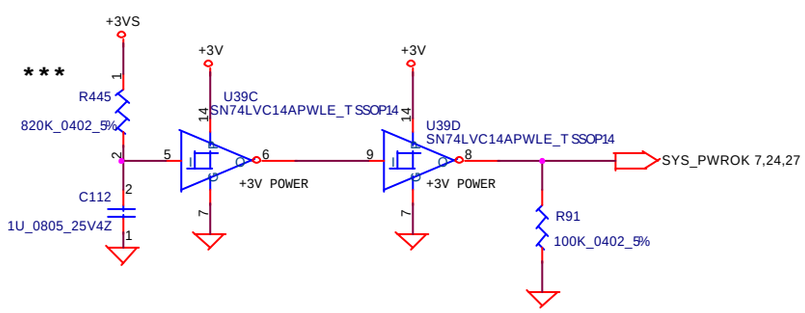

CK409 Power Good Circuit

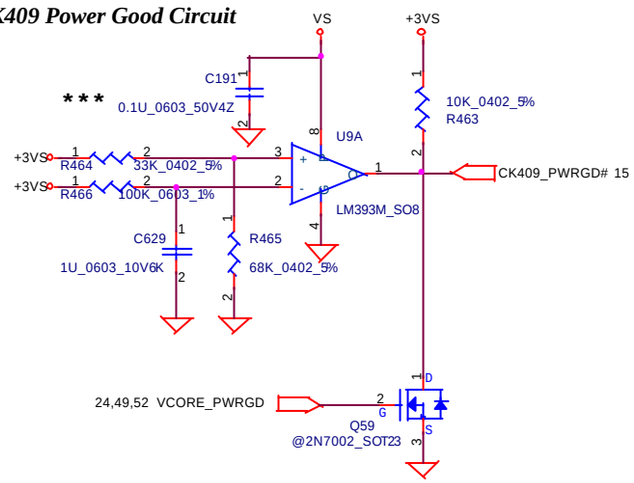

Compal Electronics, Inc.		
Title: Power OK/Reset/RTC battery/Lid Switch/Int.KB		
Size	Document Number: LA-1911	Rev: 0.2
Date: Friday, August 08, 2003	Sheet 40 of 57	

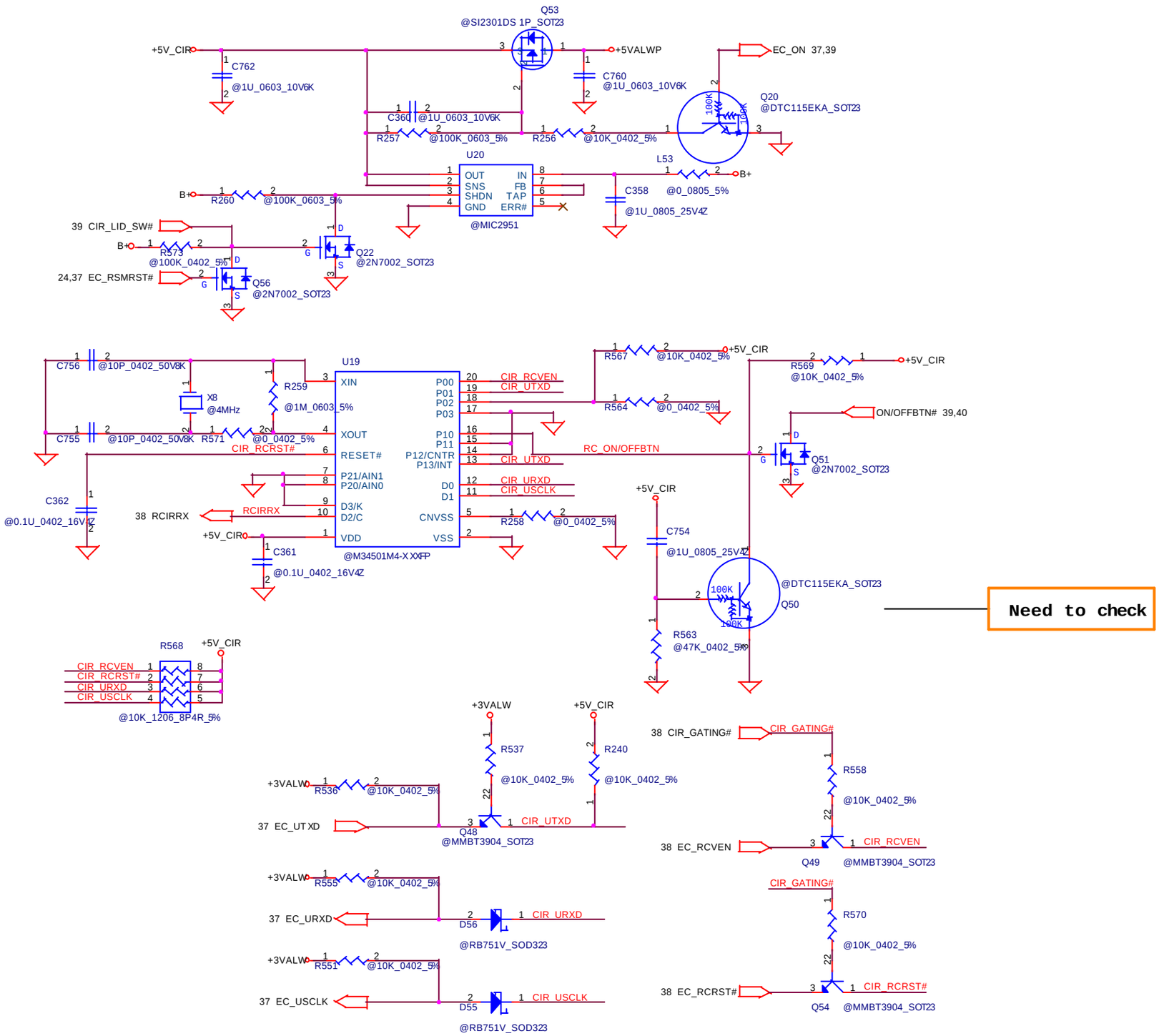

Need to check

THIS SHEET OF ENGINEERING DRAWING IS THE PROPRIETARY PROPERTY OF COMPAL ELECTRONICS, INC. AND CONTAINS CONFIDENTIAL AND TRADE SECRET INFORMATION. THIS SHEET MAY NOT BE TRANSFERED FROM THE CUSTODY OF THE COMPETENT DIVISION OF R&D DEPARTMENT EXCEPT AS AUTHORIZED BY COMPAL ELECTRONICS, INC. NEITHER THIS SHEET NOR THE INFORMATION IT CONTAINS MAY BE USED BY OR DISCLOSED TO ANY THIRD PARTY WITHOUT PRIOR WRITTEN CONSENT OF COMPAL ELECTRONICS, INC.

Compal Electronics, Inc.

Title	CIR & Screws	
Size B	Document Number LA-1911	Rev 0.2
Date: Friday, August 08, 2003	Sheet 41 of 57	

OZ168 DIRECT CD CONTROLLER

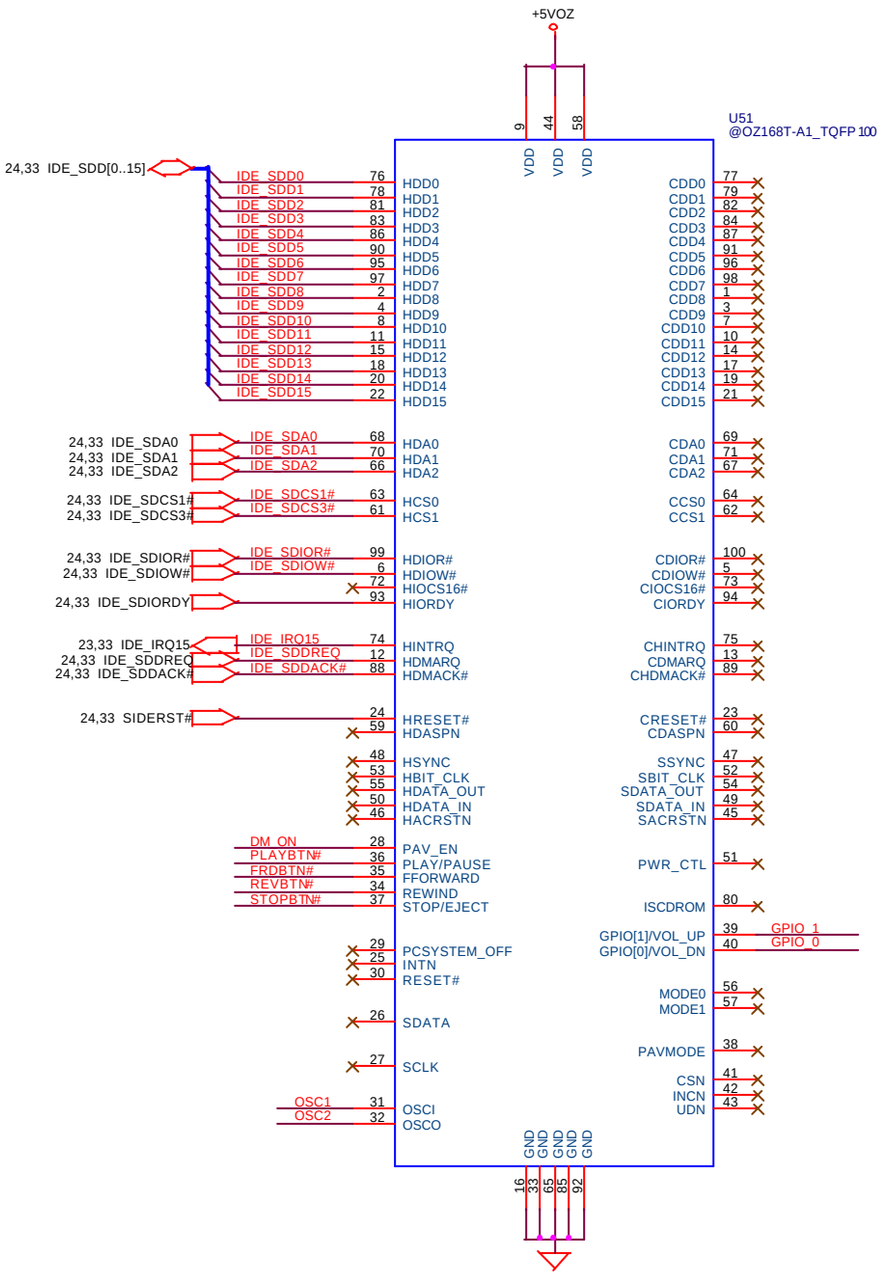

+5VOZ TO +5VCD

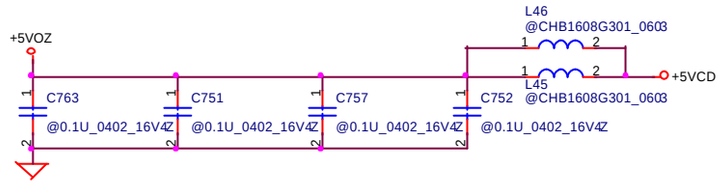

OZ168 8MHz CRYSTAL

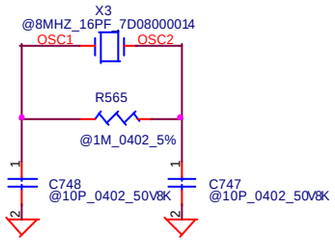

OZ168 UNUSED PIN PULL UP

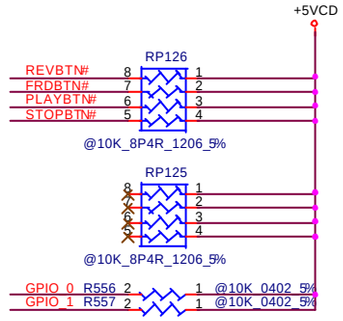

PROGRAMMING CLOCK GENERATOR

THIS SHEET OF ENGINEERING DRAWING IS THE PROPRIETARY PROPERTY OF COMPAL ELECTRONICS, INC. AND CONTAINS CONFIDENTIAL AND TRADE SECRET INFORMATION. THIS SHEET MAY NOT BE TRANSFERED FROM THE CUSTODY OF THE COMPETENT DIVISION OF R&D DEPARTMENT EXCEPT AS AUTHORIZED BY COMPAL ELECTRONICS, INC. NEITHER THIS SHEET NOR THE INFORMATION IT CONTAINS MAY BE USED BY OR DISCLOSED TO ANY THIRD PARTY WITHOUT PRIOR WRITTEN CONSENT OF COMPAL ELECTRONICS, INC.

Compal Electronics, Inc.

Title	OZ-168 CD_PLAY & Programming Clock	
Size B	Document Number LA-1911	Rev 0.2
Date: Friday, August 08, 2003	Sheet 42 of 57	

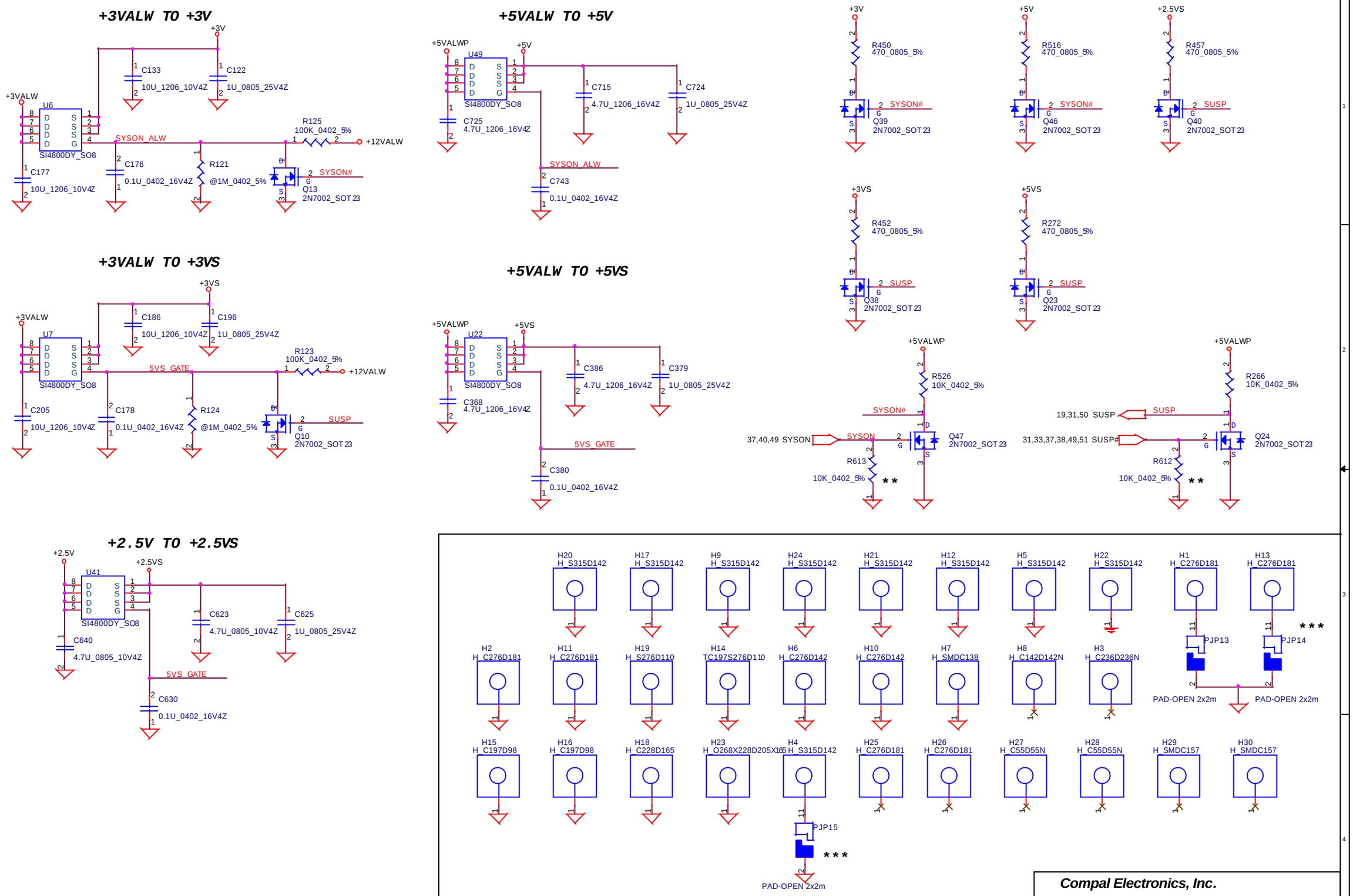

PROPRIETARY NOTE: THIS SHEET OF ENGINEERING DRAWING IS THE PROPRIETARY PROPERTY OF COMPAL ELECTRONICS, INC. AND CONTAINS CONFIDENTIAL AND TRADE SECRET INFORMATION. THIS SHEET MAY NOT BE TRANSFERRED FROM THE CUSTODY OF THE COMPETENT DIVISION OF R&D DEPARTMENT EXCEPT AS AUTHORIZED BY COMPAL ELECTRONICS, INC. NEITHER THIS SHEET NOR THE INFORMATION IT CONTAINS MAY BE USED BY OR DISCLOSED TO ANY THIRD PARTY WITHOUT PRIOR WRITTEN CONSENT OF COMPAL ELECTRONICS, INC.

Compal Electronics, Inc.

Title	POWER CONTROLCKT
Size B	Document Number LA-1911
Rev	0.2
Date: Friday, August 08, 2003	Sheet 43 of 57

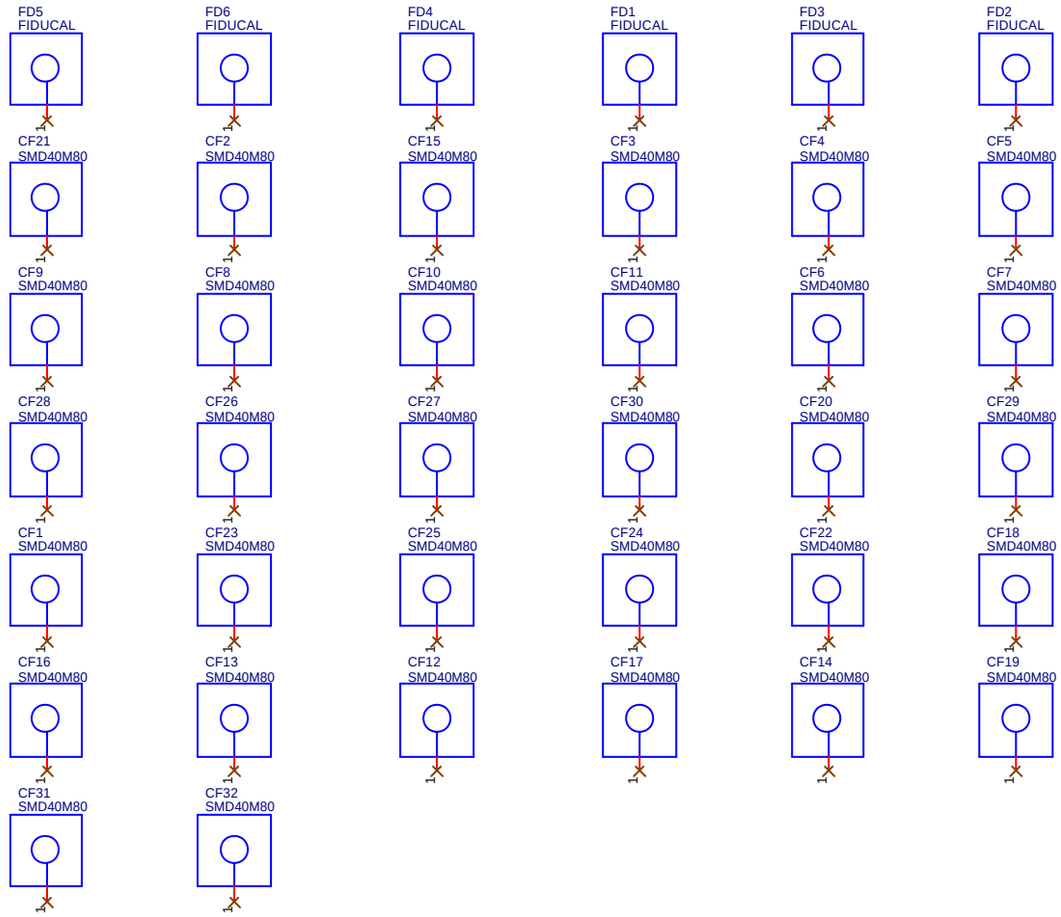

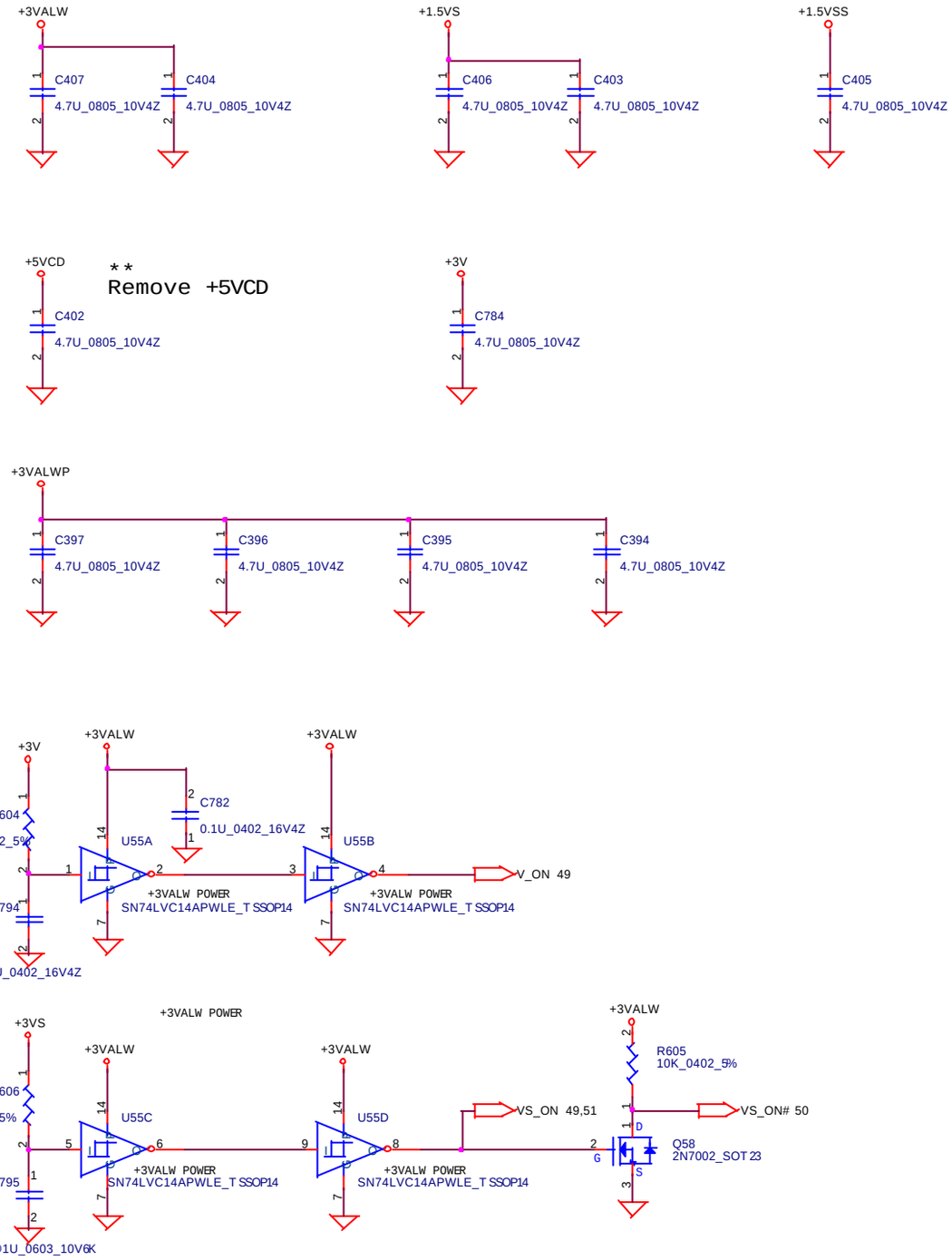

PROPRIETARY NOTE THIS SHEET OF ENGINEERING DRAWING IS THE PROPRIETARY PROPERTY OF COMPAL ELECTRONICS, INC. AND CONTAINS CONFIDENTIAL AND TRADE SECRET INFORMATION. THIS SHEET MAY NOT BE TRANSFERRED FROM THE CUSTODY OF THE COMPETENT DIVISION OF R&D DEPARTMENT EXCEPT AS AUTHORIZED BY COMPAL ELECTRONICS, INC. NEITHER THIS SHEET NOR THE INFORMATION IT CONTAINS MAY BE USED BY OR DISCLOSED TO ANY THIRD PARTY WITHOUT PRIOR WRITTEN CONSENT OF COMPAL ELECTRONICS, INC.

Compal Electronics, Inc.

Title	Point and Capacitance	
Size B	Document Number LA-1911	Rev 0.2
Date: Friday, August 08, 2003	Sheet 44 of 57	

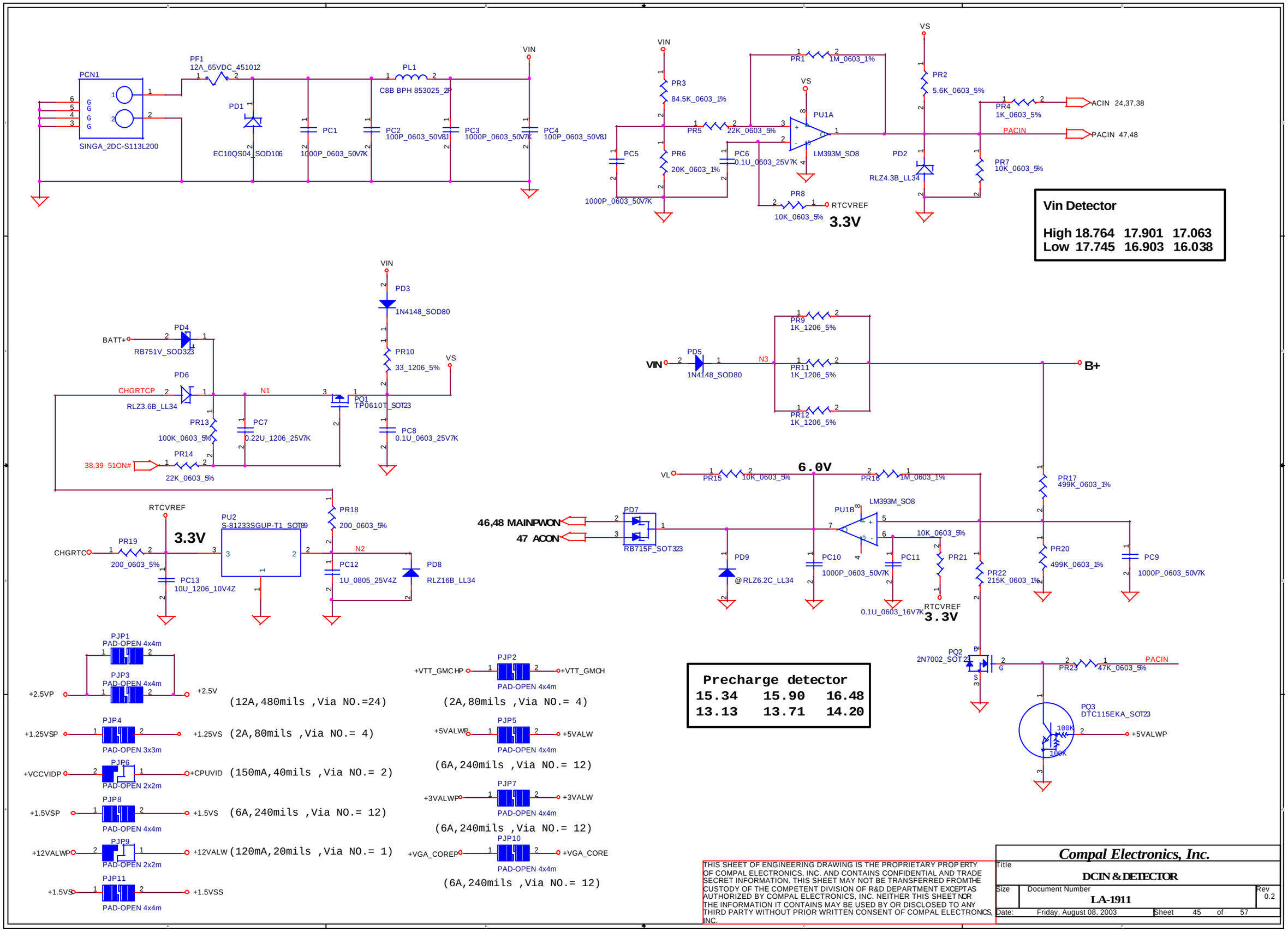

THIS SHEET OF ENGINEERING DRAWING IS THE PROPRIETARY PROPERTY OF COMPAL ELECTRONICS, INC. AND CONTAINS CONFIDENTIAL AND TRADE SECRET INFORMATION. THIS SHEET MAY NOT BE TRANSFERRED FROM THE CUSTODY OF THE COMPETENT DIVISION OF R&D DEPARTMENT EXCEPT AS AUTHORIZED BY COMPAL ELECTRONICS, INC. NEITHER THIS SHEET NOR THE INFORMATION IT CONTAINS MAY BE USED BY OR DISCLOSED TO ANY THIRD PARTY WITHOUT PRIOR WRITTEN CONSENT OF COMPAL ELECTRONICS, INC.

Compal Electronics, Inc.

Title	DCIN & DETECTOR	
Size	Document Number: LA-1911	Rev 0.2
Date: Friday, August 08, 2003	Sheet 45 of 57	

PH1 under CPU botten side :
CPU thermal protection at 84 degree C
Recovery at 44 degree C

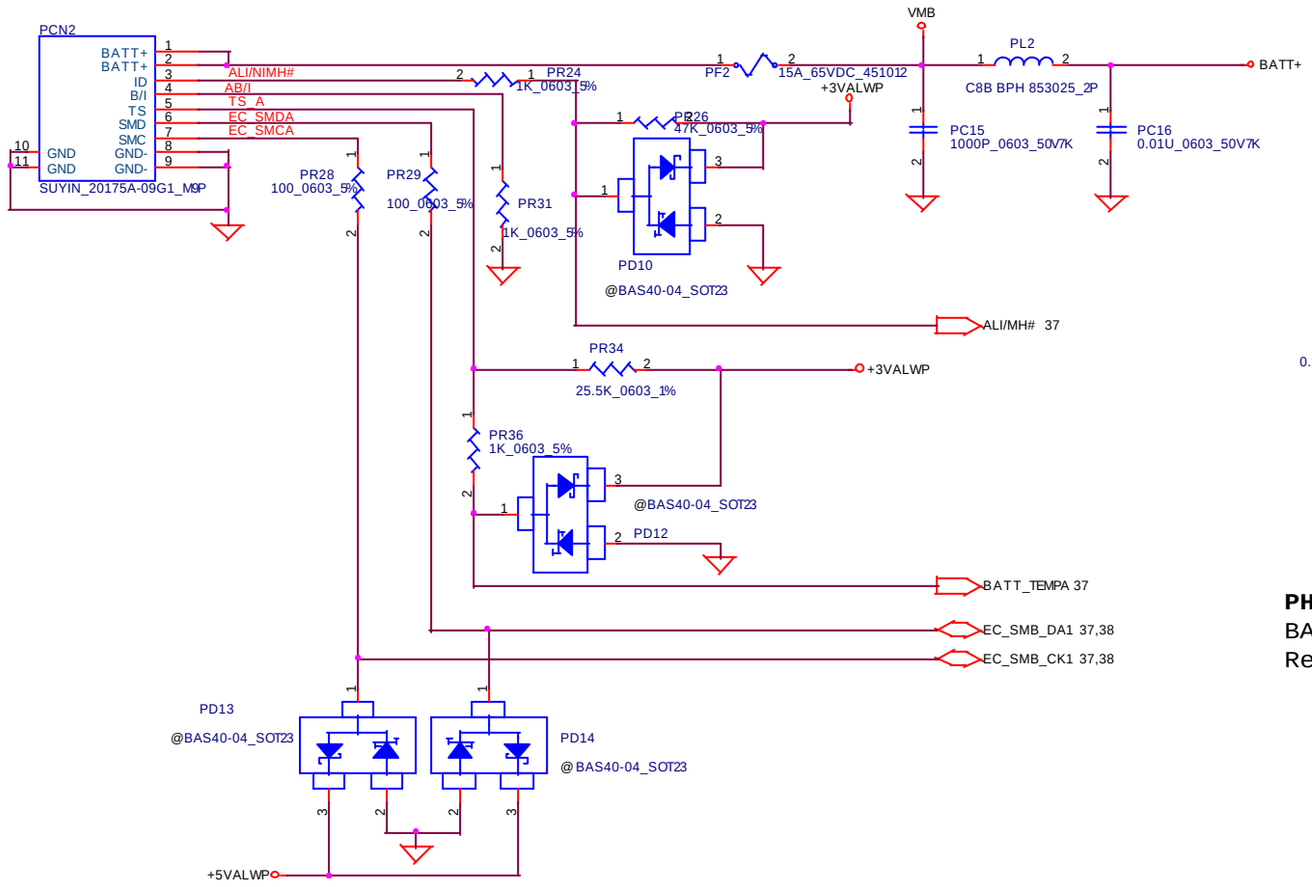

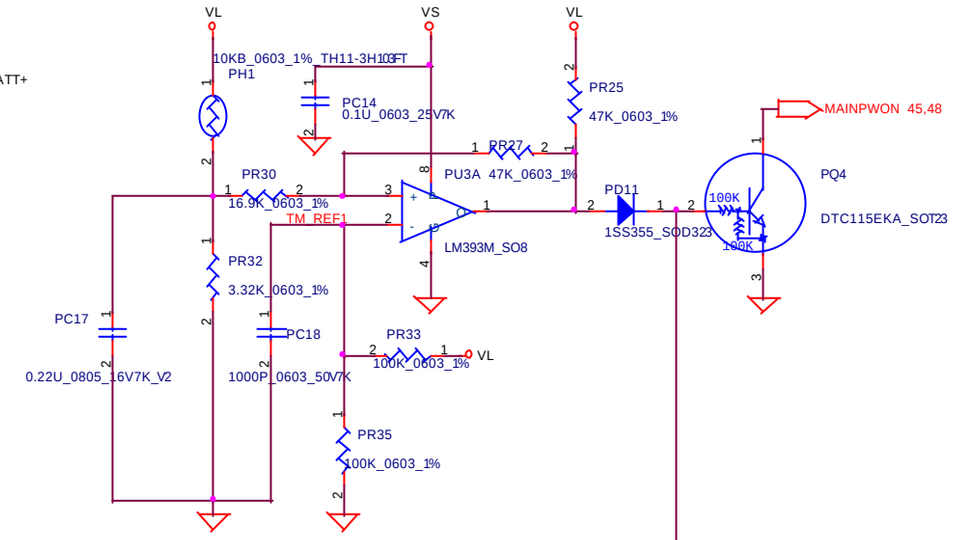

PH2 near main Battery CONN :
BAT. thermal protection at 78 degree C
Recovery at 44 degree C

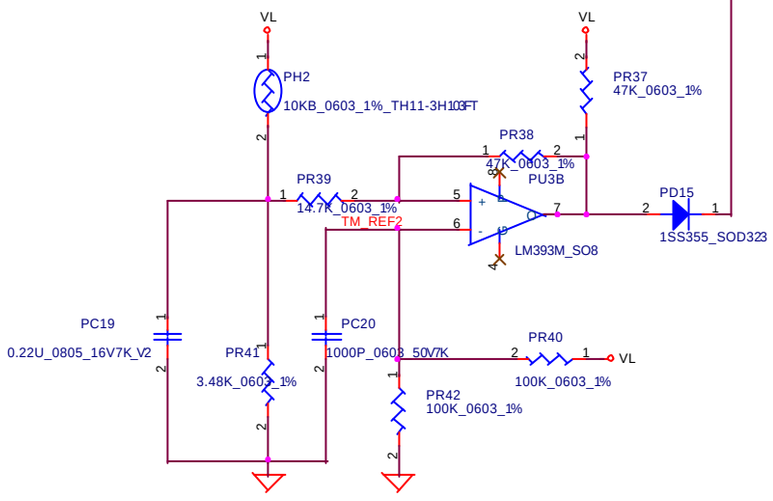

THIS SHEET OF ENGINEERING DRAWING IS THE PROPRIETARY PROPERTY OF COMPAL ELECTRONICS, INC. AND CONTAINS CONFIDENTIAL AND TRADE SECRET INFORMATION. THIS SHEET MAY NOT BE TRANSFERRED FROM THE CUSTODY OF THE COMPETENT DIVISION OF R&D DEPARTMENT EXCEPT AS AUTHORIZED BY COMPAL ELECTRONICS, INC. NEITHER THIS SHEET NOR THE INFORMATION IT CONTAINS MAY BE USED BY OR DISCLOSED TO ANY THIRD PARTY WITHOUT PRIOR WRITTEN CONSENT OF COMPAL ELECTRONICS, INC.

Compal Electronics, Inc.		
Title: BATTERY CONN/OTP		
Size	Document Number: LA-1911	Rev: 0.2
Date: Friday, August 08, 2003	Sheet 46 of 57	

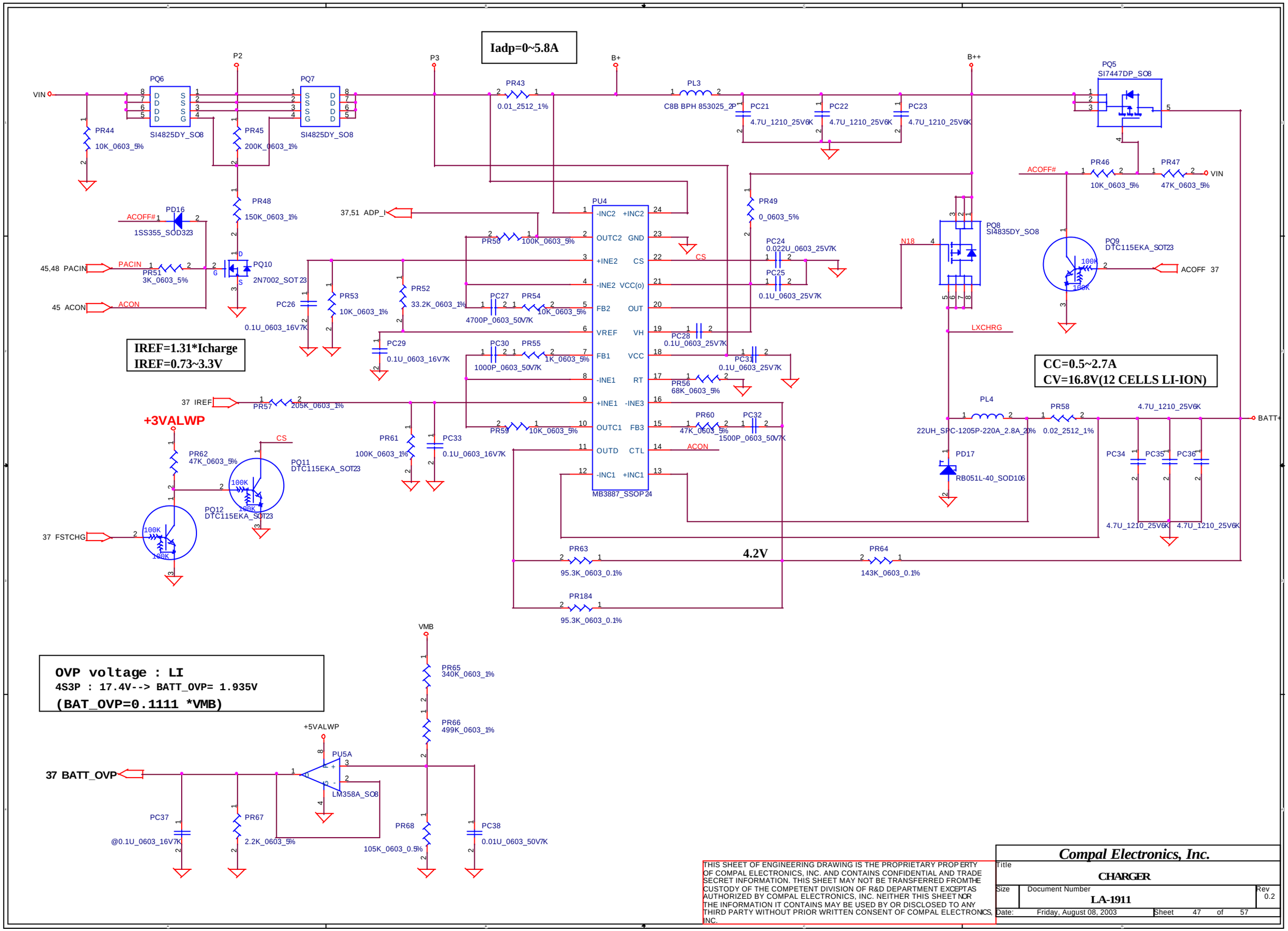

THIS SHEET OF ENGINEERING DRAWING IS THE PROPRIETARY PROPERTY OF COMPAL ELECTRONICS, INC. AND CONTAINS CONFIDENTIAL AND TRADE SECRET INFORMATION. THIS SHEET MAY NOT BE TRANSFERRED FROM THE CUSTODY OF THE COMPETENT DIVISION OF R&D DEPARTMENT EXCEPT AS AUTHORIZED BY COMPAL ELECTRONICS, INC. NEITHER THIS SHEET NOR THE INFORMATION IT CONTAINS MAY BE USED BY OR DISCLOSED TO ANY THIRD PARTY WITHOUT PRIOR WRITTEN CONSENT OF COMPAL ELECTRONICS, INC.

Compal Electronics, Inc.			
Title: CHARGER			
Size	Document Number: LA-1911		Rev 0.2
Date: Friday, August 08, 2003	Sheet 47 of 57		

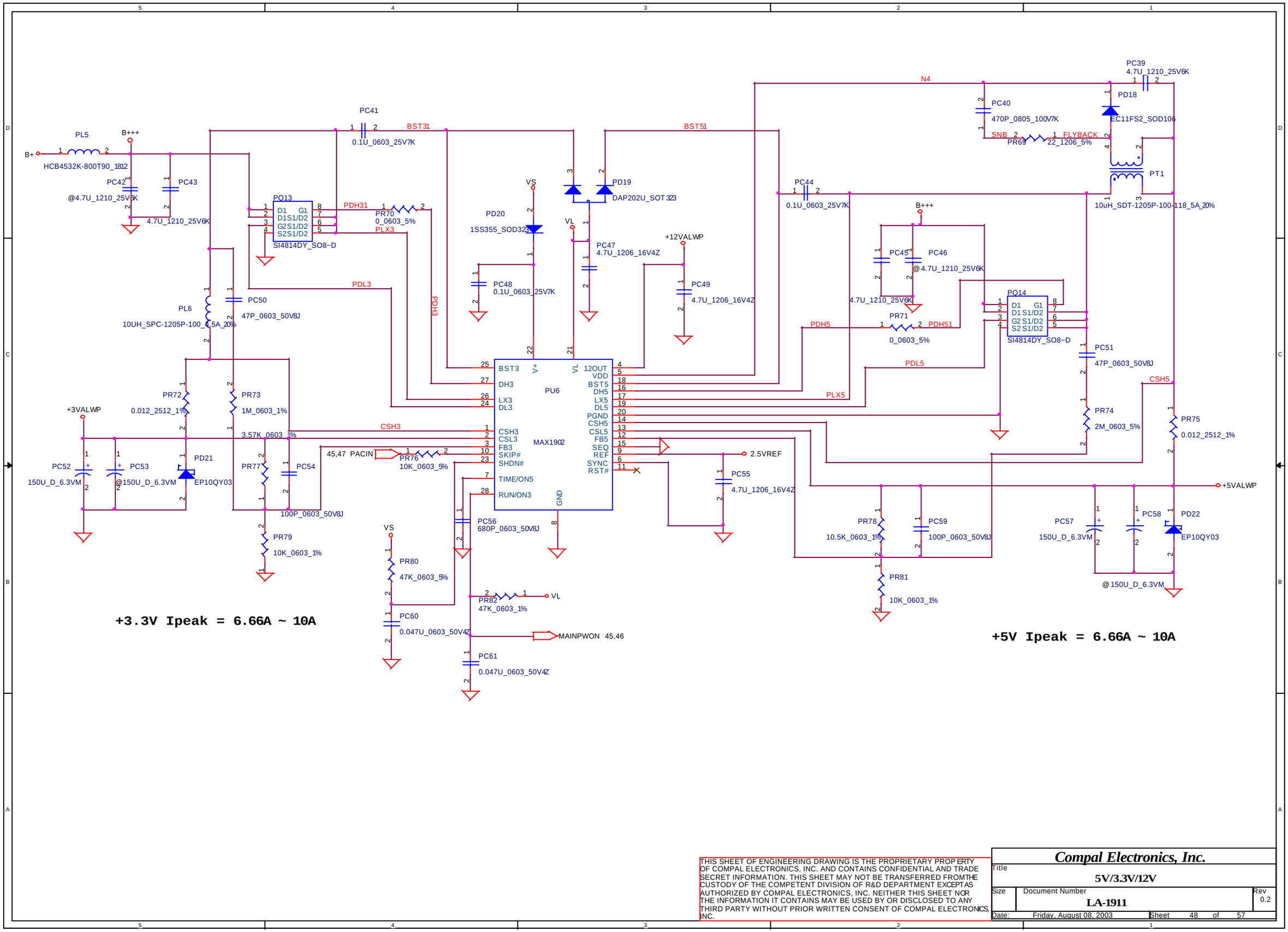

THIS SHEET OF ENGINEERING DRAWING IS THE PROPRIETARY PROPERTY OF COMPAL ELECTRONICS, INC. AND CONTAINS CONFIDENTIAL AND TRADE SECRET INFORMATION. THIS SHEET MAY NOT BE TRANSFERRED FROM THE CUSTODY OF THE COMPETENT DIVISION OF R&D DEPARTMENT EXCEPT AS AUTHORIZED BY COMPAL ELECTRONICS, INC. NEITHER THIS SHEET NOR THE INFORMATION IT CONTAINS MAY BE USED BY OR DISCLOSED TO ANY THIRD PARTY WITHOUT PRIOR WRITTEN CONSENT OF COMPAL ELECTRONICS, INC.

Compal Electronics, Inc.

Title	5V/3.3V/12V	
Size	Document Number: LA-1911	Rev 0.2
Date: Friday, August 08, 2003	Sheet 48 of 57	

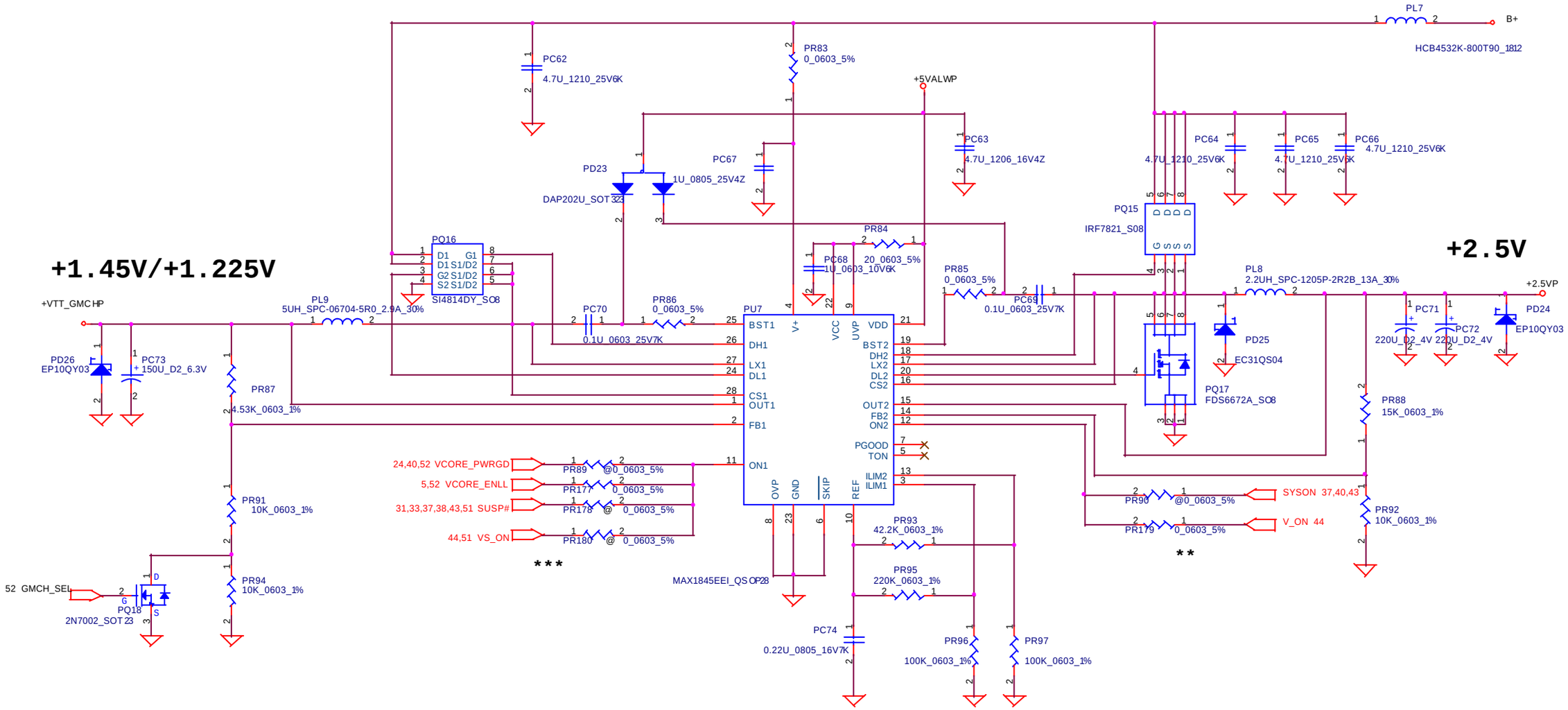

GMCH_SEL=0 PRESCOTT	VTT_GMCH=1.225V
GMCH_SEL=1 NORTHWOOD	VTT_GMCH=1.45V

THIS SHEET OF ENGINEERING DRAWING IS THE PROPRIETARY PROPERTY OF COMPAL ELECTRONICS, INC. AND CONTAINS CONFIDENTIAL AND TRADE SECRET INFORMATION. THIS SHEET MAY NOT BE TRANSFERRED FROM THE CUSTODY OF THE COMPETENT DIVISION OF R&D DEPARTMENT EXCEPT AS AUTHORIZED BY COMPAL ELECTRONICS, INC. NEITHER THIS SHEET NOR THE INFORMATION IT CONTAINS MAY BE USED BY OR DISCLOSED TO ANY THIRD PARTY WITHOUT PRIOR WRITTEN CONSENT OF COMPAL ELECTRONICS, INC.

Compal Electronics, Inc.

Title: DDR_2.5V/VTT_GMCH

Size | Document Number: LA-1911 | Rev: 0.2

Date: Friday, August 08, 2003 | Sheet 49 of 57

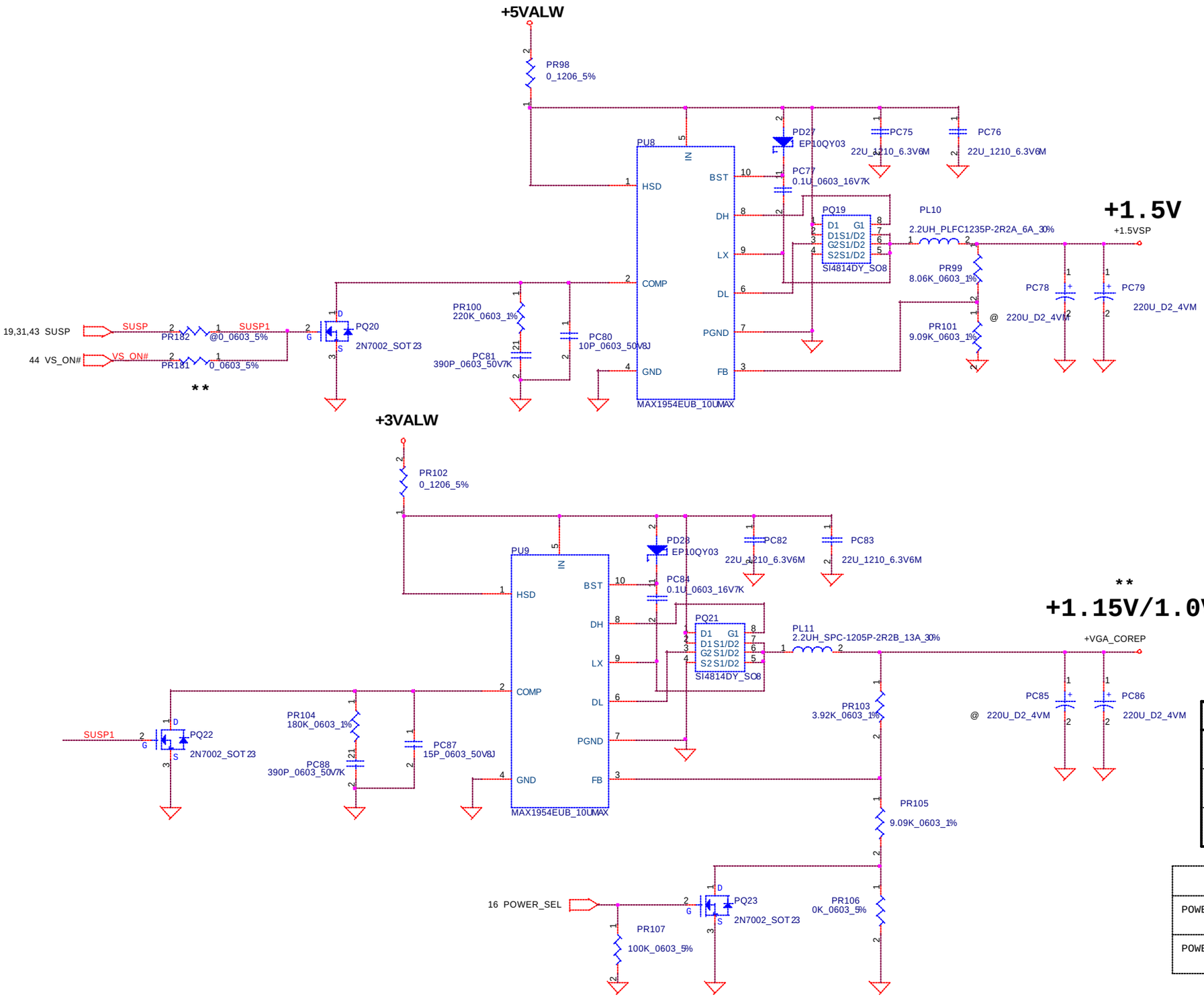

**

+1.15V/1.0V

	PR103	PR106
NV31M	4.53K	9.09K
NV33M	3.92K	0K
NV34M	3.92K	0K

	NV31M	NV33M/NV34M
POWER_SEL=1	VOUT=1.2V	VOUT=1.15V
POWER_SEL=0	VOUT=1.0V	VOUT=1.15V

THIS SHEET OF ENGINEERING DRAWING IS THE PROPRIETARY PROPERTY OF COMPAL ELECTRONICS, INC. AND CONTAINS CONFIDENTIAL AND TRADE SECRET INFORMATION. THIS SHEET MAY NOT BE TRANSFERRED FROM THE CUSTODY OF THE COMPETENT DIVISION OF R&D DEPARTMENT EXCEPT AS AUTHORIZED BY COMPAL ELECTRONICS, INC. NEITHER THIS SHEET NOR THE INFORMATION IT CONTAINS MAY BE USED BY OR DISCLOSED TO ANY THIRD PARTY WITHOUT PRIOR WRITTEN CONSENT OF COMPAL ELECTRONICS, INC.

Compal Electronics, Inc.
Title: 1.5V/VGA_CORE
Size | Document Number: LA-1911 | Rev: 0.2
Date: Friday, August 08, 2003 | Sheet 50 of 57

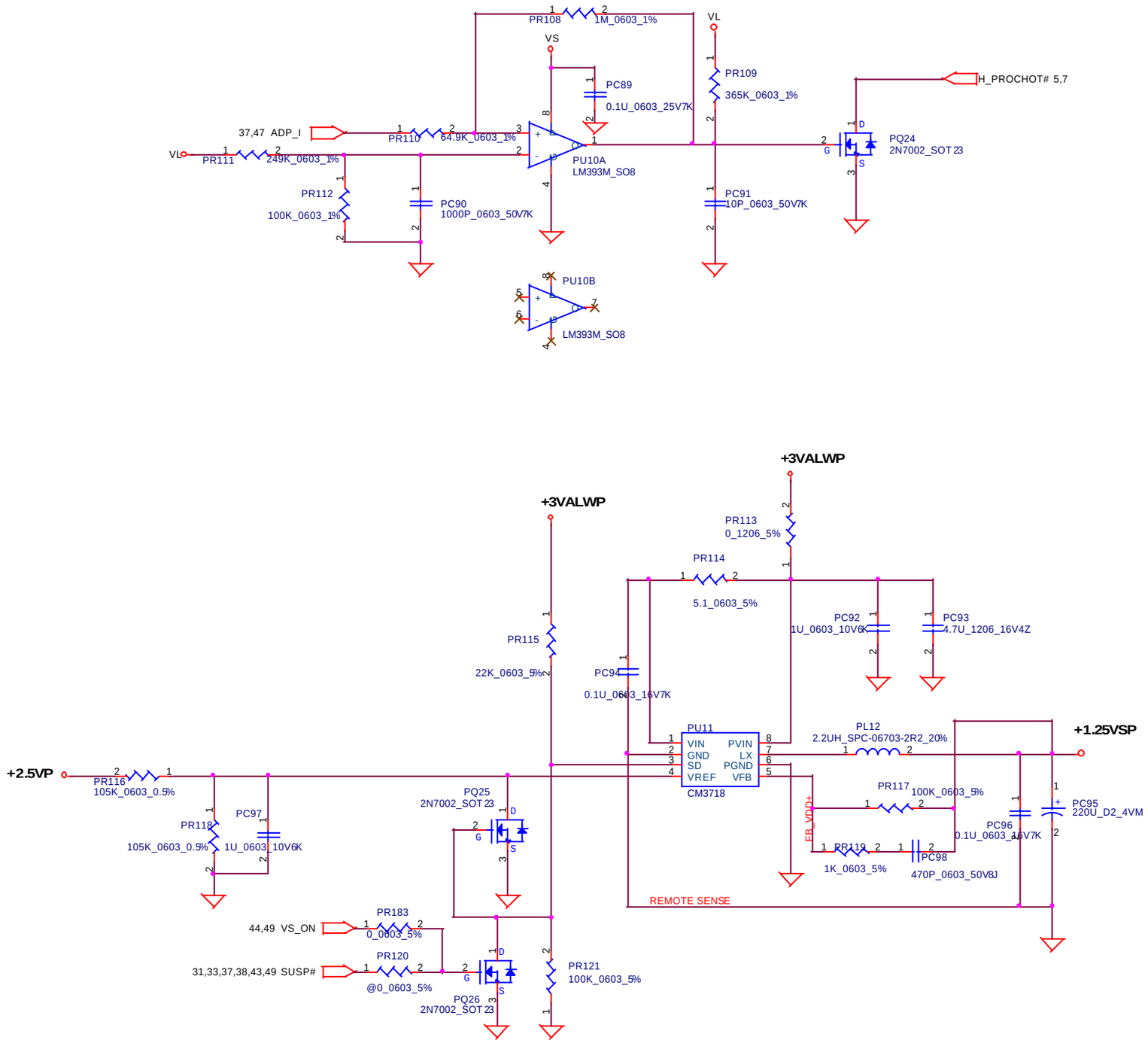

THIS SHEET OF ENGINEERING DRAWING IS THE PROPRIETARY PROPERTY OF COMPAL ELECTRONICS, INC. AND CONTAINS CONFIDENTIAL AND TRADE SECRET INFORMATION. THIS SHEET MAY NOT BE TRANSFERRED FROM THE CUSTODY OF THE COMPETENT DIVISION OF R&D DEPARTMENT EXCEPT AS AUTHORIZED BY COMPAL ELECTRONICS, INC. NEITHER THIS SHEET NOR THE INFORMATION IT CONTAINS MAY BE USED BY OR DISCLOSED TO ANY THIRD PARTY WITHOUT PRIOR WRITTEN CONSENT OF COMPAL ELECTRONICS, INC.

Compal Electronics, Inc.

Title: DDR_1.25V/THROTTLING

Size | Document Number: LA-1911 | Rev: 0.2

Date: Friday, August 08, 2003 | Sheet 51 of 57

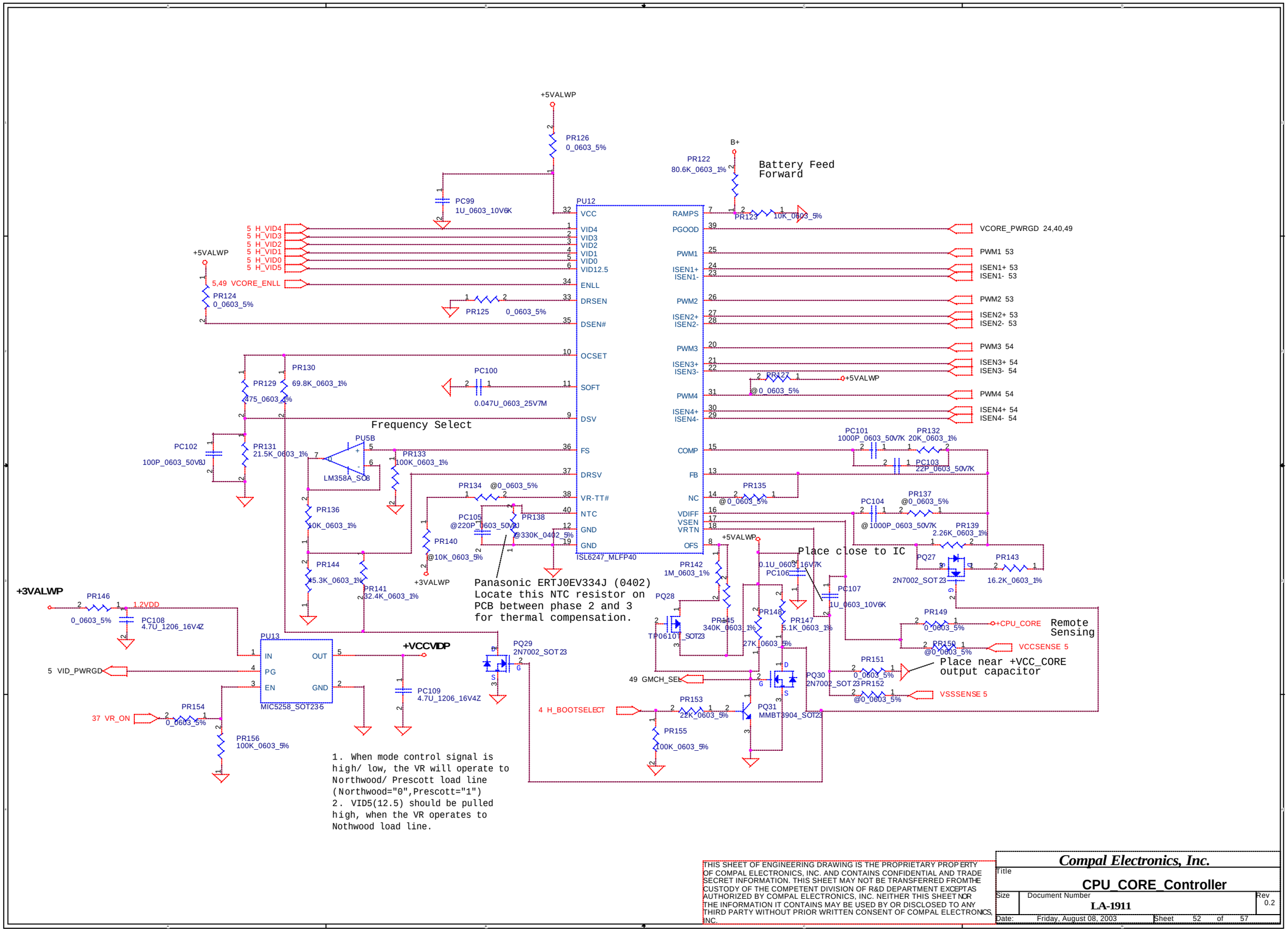

1. When mode control signal is high/ low, the VR will operate to Northwood/ Prescott load line (Northwood="0",Prescott="1")
2. VID5(12.5) should be pulled high, when the VR operates to Nothwood load line.

THIS SHEET OF ENGINEERING DRAWING IS THE PROPRIETARY PROPERTY OF COMPAL ELECTRONICS, INC. AND CONTAINS CONFIDENTIAL AND TRADE SECRET INFORMATION. THIS SHEET MAY NOT BE TRANSFERRED FROM THE CUSTODY OF THE COMPETENT DIVISION OF R&D DEPARTMENT EXCEPT AS AUTHORIZED BY COMPAL ELECTRONICS, INC. NEITHER THIS SHEET NOR THE INFORMATION IT CONTAINS MAY BE USED BY OR DISCLOSED TO ANY THIRD PARTY WITHOUT PRIOR WRITTEN CONSENT OF COMPAL ELECTRONICS, INC.

Compal Electronics, Inc.

Title: **CPU_CORE_Controller**

Size | Document Number: **LA-1911** | Rev: 0.2

Date: Friday, August 08, 2003 | Sheet 52 of 57

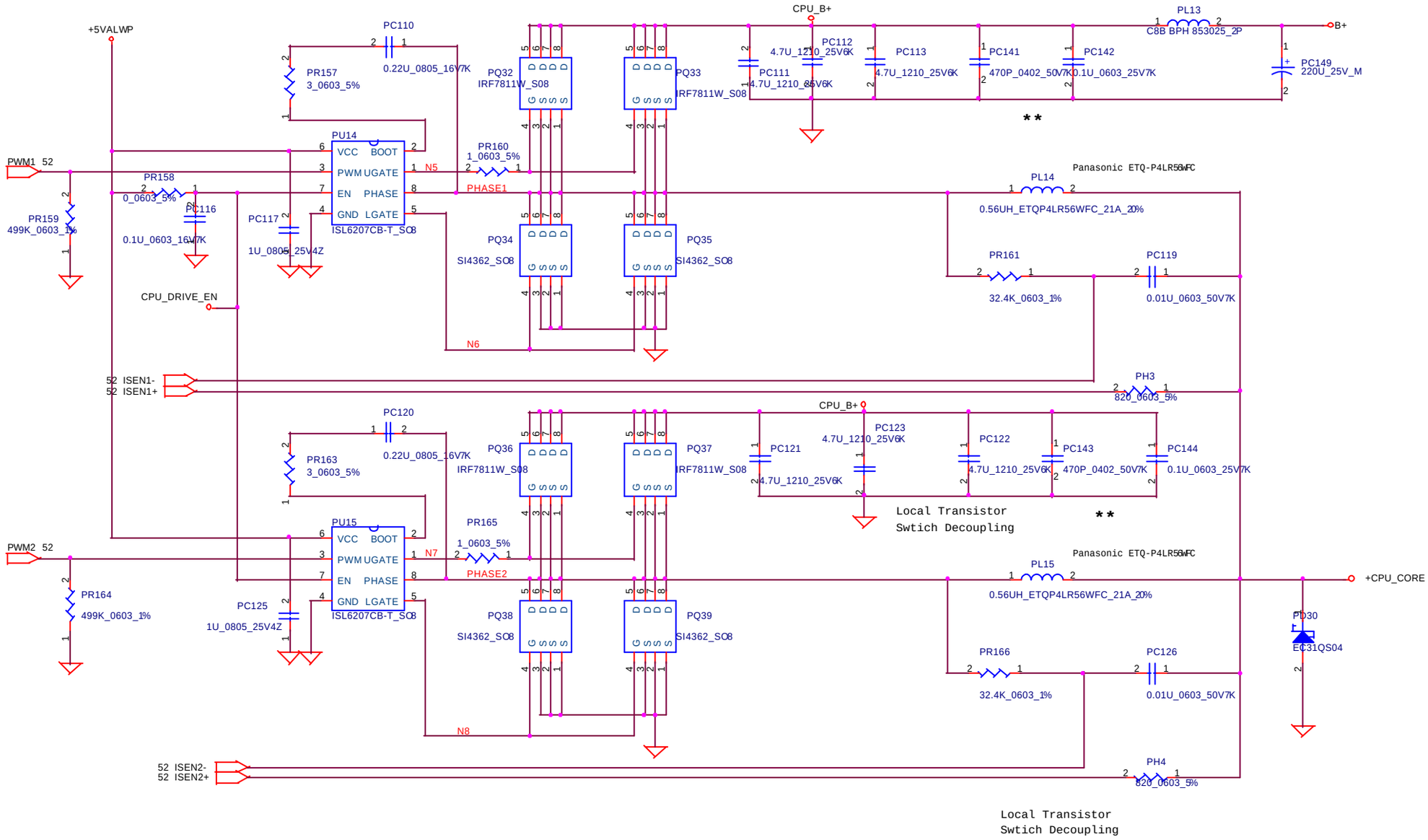

THIS SHEET OF ENGINEERING DRAWING IS THE PROPRIETARY PROPERTY OF COMPAL ELECTRONICS, INC. AND CONTAINS CONFIDENTIAL AND TRADE SECRET INFORMATION. THIS SHEET MAY NOT BE TRANSFERRED FROM THE CUSTODY OF THE COMPETENT DIVISION OF R&D DEPARTMENT EXCEPT AS AUTHORIZED BY COMPAL ELECTRONICS, INC. NEITHER THIS SHEET NOR THE INFORMATION IT CONTAINS MAY BE USED BY OR DISCLOSED TO ANY THIRD PARTY WITHOUT PRIOR WRITTEN CONSENT OF COMPAL ELECTRONICS, INC.

Compal Electronics, Inc.

Title	CPU_CORE_Power stage1	
Size	Document Number: LA-1911	Rev 0.2
Date: Friday, August 08, 2003	Sheet 53 of 57	

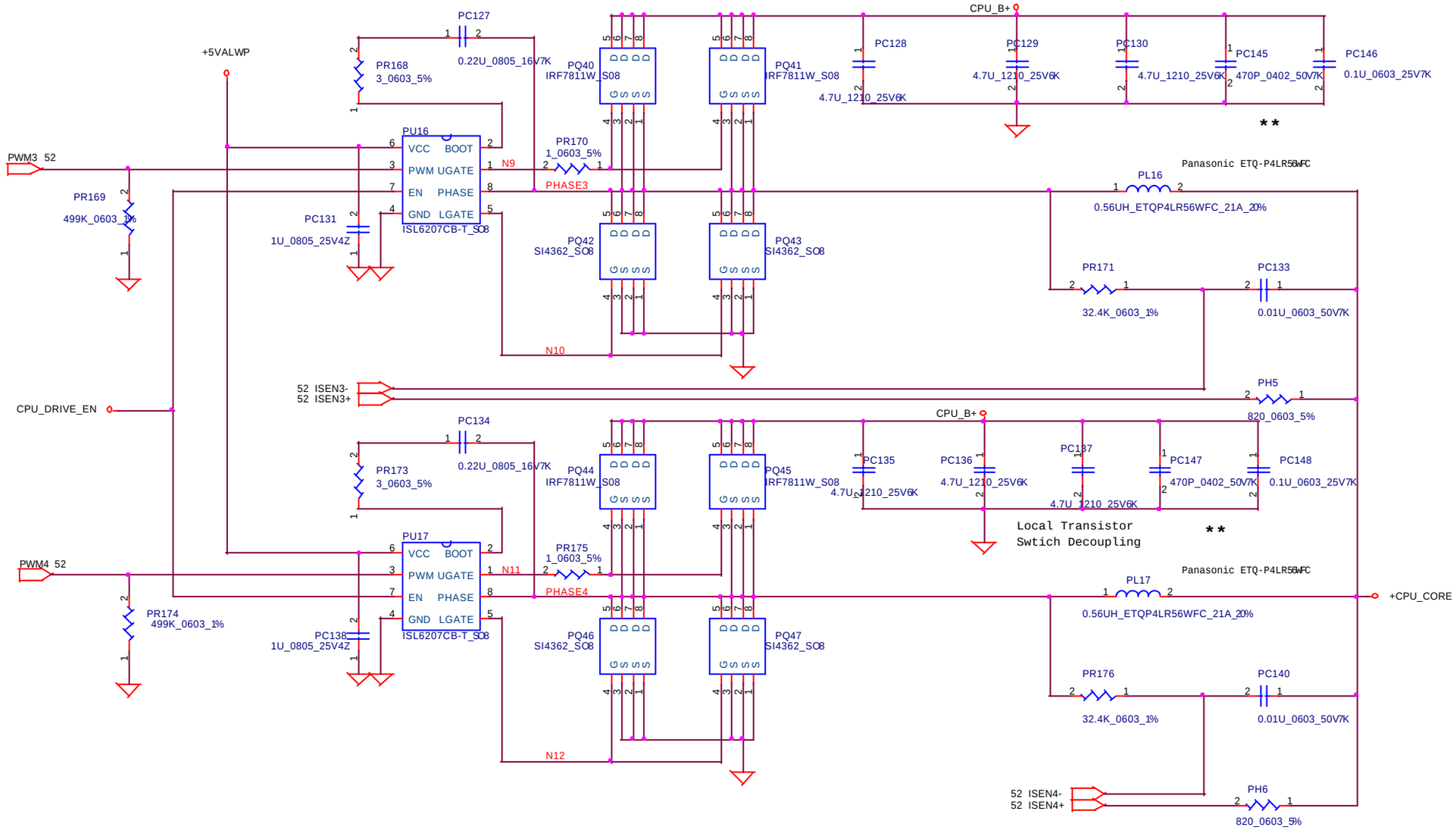

THIS SHEET OF ENGINEERING DRAWING IS THE PROPRIETARY PROPERTY OF COMPAL ELECTRONICS, INC. AND CONTAINS CONFIDENTIAL AND TRADE SECRET INFORMATION. THIS SHEET MAY NOT BE TRANSFERRED FROM THE CUSTODY OF THE COMPETENT DIVISION OF R&D DEPARTMENT EXCEPT AS AUTHORIZED BY COMPAL ELECTRONICS, INC. NEITHER THIS SHEET NOR THE INFORMATION IT CONTAINS MAY BE USED BY OR DISCLOSED TO ANY THIRD PARTY WITHOUT PRIOR WRITTEN CONSENT OF COMPAL ELECTRONICS, INC.

Compal Electronics, Inc.

Title	CPU_CORE_Power stage2	
Size	Document Number LA-1911	Rev 0.2
Date: Friday, August 08, 2003	Sheet 54 of 57	

DAL00 PIR LIST

********** Rev0.1 PIR List **********

04/01/03 Written by Po

P52:Add Oz168 for reservation

04/09/13 Written by Jei
P36:Swap RP142 Pin 10 <-> 6; Pin 7 <-> 8
P36:Swap CP4 Pin 4 <-> 1; Pin 2 <-> 3

POWER PIR LIST

	page	Reason for change	Modify list
EVT2	49,50,51	Modify power sequence for H/W request	Delete PR89,PR90,PR120 and add PR179,PR180,PR181,PR183
	49	Design change VTT_GMCH OCP point	Change PR95 from 75K to 220K
	47	Design change charger voltage	Change PR63 from 47.5K to 95.3K and add PR184
	51	Increase throttling speed	Change PC91 from 1000P to 10P
	50	Change VGA_CORE voltage for H/W request	Change PR106 from 13.3K to 6.49K;PR103 from 5.62K to 3.92K
	53,54	Solve CPU_CORE noise for EMI request	Add 470P at location PC141,PC143,PC145,PC147 Add 0.1U at location PC142,PC144,PC146,PC148
	53,54	Update BOM	Change PQ34,PQ35,PQ38,PQ39,PQ42,PQ43,PQ46,PQ47 from IRF7832 to SI4362
	52		Change PC100 from 0.033U to 0.056U; delete PR138
	47		Delete PC37; change PR43 from SD021100D00 to SD036100D00
	48		Change PC60,PC61 from SE026473K06 to SE023473NT1
	53,54	To prevent shortage	Change PC142,PC144,PC146,PC148 from SE072104K00 to SE042104K01
PVT	53,54	Change high side MOSFET and add gate/boot resistor for EMI request	Change PQ32,PQ33,PQ36,PQ37,PQ40,PQ41,PQ44,PQ45 from IRF7821 to IRF7811W, change PR157,PR163,PR168,PR173 from 0ohm to 3ohm, change PR160,PR165,PR170,PR175 from 0ohm to 1ohm
	49	Solve power sequency problem for H/W request	Delete PR180 and add PR177(0ohm)
	50	Change VGA_CORE voltage for H/W request	Change PR106 from 6.49K to 0ohm (for X6326251001_NV33M/34M)
	46	Change CPU/Battery's OTP point for Thermal team request	Change PR39 from 16.9K to 14.7K, PR32 from 2.8K to 3.32K PR41 from 3.24K to 3.48K
	53	Solve LAN transmission has high frequency noise issue	Add PC149
	47,52	Update BOM	Change PD17 from SC1B051L000 to SC11QS04000, delete PR150,PR152 and add PR149,PR151(0ohm),delete PC105,change PC100 from 0.056U to 0.047U
PVT(memo)	50	Change VGA_CORE voltage for H/W request	Change PR103 from 3.4K to 4.53K, PR106 from 4.53K to 9.09K (for X6326251002_NV31M)
	52	Change CPU_CORE OCP point for QAD request	Change PR131 from 27.4K to 21.5K
PVT(memo)	50	Modify CPU_CORE load line	Change PR139 from 1.87K to 2.26K
	52	Solved CPU_CORE shutdown issue	Add PC103

PROPRIETARY NOTE THIS SHEET OF ENGINEERING DRAWING IS THE PROPRIETARY PROPERTY OF COMPAL ELECTRONICS, INC. AND CONTAINS CONFIDENTIAL AND TRADE SECRET INFORMATION. THIS SHEET MAY NOT BE TRANSFERRED FROM THE CUSTODY OF THE COMPETENT DIVISION OF R&D DEPARTMENT EXCEPT AS AUTHORIZED BY COMPAL ELECTRONICS, INC. NEITHER THIS SHEET NOR THE INFORMATION IT CONTAINS MAY BE USED BY OR DISCLOSED TO ANY THIRD PARTY WITHOUT PRIOR WRITTEN CONSENT OF COMPAL ELECTRONICS, INC.

Rev 0.2

Page	Location	From	To
5	Modify L5,L6	10U	4.7U
6	DEL C20,C21	22U	X
6	DEL 470U	470U	X
11	Modify L15	0.82U	4.7U
26	MODIFY C49,C488 C528	0.01U	0.1U
26	DEL C50	0.01U	X
26	ADD C787	X	1000P
26	ADD C788	X	4.7U
27	ADD D21	X	RB751V
27	ADD C83	X	0.1U
28	ADD C797,C798 C799	X	0.1U
31	DEL L42,L43 L44	CHB2012U170	X
31	ADD L10,L11 L12	X	CHB2012U170
31	ADD U57	X	74HCT4066
31	ADD R617,R618 R619,R620 R621,R622 R623,R624	X	1M
31	MODIFY C781	0.01U	0.1U
32	MODIFY R238,R241	1.3K	1.5K
38	CHANGE U50	SN74HCT273PW	SN74HCT374PW
38	CHANGE	C729	R542
38	CHANGE	R542	C729
38	ADD C793	X	100P
38	ADD C790,C791 C792	X	220P

Page	Location	From	To
38	ADD L54	X	FCM2012C-800
38	ADD C789	X	1U
38	ADD U56	X	SST39VF080-70
38	DEL U13	29F040	X
39	MODIFY Q6	DTA114YKA	2N7002
40	ADD R625	X	10K
40	MODIFY R464	20K	33K
40	MODIFY C629	0.33U	1U
40	MODIFY R465	100K	68K
40	ADD L55,L56	X	CHB1608U301
43	ADD Q23,Q38 Q39,Q40 Q46	X	2N7002
43	ADD R450,R516 R457,R452 R272	X	470 Ohm
43	ADD R612,R613	X	10K
43	ADD L55,L56 L57	X	BLM11A601S
44	ADD C794,C795	X	1U

Compal Electronics, Inc.		
Title: **PIR**		
Size: Custom	Document Number: **LA-1911**	Rev: **0.2**
Date: Friday, August 08, 2003	Sheet 56 of 57	

Rev 1.0

Page	Location	From	To	Page	Location	From	To
31	ADD U61	X	SI9182DH				
31	ADD C809,C811	X	4.7U				
31	ADD C810,C812	X	0.1U				
31	ADD R637	X	69.8K				
31	ADD R638	X	24K				

Compal Electronics, Inc.		
Title: **PIR**		
Size: Custom	Document Number: **LA-1911**	Rev: **1.0**
Date: Friday, August 08, 2003	Sheet 57 of 57	

Rev 0.3

Page	Location	From	To	Page	Location	From	To
22	ADD R627	X	0 Ohm				
22	ADD U58	X	TC7SH08FU				
22	ADD C806	X	0.1U				
22	ADD R628	X	10K				
31	ADD C807	X	1U				
31	DEL Q15	SI2302DS	X				
31	ADD U59	X	SI4800DY				
31	ADD R634,R635	X	0 Ohm				
32	ADD R629,R630	X	0 Ohm				
32	ADD R633	X	10K				
40	Modify R445	180K	820K				
40	ADD R631	X	0 Ohm				
40	ADD R632	X	0 Ohm				
40	ADD R625	X	10K				
44	DEL C795	1U	X				
44	MODIFY R606	68K	0 Ohm				

Compal Electronics, Inc.		
Title: **PIR**		
Size: Custom	Document Number: **LA-1911**	Rev: **0.3**
Date: Friday, August 08, 2003	Sheet 57 of 57	