www.laptopblue.vn

1. ALL RESISTANCE VALUES ARE IN OHMS, 0.1 WATT +/- 5%.
2. ALL CAPACITANCE VALUES ARE IN MICROFARADS.
3. ALL CRYSTALS & OSCILLATOR VALUES ARE IN HERTZ.

M42C MLB

REV	ZONE	ECN	DESCRIPTION OF CHANGE	CK APPD / DATE	ENG APPD / DATE
C		474680	PRODUCTION RELEASED	11/27/06	?

11/27/2006 POST RAMP WITH LOCKED BOOTROM

Page (.csa)		Contents	DRI	Sync	Date
1	1	Table of Contents	RX	N/A	N/A
2	2	SYSTEM BLOCK DIAGRAM	RX	MASTER	5/23/05
3	3	Power Block Diagram	MK	POWER	06/30/2005
4	4	CONFIGURATION OPTIONS	RX	SMC	07/18/2005
5	5	FUNC TEST 1 OF 2	RX	TP	07/25/2005
6	6	SIGNAL ALIAS /RESET	RX	ENET	08/19/2005
7	7	CPU 1 OF 2-FSB	RX	MASTER	05/03/2005
8	8	CPU 2 OF 2-PWR/GND	MK	MASTER	05/03/2005
9	9	CPU DECAPS & VID<>	MK	SMC	08/19/2005
10	10	CPU MISC1-TEMP SENSOR	ES	ENET	08/19/2005
11	11	CPU ITP700FLEX DEBUG	RX	MASTER	5/23/05
12	12	NB CPU Interface	MK	NB	07/25/2005
13	13	NB PEG / Video Interfaces	DK	NB	07/25/2005
14	14	NB Misc Interfaces	RX	NB	08/15/2005
15	15	NB DDR2 Interfaces	LT	NB	07/25/2005
16	16	NB Power 1	DK	NB	07/25/2005
17	17	NB Power 2	DK	NB	07/25/2005
18	18	NB Grounds	DK	NB	07/25/2005
19	19	NB (GM) Decoupling	DK	NB	06/22/2005
20	20	NB Config Straps	DK	NB	06/28/2005
21	21		RX	SB	08/05/2005
22	22		RX	ENET	11/16/2005
23	23		RX	ENET	11/28/2005
24	24		RX	SB	08/05/2005
25	25		RX	SB	06/28/2005
26	26	SB Misc	RX	NB	07/26/2005
27	27	M42 SMBUS CONNECTIONS	ES	ENET	08/30/2005
28	28	DDR2 SO-DIMM Connector A	LT	MEMORY	06/20/2005
29	29	DDR2 SO-DIMM Connector B	LT	MEMORY	06/20/2005
30	30	Memory Active Termination	LT	MEMORY	06/20/2005
31	31	Memory Vtt Supply	LT	(MASTER)	(MASTER)
32	33	CLOCKS	DK	CLOCK	06/03/2005
33	34	CLOCK TERMINATION	DK	CLOCK	06/06/2005
34	38	PATA CONNECTOR	ES	ENET	11/01/2005
35	39	SATA CONNECTOR	ES	ENET	11/14/2005
36	41	ETHERNET CONTROLLER	ES	ENET	12/06/2005
37	42	ETHERNET CONNECTOR	ES	ENET	11/14/2005
38	44	FIREWIRE CONTROLLER	ES	ENET	08/30/2005
39	45	FIREWIRE PORT	ES	ENET	11/16/2005
40	49	CONNECTOR MISC	ES	ENET	11/16/2005
41	51	IR CONTROLLER	ES	ENET	11/09/2005
42	52		ES	ENET	11/01/2005
43	53		ES	ENET	08/19/2005
44	54	BLUETOOTH INTERFACE	MK	ENET	08/29/2005
45	58	SMC	MK	SMC	08/18/2005
46	59	SMC SUPPORT	LD	SMC	08/23/2005
47	60	LPC+ Debug Connector	MK	NB	06/30/2005
48	61	CPU Current & Voltage Sense	ES	ENET	08/30/2005
49	62	TEMPERATURE SENSE	RX	ENET	11/09/2005
50	63	SPI BOOTROM	ES	MASTER	5/23/05
51	65	Fan	MK	ENET	11/10/2005
52	66	SMS	RX	SMC	08/23/2005
53	67	TPM	DK	SMC	07/18/2005
54	68	AUDIO: CODEC	DK	M42AUDIO	08/05/2006
55	72	AUDI0: SPEAKER AMP	DK	M42AUDIO	08/05/2006
56	73	AUDIO: JACK	DK	M42AUDIO	08/05/2006
57	74	AUDIO: JACK TRANSLATORS	MK	M42AUDIO	08/05/2006
58	75	IMVP6 CPU VCore Regulator	MK	POWER	07/13/2005
59	76	5V / 3.3V Power Supply	MK	POWER	07/13/2005
60	77	2.5V/1.2V Regulator	MK	ENET	12/06/2005
61	78	1.8V Supply	MK	POWER	07/13/2005
62	79	1.5V / 1.05V Power Supply	MK	POWER	07/13/2005
63	80	S3/S0 FETS, G3H SUPPLY	MK	ENET	08/30/2005
64	81	Power Conn / Alias	MK	ENET	11/16/2005
65	82	DC-In & Battery Connectors	MK	POWER	07/13/2005
66	83	PBUS Supply/Battery Charger	ES	SMC	08/19/2005
67	94	INVERTER,LVDS,TMDS	DK	GRAPHIC	06/06/2005
68	95	EXTERNAL TMDS	DK	GRAPHIC	06/06/2005
69	98	MINI-DVI CONNECTOR		EUGENE	05/21/05
70	99	Cross Reference Page			
71	100	Cross Reference Page			
72	101	Cross Reference Page			
73	102	Cross Reference Page			
74	103	Cross Reference Page			
75	104	Cross Reference Page			
76	105	Cross Reference Page			
77	106	Cross Reference Page			
78	107	Cross Reference Page			

EE DRIS:

RX-RAYMOND XU
DK-DINESH KUMAR
RC-RAY CHANG
MK-MARC KLINGELHOFER
LT-LAWRENCE TAN
ES-ERIC SMITH

LD-LINDA DUNN

Schematic / PCB #'s

PART#	QTY	DESCRIPTION	REFERENCE DESIGNATOR(S)	BOM OPTION
051-7173	1	SCHEM,MACBOOK,MLB	SCH	
820-1889	1	PCBF,MACBOOK,MLB	PCB	

DRAWING
TITLE=U230
ABBREV=DRAWING
LAST_MODIFIED=Mon Nov 27 14:57:31 2006

DIMENSIONS ARE IN MILLIMETERS
XX ±
X.XX ±
X.XXX ±
ANGLES ±
DO NOT SCALE DRAWING

THIRD ANGLE PROJECTION

METRIC

DRAFTER		DESIGN CK	
ENG APPD		MFG APPD	
QA APPD		DESIGNER	
RELEASE		SCALE NONE	

MATERIAL/FINISH NOTED AS APPLICABLE

SIZE D

Apple Computer Inc.

NOTICE OF PROPRIETARY PROPERTY

THE INFORMATION CONTAINED HEREIN IS THE PROPRIETARY PROPERTY OF APPLE COMPUTER, INC. THE POSSESSOR AGREES TO THE FOLLOWING

I TO MAINTAIN THE DOCUMENT IN CONFIDENCE
II NOT TO REPRODUCE OR COPY IT
III NOT TO REVEAL OR PUBLISH IN WHOLE OR PART

TITLE
SCHEM,MLB,MACBOOK

DRAWING NUMBER 051-7173 REV. C

SHT 1 OF 108

www.laptopblue.vn

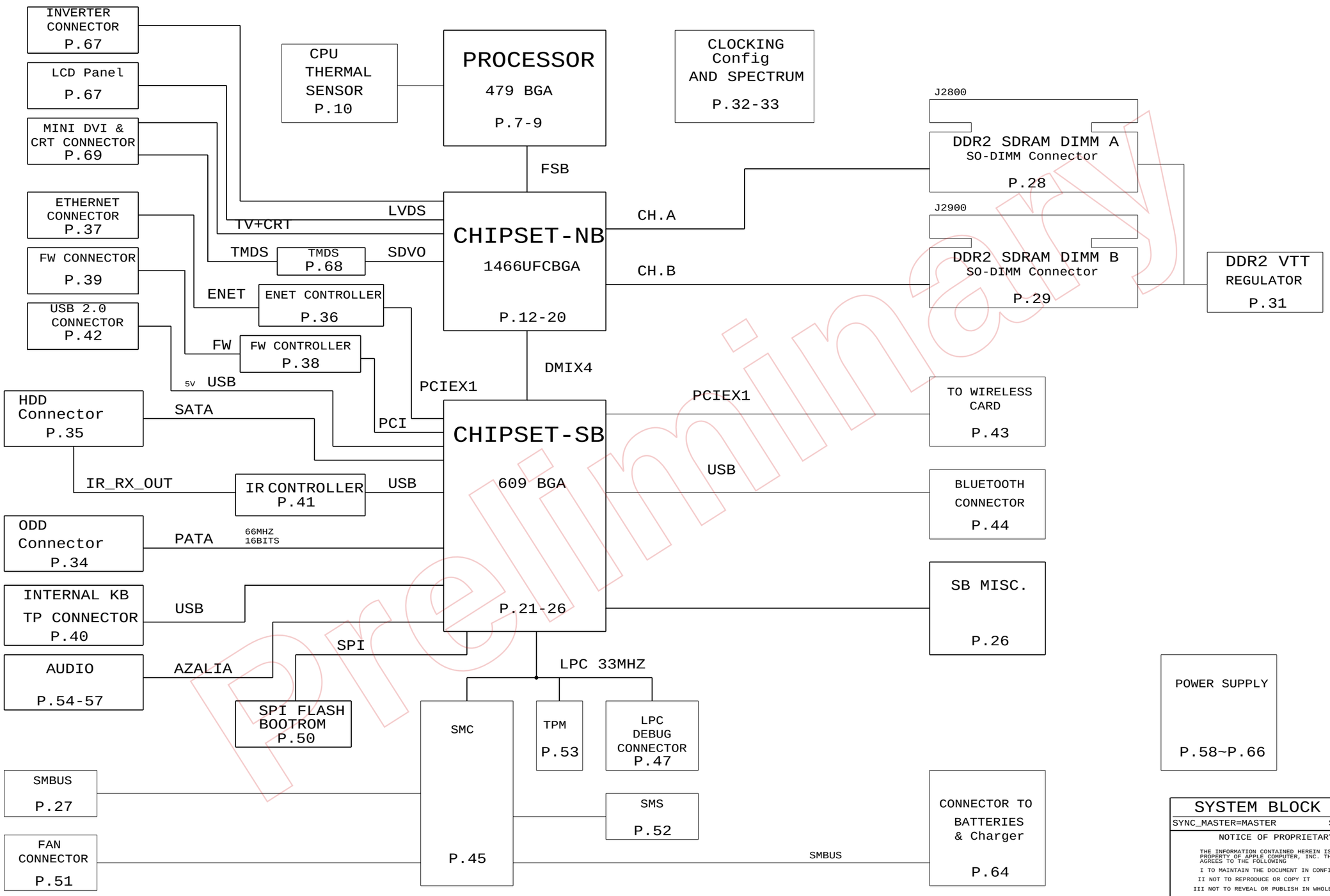

Preliminary

SYSTEM BLOCK DIAGRAM

SYNC_MASTER=MASTER SYNC_DATE=5/23/05

NOTICE OF PROPRIETARY PROPERTY

THE INFORMATION CONTAINED HEREIN IS THE PROPRIETARY PROPERTY OF APPLE COMPUTER, INC. THE POSSESSOR AGREES TO THE FOLLOWING

I TO MAINTAIN THE DOCUMENT IN CONFIDENCE
II NOT TO REPRODUCE OR COPY IT
III NOT TO REVEAL OR PUBLISH IN WHOLE OR PART

APPLE COMPUTER INC.

SIZE	DRAWING NUMBER	REV.
D	051-7173	C
SCALE NONE	SHT 2 OF 108	

www.laptopblue.vn

M42A POWER SYSTEM ARCHITECTURE

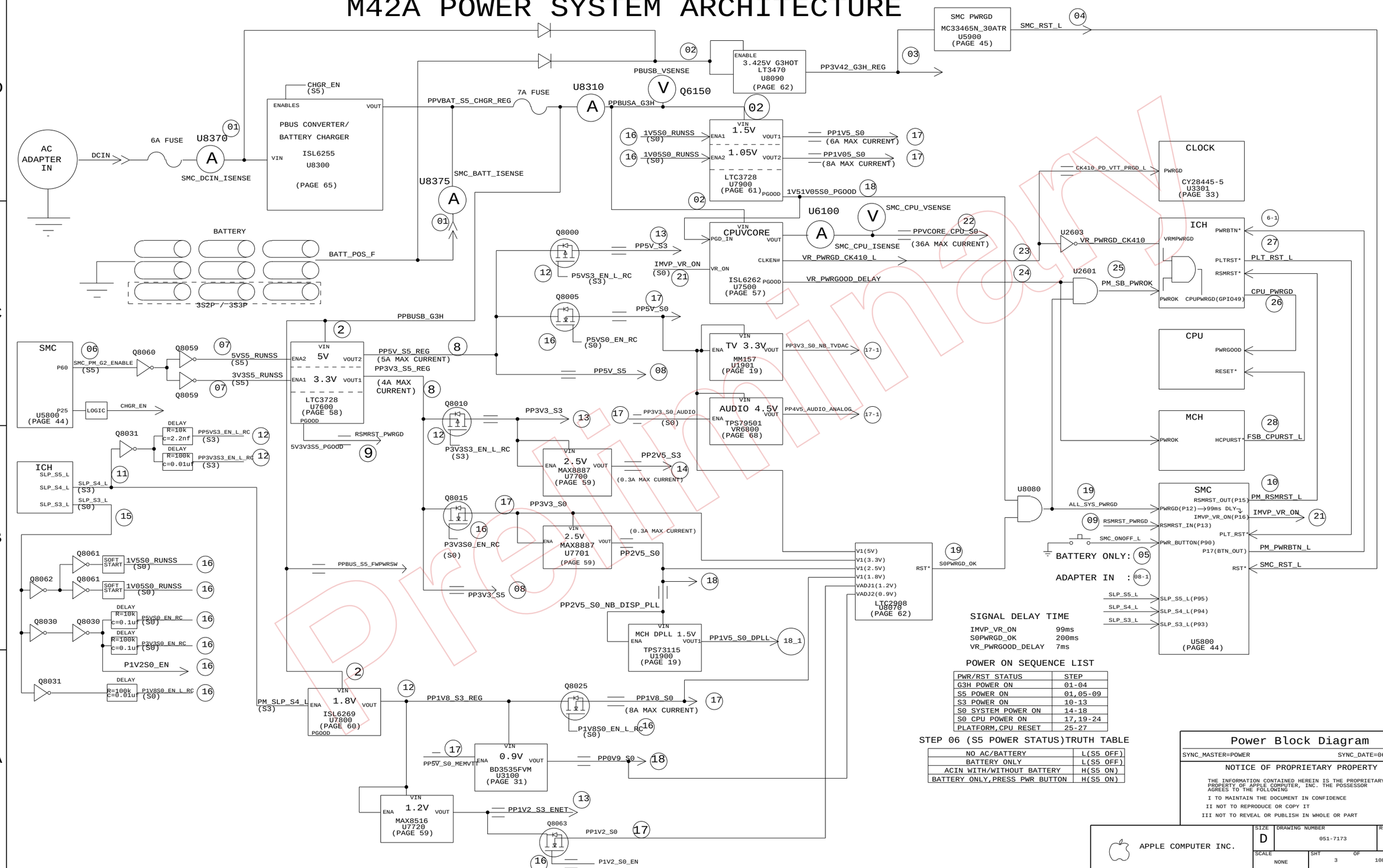

SIGNAL DELAY TIME

IMVP_VR_ON	99ms
S0PWRGD_OK	200ms
VR_PWRGOOD_DELAY	7ms

POWER ON SEQUENCE LIST

PWR/RST STATUS	STEP
G3H POWER ON	01-04
S5 POWER ON	01,05-09
S3 POWER ON	10-13
S0 SYSTEM POWER ON	14-18
S0 CPU POWER ON	17,19-24
PLATFORM,CPU RESET	25-27

STEP 06 (S5 POWER STATUS)TRUTH TABLE

NO AC/BATTERY	L(S5 OFF)
BATTERY ONLY	L(S5 OFF)
ACIN WITH/WITHOUT BATTERY	H(S5 ON)
BATTERY ONLY,PRESS PWR BUTTON	H(S5 ON)

Power Block Diagram

SYNC_MASTER=POWER SYNC_DATE=06/30/2005

NOTICE OF PROPRIETARY PROPERTY

THE INFORMATION CONTAINED HEREIN IS THE PROPRIETARY PROPERTY OF APPLE COMPUTER, INC. THE POSSESSOR AGREES TO THE FOLLOWING

I TO MAINTAIN THE DOCUMENT IN CONFIDENCE

II NOT TO REPRODUCE OR COPY IT

III NOT TO REVEAL OR PUBLISH IN WHOLE OR PART

APPLE COMPUTER INC.

SIZE	DRAWING NUMBER	REV.
D	051-7173	C
SCALE NONE	SHT 3 OF 108	

Preliminary

www.laptopblue.vn

Page Notes

Power aliases required by this page:
(NONE)

Signal aliases required by this page:
(NONE)

BOM options provided by this page:
(NONE)

BOM OPTION

BOMOPTION	M42A GOOD ST MICRO 630-7795 EVT	M42A BETTER ST MICRO 630-7796 EVT	M42A BEST KIONIX 630-7799 EVT	M42A GOOD KIONIX 630-7798 EVT	M42A BETTER KIONIX 630-7736 EVT	M42A BEST ST MICRO 630-7797 EVT
1V51V05S0_CONT						
1V51V05S0_SKIP	V	V	V	V	V	V
5V3V3S3_CONT						
5V3V3S3_SKIP	V	V	V	V	V	V
ACCEL_KIONIX			V	V	V	
ACCEL_ST	V	V				V
INVERTER_BUF	V	V	V	V	V	V
INVERTER_UNBUF						
ITP						
LEMENU	V	V	V	V	V	V
MEMVTT_EN_PU	V	V	V	V	V	V
NBCFG_DMI_REVERSE						
NBCFG_DMI_X2						
NBCFG_DYN_ODT_DISABLE						
NBCFG_PEG_REVERSE						
NBCFG_SDVO_AND_PCIE						
NBCFG_VCC_1V5						
NO_REBOOT_MODE						
USB_C_OC_PU	V	V	V	V	V	V
USB_D_OC_PU	V	V	V	V	V	V
USB_E_OC_PU	V	V	V	V	V	V
GOOD	V			V		
BETTER		V			V	
BEST			V			V
M42A_PGM	V	V	V	V	V	V
ONEWIRE_PULLUP	V	V	V	V	V	V
ONEWIRE_PULLUP_OLD						
ONEWIRE_PU_PROT	V	V	V	V	V	V
ONEWIRE_PU_ACOK						
ONEWIRE_PWRCTL	V	V	V	V	V	V
ONEWIRE_ALWAYSON						
3V3_IND_2MM8	V	V	V	V	V	V
3V3_IND_3MM						
NORMAL	V	V		V	V	
FANCY			V			V
STANDOFF	V	V	V	V	V	V
FET_FDN6296	V	V	V	V	V	V
FET_STL8NH3LL						
GOOD-ST	V					
BETTER-ST		V				
BEST-KIONIX			V			
GOOD-KIONIX				V		
BETTER-KIONIX					V	
BEST-ST						V
TPM						
PVT-DIMM						
POST-RAMP-DIMM35	V	V	V	V	V	V
M42						
M42A	V	V	V	V	V	V

BOARD STACK-UP AND CONSTRUCTION

Top		SIGNAL
2		GROUND
3		SIGNAL(High Speed)
4		SIGNAL(High Speed)
5		GROUND
6		POWER
7		POWER
8		GROUND
9		SIGNAL(High Speed)
10		SIGNAL(High Speed)
11		GROUND
BOTTOM		SIGNAL

MLB STACKUP

LAYER	THICKNESS (MM)	TRACE WIDTH (MM)
CONFORMAL_COAT	0.018	
L1 SIGNAL(TOP)	0.047	0.1
L1-L2	0.07	
L2 GROUND	0.014	---
L2-L3	0.076	
L3 SIGNAL	0.014	0.079
L3-L4	0.156	
L4 SIGNAL	0.014	0.079
L4-L5	0.076	
L5 GND	0.014	---
L5-L6	0.07	
L6 POWER	0.031	---
L6-L7	0.076	
L7 POWER	0.031	---
L7-L8	0.07	
L8 GROUND	0.014	---
L8-L9	0.076	
L9 SIGNAL	0.014	0.1
L9-L10	0.156	
L10 SIGNAL	0.014	0.1
L10-L11	0.076	
L11 GROUND	0.014	0.1
L11-L12	0.07	
L12 SIGNAL(BOTTOM)	0.047	0.1
CONFORMAL_COAT	0.018	
TOTAL	1.276	---

PART#	QTY	DESCRIPTION	REFERENCE DESIGNATOR(S)	BOM OPTION
337S3387	1	IC,MEROM,CPU B2 DC 1.83GHZ,479 PGA	U0700	GOOD
337S3389	1	IC,MEROM,CPU B2 DC 2.0GHZ,479 PGA	U0700	BETTER
337S3389	1	IC,MEROM,CPU B2 DC 2.0GHZ,479 PGA	U0700	BEST

PART#	QTY	DESCRIPTION	REFERENCE DESIGNATOR(S)	BOM OPTION
338S0268	1	IC,FW32306,1394A LINK,BGA,129P	U4400	LEMENU
338S0270	1	IC,88E8053,GIGABIT ENET XCVR,64P QFN, NO	U4101	LEMENU
359S0109	1	IC,SLG8LP436,CLOCK GEN,68PIN QFN	U3301	LEMENU

PART#	QTY	DESCRIPTION	REFERENCE DESIGNATOR(S)	BOM OPTION
341S1942	1	IC, 16MBIT 8-PIN SPI SERIAL FLASH,SOIC8	U6301	M42A_PGM
341S1797	1	IC,EEPROM,SERIAL IIC,8KBIT,SO8	U4102	M42A_PGM
341S1946	1	IC,SMC,176P BGA,HS8/2116	U5800	M42A_PGM
341S1890	1	IC,PSOC+W/USB,56P,MLF,CY8C24794	U5100	M42A_PGM

PART#	QTY	DESCRIPTION	REFERENCE DESIGNATOR(S)	CRITICAL	BOM OPTION
826-4393	1	LBL,P/N LABEL,PCB,28MMX6MM	EEE:WES	CRITICAL	GOOD-ST
826-4393	1	LBL,P/N LABEL,PCB,28MMX6MM	EEE:WET	CRITICAL	BETTER-ST
826-4393	1	LBL,P/N LABEL,PCB,28MMX6MM	EEE:WEW	CRITICAL	BEST-KIONIX
826-4393	1	LBL,P/N LABEL,PCB,28MMX6MM	EEE:WEV	CRITICAL	GOOD-KIONIX
826-4393	1	LBL,P/N LABEL,PCB,28MMX6MM	EEE:W6V	CRITICAL	BETTER-KIONIX
826-4393	1	LBL,P/N LABEL,PCB,28MMX6MM	EEE:WEU	CRITICAL	BEST-ST

CONFIGURATION OPTIONS

SYNC_MASTER=SMC SYNC_DATE=07/18/2005

NOTICE OF PROPRIETARY PROPERTY

THE INFORMATION CONTAINED HEREIN IS THE PROPRIETARY PROPERTY OF APPLE COMPUTER, INC. THE POSSESSOR AGREES TO THE FOLLOWING

I TO MAINTAIN THE DOCUMENT IN CONFIDENCE

II NOT TO REPRODUCE OR COPY IT

III NOT TO REVEAL OR PUBLISH IN WHOLE OR PART

APPLE COMPUTER INC.

SIZE	DRAWING NUMBER	REV.
D	051-7173	C
SCALE NONE	SHT 4 OF 108	

Preliminary

www.laptopblue.vn

Functional Test Points

Power Supply NO_TESTs

NO_TEST

I93		IMVP6_RBIAS	58
I94		IMVP6_COMP	58
I95		5VS5_RUNSS	59 63
I96		1V5S0_RUNSS	62 63
I101		1V8S3_COMP	61
I102		1V8S3_FSET	61
I103	TRUE	3V3S5_COMP	
I104	TRUE	3V3S5_FSET	
I106	TRUE	1V05S0_COMP	
I105	TRUE	1V05S0_FSET	
I107	TRUE	P3V42G3H_FB	63

CLOCK NO_TESTS

NO_TEST

I111	TRUE	CK410_CPU0_N	32 33
I112	TRUE	CK410_CPU0_P	32 33
I113	TRUE	CK410_CPU1_N	32 33
I115	TRUE	CK410_CPU1_P	32 33
I114	TRUE	CK410_CPU2_ITP_SRC10_N	32 33
I116	TRUE	CK410_CPU2_ITP_SRC10_P	32 33
I117	TRUE	CK410_DOT96_27M_N	32 33
I118	TRUE	CK410_DOT96_27M_P	32 33
I119	TRUE	CK410_LVDS_N	32 33
I120	TRUE	CK410_LVDS_P	32 33
I122	TRUE	CK410_PCI4_CLK_SPN	
I122	TRUE	CK410_PCIF1_CLK	32 33
I123	TRUE	CK410_SRC1_N_SPN	6
I123	TRUE	CK410_SRC1_P_SPN	6
I125	TRUE	CK410_SRC2_N	32 33
I125	TRUE	CK410_SRC2_P	32 33
I185	TRUE	CK410_SRC3_N_SPN	6
I185	TRUE	CK410_SRC3_P_SPN	6
I186	TRUE	CK410_SRC4_N	32 33
I187	TRUE	CK410_SRC4_P	32 33
I188	TRUE	CK410_SRC5_N	32 33
I189	TRUE	CK410_SRC5_P	32 33
I190	TRUE	CK410_SRC6_N	32 33
I191	TRUE	CK410_SRC6_P	32 33
I192	TRUE	CK410_SRC7_N_SPN	6
I193	TRUE	CK410_SRC7_P_SPN	6
I194	TRUE	CK410_SRC8_N	32 33
I195	TRUE	CK410_SRC8_P	32 33
I196	TRUE	CK410_SRC_CLKREQ1_L_SPN	6
I197	TRUE	CK410_SRC_CLKREQ3_L_SPN	6
I198	TRUE	CK410_SRC_CLKREQ8_L	32 33

FIREWARE NO_TESTS

NO_TEST

I199	TRUE	FW_B_TPA_N_SPN	6
I200	TRUE	FW_B_TPA_P_SPN	6
I201	TRUE	FW_B_TPBIAS_SPN	6
I202	TRUE	FW_B_TPB_N_SPN	6
I203	TRUE	FW_B_TPB_P_SPN	6
I204	TRUE	FW_C_TPA_N_SPN	6
I205	TRUE	FW_C_TPA_P_SPN	6
I206	TRUE	FW_C_TPBIAS_SPN	6
I207	TRUE	FW_C_TPB_N_SPN	6
I208	TRUE	FW_C_TPB_P_SPN	6

LVDS NO_TESTS

NO_TEST

I209	TRUE	LVDS_B_CLK_N_SPN	6
I210	TRUE	LVDS_B_CLK_P_SPN	6
I211	TRUE	LVDS_B_DATA_N0_SPN	6
I212	TRUE	LVDS_B_DATA_N1_SPN	6
I213	TRUE	LVDS_B_DATA_N2_SPN	6
I214	TRUE	LVDS_B_DATA_P1_SPN	6
I215	TRUE	LVDS_B_DATA_P2_SPN	6

ETHERNET NO_TESTS

NO_TEST

I216	TRUE	ENET_MDI_TRAN_P<2>	37
I217	TRUE	ENET_MDI_TRAN_N<2>	37
I218	TRUE	ENET_MDI_TRAN_P<3>	37

NO_TEST

I219	TRUE	SMC_FAN_3_TACH	45 46
I220	TRUE	ALS_LEFT	45 46

Fan Connectors

FUNC_TEST

I12	TRUE	=PP5V_S0_FAN_RT	51 64
I15	TRUE	FAN_RT_PWM	51
I16	TRUE	FAN_RT_TACH	51
I13	TRUE	=PP3V3_S0_FAN_RT	51 64
I108	TRUE	SMC_FAN_1_CTL	45 51
I109	TRUE	SMC_FAN_1_TACH	45 51

LPC+ Debug Connector

FUNC_TEST

I20	TRUE	=PP3V42_G3H_LPCPLUS	47 64
I19	TRUE	=PP5V_S0_LPCPLUS	47 64
I18	TRUE	LPC_AD<0>	21 45 47 53
I17	TRUE	LPC_AD<1>	21 45 47 53
I71	TRUE	LPC_FRAME_L	21 45 47 53
I72	TRUE	PM_CLKRUN_L	23 38 45 47 53
I73	TRUE	BOOT_LPC_SPI_L	22 45 47
I74	TRUE	SMC_TMS	45 46 47
I75	TRUE	DEBUG_RST_L	26 47
I76	TRUE	SMC_TRST_L	45 47
I77	TRUE	SMC_TDO	45 46 47
I78	TRUE	SMC_MD1	45 47
I79	TRUE	SMC_TX_L	45 46 47
I80	TRUE	FWH_INIT_L	6 21 47
I81	TRUE	PCI_CLK_PORT80_LPC	33 47
I82	TRUE	LPC_AD<2>	21 45 47 53
I83	TRUE	LPC_AD<3>	21 45 47 53
I84	TRUE	INT_SERIRQ	23 45 47 53
I85	TRUE	PM_SUS_STAT_L	23 45 46 47 53
I86	TRUE	SMC_TDI	45 46 47
I87	TRUE	SMC_TCK	45 46 47
I88	TRUE	SMC_RST_L	45 46 47
I89	TRUE	SMC_NMI	45 47
I91	TRUE	SMC_RX_L	45 46 47
I68	TRUE	SV_SET_UP	23 47

Other Func Test Points

FUNC_TEST

I62	TRUE	=PP1V05_S0_REG	62 64

SMBus FUNC_TEST

I182	TRUE	SMBUS_SMC_MLB_SCL	27
I183	TRUE	SMBUS_SMC_MLB_SDA	27

FIREWIRE FUNC_TEST

I192	TRUE	PPFW_SWITCH	39

SLEEP LED FUNC_TEST

I155	TRUE	SYS_LED_ANODE	35 46

SMC FUNC_TEST

I165	TRUE	SMC_LID	40 45 46 65
I164	TRUE	SMC_MANUAL_RST_L	46
I166	TRUE	SMC_CPU_VSENSE	45 48

Power Supply FUNC_TEST

I100	TRUE	ALL_SYS_PWRGD	26 45 63
I163	TRUE	PPVCORE_CPU_S0	64
I162	TRUE	PP1V05_S0	64
I160	TRUE	PP1V5_S0	64
I161	TRUE	PP1V8_S0	64
I159	TRUE	PP2V5_S0	64
I140	TRUE	PP3V3_S0	64
I169	TRUE	PP5V_S0	64
I167	TRUE	PP1V2_S3	64
I168	TRUE	PP1V8_S3	64
I170	TRUE	PP2V5_S3	64
I172	TRUE	PP3V3_S3	64
I171	TRUE	PP5V_S3	64
I177	TRUE	PP3V3_S5	64
I178	TRUE	PP5V_S5	64
I179	TRUE	PP3V42_G3H	64
I176	TRUE	PPBUSA_G3H	
I175	TRUE	PPBUSB_G3H	64
I174	TRUE	PP18V5_G3H	64
I101	TRUE	PP0V9_S0	64

Battery Digital Connector

FUNC_TEST

I1	TRUE	SMC_BS_ALRT_L	45 46 65
I3	TRUE	SMBUS_BATT_SCL_F	65
I4	TRUE	SMBUS_BATT_SDA_F	65
I2	TRUE	BATT_IN	
I117	TRUE	BATT_POS	65
I116	TRUE	BATT_NEG	65

Audio FUNC_TEST

I9	TRUE	PP5V_S0_AUDIO_PWR	
I13	TRUE	PP5V_S0_AUDIO	
I10	TRUE	GND_AUDIO_PWR	64
I21	TRUE	GND_AUDIO_CODEC	64
I22	TRUE	ACZ_SDATAIN<0>	21 54
I24	TRUE	ACZ_SDATAOUT	21 54
I23	TRUE	ACZ_BITCLK	21 54
I25	TRUE	ACZ_RST_L	21 54 57
I45	TRUE	ACZ_SYNC	21 54

Battery FUNC_TEST

I26	TRUE	SMC_BATT_ISET	45 66
I32	TRUE	SMC_BATT_CHG_EN	45 46 66
I31	TRUE	SMC_BC_ACOK	45 46 65 66
I33	TRUE	SMC_PS_ON	39 45 46 65
I36	TRUE	SMC_BATT_TRICKLE_EN_L	45 46 66
I38	TRUE	SYS_ONEWIRE	45 46 65

USB FUNC_TEST

I44	TRUE	TP_USBP_E	6
I47	TRUE	TP_USBN_E	6
I46	TRUE	TP_USBP_F	
I48	TRUE	TP_USBN_F	

DC-JACK FUNC_TEST

I57	TRUE	ACIN_ENABLE_GATE	65

Battery charger FUNC_TEST

I58	TRUE	PPVBAT_G3H_CHGR_OUT	66

INVERTER CONNECTOR FUNC_TEST

I60	TRUE	PPBUS_ALL_INV_CONN	67
I59	TRUE	INV_GND	67
I61	TRUE	PP5V_INV_F	67
I63	TRUE	INV_BKLIGHT_PWM_L	67

Preliminary

FUNC TEST 1 OF 2

NOTICE OF PROPRIETARY PROPERTY

THE INFORMATION CONTAINED HEREIN IS THE PROPRIETARY PROPERTY OF APPLE COMPUTER, INC. THE POSSESSOR AGREES TO THE FOLLOWING

I TO MAINTAIN THE DOCUMENT IN CONFIDENCE

II NOT TO REPRODUCE OR COPY IT

III NOT TO REVEAL OR PUBLISH IN WHOLE OR PART

APPLE COMPUTER INC.

SIZE	DRAWING NUMBER	REV.
D	051-7173	C

SCALE NONE | SHT 5 OF 108

www.laptopblue.vn

(EMI PAD FOR INVERTER GONNECTOR)

67 INVT_CHGND — 1 ZS0620 EMI-SPRING CLIP-SM-M42

NC — 1 ZS0621 SM (SPKR-MIC-CLIP-M42)

CHASSIS GND

BATTERY,AUDIO,DIP DIMM CONNECTOR CHASSIS GND

GND_CHASSIS_IO 6 — OMIT Z0606 5R2P3-7SQB 1

65 =GND_BATT_CHGND
56 =GND_CHASSIS_AUDIO_JACK
=GND_CHASSIS_AUDIO_SPKRCONN
57 =GND_CHASSIS_AUDIO_MIC
=GND_CHASSIS_AUDIO_SHIELD1
=GND_CHASSIS_AUDIO_SHIELD2
=GND_CHASSIS_AUDIO_SHIELD3
28 =GND_CHASSIS_DIPDIMM_LEFT

SATA,LVDS CONNECTOR CHASSIS GND

GND_CHASSIS_SATA 35 — OMIT Z0607 6P5R2P6-5P5B 1 (VOLTAGE=0V MAKE_BASE=TRUE)

67 =GND_CHASSIS_LVDS

1 C0607 0.1UF 10% 16V X5R 402 — 1 C0608 0.01uF 10% 16V CERM 402

DCIN CONNECTOR CHASSIS GND

GND_CHASSIS_DCIN — OMIT Z0602 5R2P3-7SQB 1 (VOLTAGE=0V MAKE_BASE=TRUE)

65 =GND_DCIN_CHGND
37 =GND_CHASSIS_RJ45
69 =GND_CHASSIS_TMDS_UPPER

1 C0630 0.1UF 10% 16V X5R 402

I/O CONNECTOR CHASSIS GND

GND_CHASSIS_IO 6 — OMIT Z0608 5P0R2P3-7BLB 1 (VOLTAGE=0V MAKE_BASE=TRUE)

39 =GND_CHASSIS_FW_DOWN
42 =GND_CHASSIS_USB

1 C0610 0.1UF 10% 16V X5R 402 — 1 C0611 0.01uF 10% 16V CERM 402

DIP DIMM CONNECTOR CHASSIS GND

GND_CHASSIS_CENTER — OMIT Z0610 5R2P3-7SQB 1 (VOLTAGE=0V MAKE_BASE=TRUE)

29 28 =GND_CHASSIS_DIPDIMM_CENTER

1 C0616 0.1UF 10% 16V X5R 402 — 1 C0617 0.01uF 10% 16V CERM 402

DIP DIMM CONNECTOR CHASSIS GND

GND_CHASSIS_RIGHT — OMIT Z0609 5R2P3-7SQB 1 (VOLTAGE=0V MAKE_BASE=TRUE)

29 =GND_CHASSIS_DIPDIMM_RIGHT

1 C0614 0.1UF 10% 16V X5R 402 — 1 C0615 0.01uF 10% 16V CERM 402

GND_CHASSIS_CPU — OMIT Z0601 5R2P3-7SQB 1

1 C0612 0.1UF 10% 16V X5R 402 — 1 C0613 0.01uF 10% 16V CERM 402

GND_CHASSIS_FANSCREW — OMIT Z0611 5R2P3-7B 1

1 C0618 0.1UF 10% 16V X5R 402 — 1 C0619 0.01uF 10% 16V CERM 402

DIGITAL GND SCREW HOLE

OMIT Z0603 STDOFF-4.5OD3.95H-1.1-3.7-TH1 — NB_RIGHT_DOWN_SCREW 1 — 1 R0612 0 5% 1/16W MF-LF 402 2

OMIT Z0604 STDOFF-4.5OD3.95H-1.1-3.7-TH1 — CPU_THERMAL_SCREW_UP 1 — 1 R0610 0 5% 1/16W MF-LF 402 2

OMIT Z0605 STDOFF-4.5OD3.95H-1.1-3.7-TH1 — CPU_THERMAL_SCREW_DOWN 1 — 1 R0611 0 5% 1/16W MF-LF 402 2

OMIT Z0621 STDOFF-4.5OD3.95H-1.1-3.7-TH1 — CPU_THERMAL_SCREW_RIGHT 1 — 1 R0621 0 5% 1/16W MF-LF 402 2

LVDS ALIASES

NO-CONNECT UNUSED LVDS INTERFACE PORTS

13 LVDS_B_CLK_N		LVDS_B_CLK_N_SPN	5
13 LVDS_B_CLK_P		LVDS_B_CLK_P_SPN	MAKE_BASE=TRUE
13 LVDS_B_DATA_N<0>		LVDS_B_DATA_N0_SPN	MAKE_BASE=TRUE 5
13 LVDS_B_DATA_N<1>		LVDS_B_DATA_N1_SPN	MAKE_BASE=TRUE
13 LVDS_B_DATA_N<2>		LVDS_B_DATA_N2_SPN	MAKE_BASE=TRUE 5
13 LVDS_B_DATA_P<0>		LVDS_B_DATA_P0_SPN	MAKE_BASE=TRUE
13 LVDS_B_DATA_P<1>		LVDS_B_DATA_P1_SPN	MAKE_BASE=TRUE 5
13 LVDS_B_DATA_P<2>		LVDS_B_DATA_P2_SPN	MAKE_BASE=TRUE 5 MAKE_BASE=TRUE

PCI_EXPRESS GRAPHICS ALIASES

NO-CONNECT UNUSED SDVO INTERFACE PORTS

13 PEG_D2R_N<0>		PEG_D2R_N0_SPN	
13 PEG_D2R_N<2>		PEG_D2R_N2_SPN	MAKE_BASE=TRUE
13 PEG_D2R_N<3>		PEG_D2R_N3_SPN	MAKE_BASE=TRUE
13 PEG_D2R_N<4>		PEG_D2R_N4_SPN	MAKE_BASE=TRUE
13 PEG_D2R_N<5>		PEG_D2R_N5_SPN	MAKE_BASE=TRUE
13 PEG_D2R_N<6>		PEG_D2R_N6_SPN	MAKE_BASE=TRUE
13 PEG_D2R_N<7>		PEG_D2R_N7_SPN	MAKE_BASE=TRUE
13 PEG_D2R_N<8>		PEG_D2R_N8_SPN	MAKE_BASE=TRUE
13 PEG_D2R_N<9>		PEG_D2R_N9_SPN	MAKE_BASE=TRUE
13 PEG_D2R_N<10>		PEG_D2R_N10_SPN	MAKE_BASE=TRUE
13 PEG_D2R_N<11>		PEG_D2R_N11_SPN	MAKE_BASE=TRUE
13 PEG_D2R_N<12>		PEG_D2R_N12_SPN	MAKE_BASE=TRUE
13 PEG_D2R_N<13>		PEG_D2R_N13_SPN	MAKE_BASE=TRUE
13 PEG_D2R_N<14>		PEG_D2R_N14_SPN	MAKE_BASE=TRUE
13 PEG_D2R_N<15>		PEG_D2R_N15_SPN	MAKE_BASE=TRUE
13 PEG_D2R_P<0>		PEG_D2R_P0_SPN	MAKE_BASE=TRUE
13 PEG_D2R_P<2>		PEG_D2R_P2_SPN	MAKE_BASE=TRUE
13 PEG_D2R_P<3>		PEG_D2R_P3_SPN	MAKE_BASE=TRUE
13 PEG_D2R_P<4>		PEG_D2R_P4_SPN	MAKE_BASE=TRUE
13 PEG_D2R_P<5>		PEG_D2R_P5_SPN	MAKE_BASE=TRUE
13 PEG_D2R_P<6>		PEG_D2R_P6_SPN	MAKE_BASE=TRUE
13 PEG_D2R_P<7>		PEG_D2R_P7_SPN	MAKE_BASE=TRUE
13 PEG_D2R_P<8>		PEG_D2R_P8_SPN	MAKE_BASE=TRUE
13 PEG_D2R_P<9>		PEG_D2R_P9_SPN	MAKE_BASE=TRUE
13 PEG_D2R_P<10>		PEG_D2R_P10_SPN	MAKE_BASE=TRUE
13 PEG_D2R_P<11>		PEG_D2R_P11_SPN	MAKE_BASE=TRUE
13 PEG_D2R_P<12>		PEG_D2R_P12_SPN	MAKE_BASE=TRUE
13 PEG_D2R_P<13>		PEG_D2R_P13_SPN	MAKE_BASE=TRUE
13 PEG_D2R_P<14>		PEG_D2R_P14_SPN	MAKE_BASE=TRUE
13 PEG_D2R_P<15>		PEG_D2R_P15_SPN	MAKE_BASE=TRUE
13 PEG_R2D_C_N<4>		PEG_R2D_C_N4_SPN	MAKE_BASE=TRUE
13 PEG_R2D_C_N<5>		PEG_R2D_C_N5_SPN	MAKE_BASE=TRUE
13 PEG_R2D_C_N<6>		PEG_R2D_C_N6_SPN	MAKE_BASE=TRUE
13 PEG_R2D_C_N<7>		PEG_R2D_C_N7_SPN	MAKE_BASE=TRUE
13 PEG_R2D_C_N<8>		PEG_R2D_C_N8_SPN	MAKE_BASE=TRUE
13 PEG_R2D_C_N<9>		PEG_R2D_C_N9_SPN	MAKE_BASE=TRUE
13 PEG_R2D_C_N<10>		PEG_R2D_C_N10_SPN	MAKE_BASE=TRUE
13 PEG_R2D_C_N<11>		PEG_R2D_C_N11_SPN	MAKE_BASE=TRUE
13 PEG_R2D_C_N<12>		PEG_R2D_C_N12_SPN	MAKE_BASE=TRUE
13 PEG_R2D_C_N<13>		PEG_R2D_C_N13_SPN	MAKE_BASE=TRUE
13 PEG_R2D_C_N<14>		PEG_R2D_C_N14_SPN	MAKE_BASE=TRUE
13 PEG_R2D_C_N<15>		PEG_R2D_C_N15_SPN	MAKE_BASE=TRUE
13 PEG_R2D_C_P<4>		PEG_R2D_C_P4_SPN	MAKE_BASE=TRUE
13 PEG_R2D_C_P<5>		PEG_R2D_C_P5_SPN	MAKE_BASE=TRUE
13 PEG_R2D_C_P<6>		PEG_R2D_C_P6_SPN	MAKE_BASE=TRUE
13 PEG_R2D_C_P<7>		PEG_R2D_C_P7_SPN	MAKE_BASE=TRUE
13 PEG_R2D_C_P<8>		PEG_R2D_C_P8_SPN	MAKE_BASE=TRUE
13 PEG_R2D_C_P<9>		PEG_R2D_C_P9_SPN	MAKE_BASE=TRUE
13 PEG_R2D_C_P<10>		PEG_R2D_C_P10_SPN	MAKE_BASE=TRUE
13 PEG_R2D_C_P<11>		PEG_R2D_C_P11_SPN	MAKE_BASE=TRUE
13 PEG_R2D_C_P<12>		PEG_R2D_C_P12_SPN	MAKE_BASE=TRUE
13 PEG_R2D_C_P<13>		PEG_R2D_C_P13_SPN	MAKE_BASE=TRUE
13 PEG_R2D_C_P<14>		PEG_R2D_C_P14_SPN	MAKE_BASE=TRUE
13 PEG_R2D_C_P<15>		PEG_R2D_C_P15_SPN	MAKE_BASE=TRUE

69 =GND_CHASSIS_TMDS_DOWN — GND_CHASSIS_IO1 (VOLTAGE=0V MAKE_BASE=TRUE) — I393 — 39 =GND_CHASSIS_FW_UPPER

OMIT Z0612 STDOFF-4.2OD2.15H-1.2-TH — NC 1

OMIT Z0613 STDOFF-4.2OD2.15H-1.2-TH — NC 1

NB CFG ALIASES

NO-CONNECT UNUSED CFG INTERFACE PORTS

14 NB_CFG<3>		TP_NB_CFG3	
14 NB_CFG<4>		TP_NB_CFG4	MAKE_BASE=TRUE
14 NB_CFG<6>		TP_NB_CFG6	MAKE_BASE=TRUE
14 NB_CFG<8>		TP_NB_CFG8	MAKE_BASE=TRUE
14 NB_CFG<10>		TP_NB_CFG10	MAKE_BASE=TRUE
14 NB_CFG<11>		TP_NB_CFG11	MAKE_BASE=TRUE
14 NB_CFG<12>		TP_NB_CFG12	MAKE_BASE=TRUE
14 NB_CFG<13>		TP_NB_CFG13	MAKE_BASE=TRUE
14 NB_CFG<14>		TP_NB_CFG14	MAKE_BASE=TRUE
14 NB_CFG<15>		TP_NB_CFG15	MAKE_BASE=TRUE
14 NB_CFG<17>		TP_NB_CFG17	MAKE_BASE=TRUE
			MAKE_BASE=TRUE

SATA ALIASES

NO-CONNECT UNUSED SATA INTERFACE PORTS

21 SATA_A_D2R_N		SATA_A_D2R_N_SPN	
21 SATA_A_D2R_P		SATA_A_D2R_P_SPN	MAKE_BASE=TRUE
21 SATA_A_R2D_C_N		SATA_A_R2D_C_N_SPN	MAKE_BASE=TRUE
21 SATA_A_R2D_C_P		SATA_A_R2D_C_P_SPN	MAKE_BASE=TRUE
			MAKE_BASE=TRUE

PCI_EXP ALIASES

NO-CONNECT UNUSED PCI_EXP INTERFACE PORTS

22 PCIE_C_D2R_N		PCIE_C_D2R_N_SPN	
22 PCIE_C_D2R_P		PCIE_C_D2R_P_SPN	MAKE_BASE=TRUE
22 PCIE_C_R2D_C_N		PCIE_C_R2D_C_N_SPN	MAKE_BASE=TRUE
22 PCIE_C_R2D_C_P		PCIE_C_R2D_C_P_SPN	MAKE_BASE=TRUE
22 PCIE_D_D2R_N		PCIE_D_D2R_N_SPN	MAKE_BASE=TRUE
22 PCIE_D_D2R_P		PCIE_D_D2R_P_SPN	MAKE_BASE=TRUE
22 PCIE_D_R2D_C_N		PCIE_D_R2D_C_N_SPN	MAKE_BASE=TRUE
22 PCIE_D_R2D_C_P		PCIE_D_R2D_C_P_SPN	MAKE_BASE=TRUE
22 PCIE_E_D2R_N		PCIE_E_D2R_N_SPN	MAKE_BASE=TRUE
22 PCIE_E_D2R_P		PCIE_E_D2R_P_SPN	MAKE_BASE=TRUE
22 PCIE_E_R2D_C_N		PCIE_E_R2D_C_N_SPN	MAKE_BASE=TRUE
22 PCIE_E_R2D_C_P		PCIE_E_R2D_C_P_SPN	MAKE_BASE=TRUE
22 PCIE_F_D2R_N		PCIE_F_D2R_N_SPN	MAKE_BASE=TRUE
22 PCIE_F_D2R_P		PCIE_F_D2R_P_SPN	MAKE_BASE=TRUE
22 PCIE_F_R2D_C_N		PCIE_F_R2D_C_N_SPN	MAKE_BASE=TRUE
22 PCIE_F_R2D_C_P		PCIE_F_R2D_C_P_SPN	MAKE_BASE=TRUE
			MAKE_BASE=TRUE

CLOCK ALIASES

NO-CONNECT UNUSED CLOCK INTERFACE PORTS

32 CK410_SRC1_N		CK410_SRC1_N_SPN	5
32 CK410_SRC1_P		CK410_SRC1_P_SPN	MAKE_BASE=TRUE
32 CK410_SRC3_N		CK410_SRC3_N_SPN	5 MAKE_BASE=TRUE
32 CK410_SRC3_P		CK410_SRC3_P_SPN	5 MAKE_BASE=TRUE
32 CK410_SRC7_N		CK410_SRC7_N_SPN	5 MAKE_BASE=TRUE
32 CK410_SRC7_P		CK410_SRC7_P_SPN	5 MAKE_BASE=TRUE
32 CK410_SRC_CLKREQ1_L		CK410_SRC_CLKREQ1_L_SPN	5 MAKE_BASE=TRUE
32 CK410_SRC_CLKREQ3_L		CK410_SRC_CLKREQ3_L_SPN	5 MAKE_BASE=TRUE 5 MAKE_BASE=TRUE

SB ALIASES

NO-CONNECT UNUSED CLOCK INTERFACE PORTS

23 SUS_CLK_SB		SUS_CLK_SB_SPN	MAKE_BASE=TRUE

SO-DIMM ALIASES

NO-CONNECT UNUSED ADDRESS INTERFACE PORTS

28 MEM_A_A<15>		MEM_A_A15_SPN	
28 MEM_A_A<14>		MEM_A_A14_SPN	MAKE_BASE=TRUE
29 MEM_B_A<15>		MEM_B_A15_SPN	MAKE_BASE=TRUE
29 MEM_B_A<14>		MEM_B_A14_SPN	MAKE_BASE=TRUE
			MAKE_BASE=TRUE

Ethernet ALIASES

36 ENET_CTRL12		ENET_CTRL12_SPN	
36 ENET_CTRL25		ENET_CTRL25_SPN	MAKE_BASE=TRUE
			MAKE_BASE=TRUE

FIREWIRE ALIASES

NO-CONNECT UNUSED FIREWIRE INTERFACE PORTS

38 FW_B_TPBIAS		FW_B_TPBIAS_SPN	5
38 FW_B_TPA_P		FW_B_TPA_P_SPN	MAKE_BASE=TRUE
38 FW_B_TPA_N		FW_B_TPA_N_SPN	5 MAKE_BASE=TRUE
38 FW_B_TPB_P		FW_B_TPB_P_SPN	5 MAKE_BASE=TRUE
38 FW_B_TPB_N		FW_B_TPB_N_SPN	5 MAKE_BASE=TRUE
38 FW_C_TPBIAS		FW_C_TPBIAS_SPN	5 MAKE_BASE=TRUE
38 FW_C_TPA_P		FW_C_TPA_P_SPN	5 MAKE_BASE=TRUE
38 FW_C_TPA_N		FW_C_TPA_N_SPN	5 MAKE_BASE=TRUE
38 FW_C_TPB_P		FW_C_TPB_P_SPN	5 MAKE_BASE=TRUE
38 FW_C_TPB_N		FW_C_TPB_N_SPN	5 MAKE_BASE=TRUE
			5 MAKE_BASE=TRUE
39 =FWPWR_PWRON		NC_FWPWR_PWRON	NO_TEST=TRUE MAKE_BASE=TRUE

USB PORT A = External USB2.0 Port

42 =USB2_EXTA_P	USB2_EXTA_P	USB_A_P	22
42 =USB2_EXTA_N	MAKE_BASE=TRUE USB2_EXTA_N	USB_A_N	22
42 =EXTAUSB_OC_L	MAKE_BASE=TRUE EXTAUSB_OC_L	USB_A_OC_L	22
	MAKE_BASE=TRUE		

USB PORT B = Trackpad(Geyser)

40 =USB2_GEYSER_P	USB2_GEYSER_P	USB_B_P	22
40 =USB2_GEYSER_N	MAKE_BASE=TRUE USB2_GEYSER_N	USB_B_N	22
	MAKE_BASE=TRUE		

USB PORT C = External USB2.0 Port B

42 =USB2_EXTB_P	USB2_EXTB_P	USB_C_P	22
42 =USB2_EXTB_N	MAKE_BASE=TRUE USB2_EXTB_N	USB_C_N	22
42 =EXTBUSB_OC_L	MAKE_BASE=TRUE EXTBUSB_OC_L	USB_C_OC_L	22
	MAKE_BASE=TRUE		

USB PORT D = CAMERA

67 =USB2_CAMERA_P	USB2_CAMERA_P	USB_D_P	22
67 =USB2_CAMERA_N	MAKE_BASE=TRUE USB2_CAMERA_N	USB_D_N	22
	MAKE_BASE=TRUE		

USB PORT "E" = Unused

5 TP_USBP_E		USB_E_P	22
MAKE_BASE=TRUE			
5 TP_USBN_E		USB_E_N	22
MAKE_BASE=TRUE			

USB PORT "F" = IR CONTROLLER

41 =USB2_IR_P	USB_IR_P	USB_F_P	22
41 =USB2_IR_N	MAKE_BASE=TRUE USB_IR_N	USB_F_N	22
	MAKE_BASE=TRUE		

USB PORT "G" = BLUETOOTH

44 =USB2_BT_P	USB_BT_P	USB_G_P	22
44 =USB2_BT_N	MAKE_BASE=TRUE USB_BT_N	USB_G_N	22
	MAKE_BASE=TRUE		

USB PORT "H" = PCI-E Mini Card

43 =USB2_AIRPORT_P	USB2_AIRPORT_P	USB_H_P	22
43 =USB2_AIRPORT_N	MAKE_BASE=TRUE USB2_AIRPORT_N	USB_H_N	22
	MAKE_BASE=TRUE		

ANALOG SWITCH GPIO

69 =SB_GPIO22	SB_GPIO22	TP_SB_GPIO22	22
	MAKE_BASE=TRUE		
45 14 PM_EXTTS_L<0>	DIMM_OVERTEMP_L	28 29	
MAKE_BASE=TRUE			
47 21 5 FWH_INIT_L	SMC_CPU_INIT_3_3_L	45	
MAKE_BASE=TRUE			

SIGNAL ALIAS /RESET

SYNC_MASTER=ENET — SYNC_DATE=08/19/2005

NOTICE OF PROPRIETARY PROPERTY

THE INFORMATION CONTAINED HEREIN IS THE PROPRIETARY PROPERTY OF APPLE COMPUTER, INC. THE POSSESSOR AGREES TO THE FOLLOWING

I TO MAINTAIN THE DOCUMENT IN CONFIDENCE

II NOT TO REPRODUCE OR COPY IT

III NOT TO REVEAL OR PUBLISH IN WHOLE OR PART

PART#	QTY	DESCRIPTION	REFERENCE DESIGNATOR(S)	BOM OPTION
860-0722	4	THERMAL STANDOFF	Z0603,Z0604,Z0605,Z0621	STANDOFF
860-0723	1	STANDOFF WIRELESS	Z0612	STANDOFF
860-0749	1	STANDOFF W/THRU HOLES,WIRELESS	Z0613	STANDOFF

APPLE COMPUTER INC.

SIZE	DRAWING NUMBER	REV.
D	051-7173	C
SCALE NONE	SHT 6 OF 108	

www.laptopblue.vn

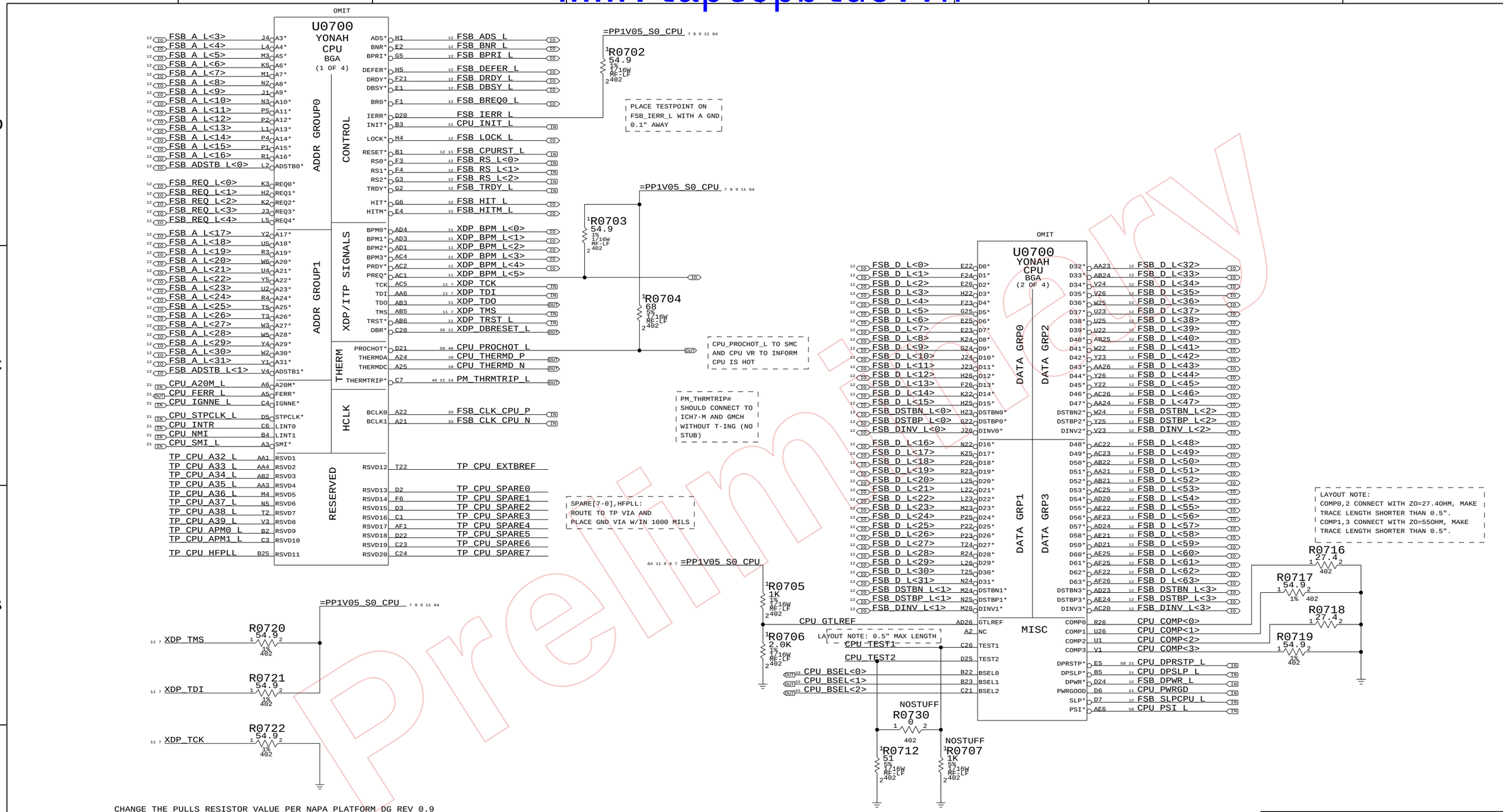

CHANGE THE PULLS RESISTOR VALUE PER NAPA PLATFORM DG REV 0.9

WE THROUGH THE ITP700FLEX CONNECTOR CONNECT TO PDB XDP BUFFER BOARD--ECM*50
SO THE TDI PULL UP THROUGH 54.9 OHM,TMS PULL UP THROUGH 54.9 OHM
TCK PULL DOWN THROUGH 54.9 OHM(FOLLOW UP XDP DESIGN REFERENCE)

Preliminary

CPU 1 OF 2-FSB

SYNC_MASTER=MASTER SYNC_DATE=05/03/2005

NOTICE OF PROPRIETARY PROPERTY

THE INFORMATION CONTAINED HEREIN IS THE PROPRIETARY PROPERTY OF APPLE COMPUTER, INC. THE POSSESSOR AGREES TO THE FOLLOWING

I TO MAINTAIN THE DOCUMENT IN CONFIDENCE
II NOT TO REPRODUCE OR COPY IT
III NOT TO REVEAL OR PUBLISH IN WHOLE OR PART

APPLE COMPUTER INC.

SIZE	DRAWING NUMBER	REV.
D	051-7173	C
SCALE NONE	SHT 7 OF 108	

www.laptopblue.vn

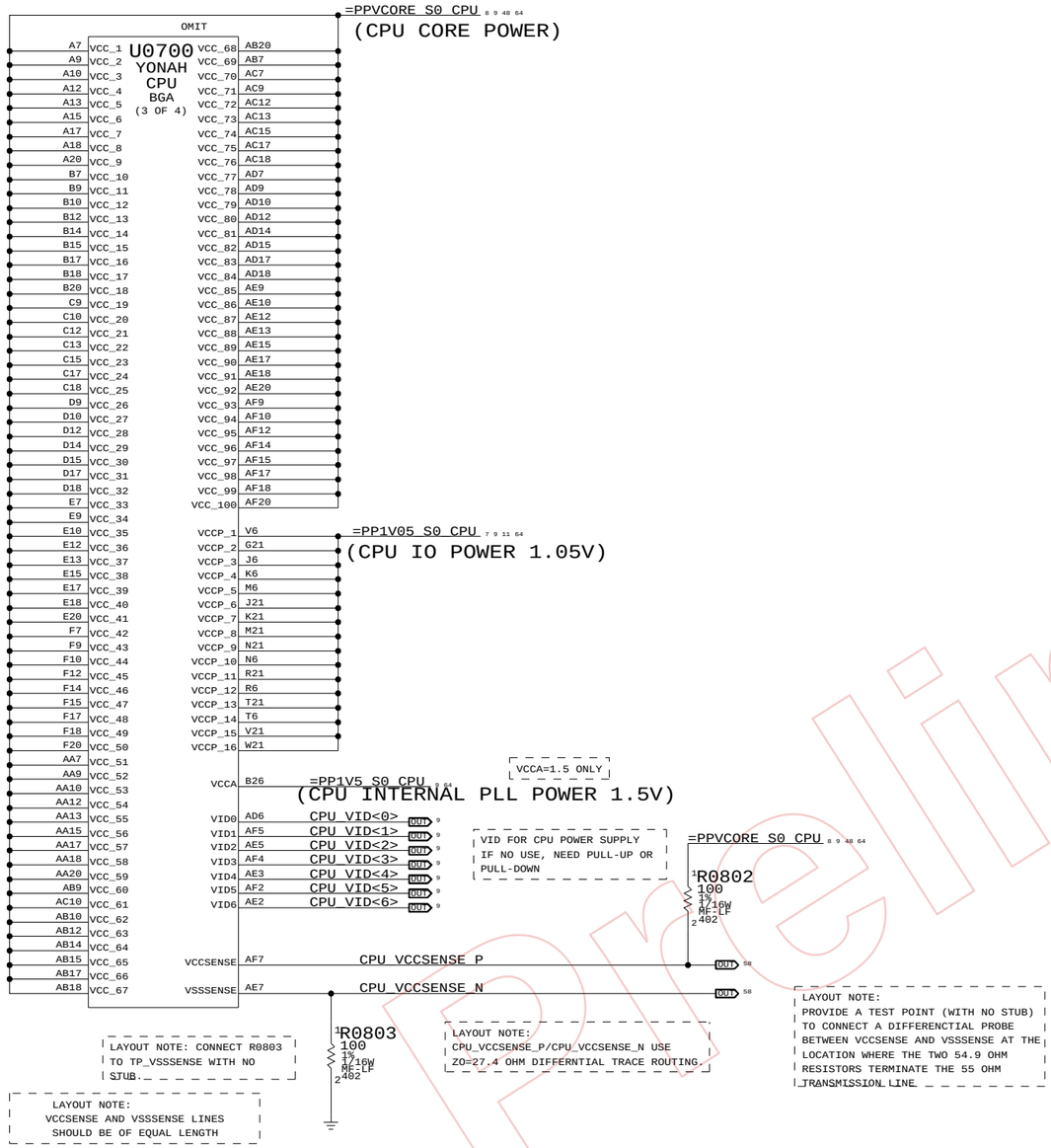

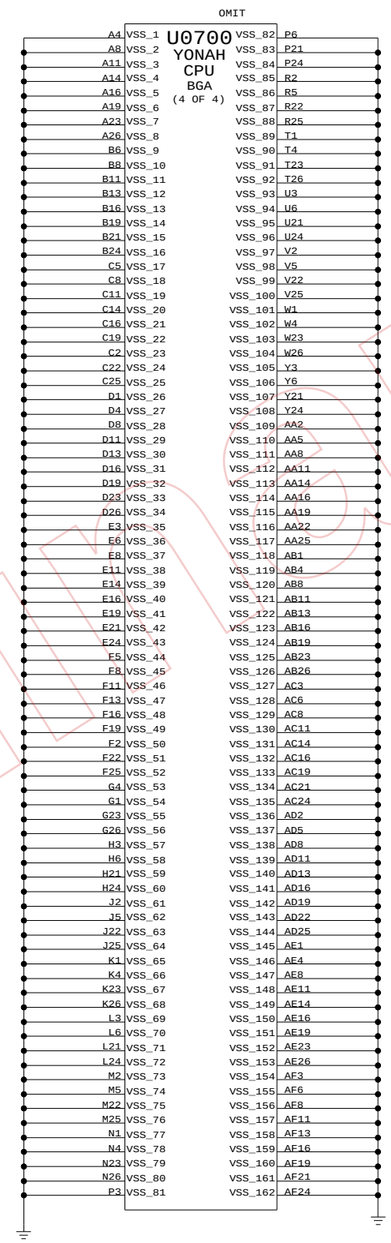

Preliminary

CPU 2 OF 2-PWR/GND

SYNC_MASTER=MASTER SYNC_DATE=05/03/2005

NOTICE OF PROPRIETARY PROPERTY

THE INFORMATION CONTAINED HEREIN IS THE PROPRIETARY PROPERTY OF APPLE COMPUTER, INC. THE POSSESSOR AGREES TO THE FOLLOWING

I TO MAINTAIN THE DOCUMENT IN CONFIDENCE
II NOT TO REPRODUCE OR COPY IT
III NOT TO REVEAL OR PUBLISH IN WHOLE OR PART

APPLE COMPUTER INC.

SIZE	DRAWING NUMBER	REV.
D	051-7173	C
SCALE NONE	SHT 8 OF 108	

www.laptopblue.vn

VCCA DECOUPLING
(CPU INTERNAL PLL POWER 1.5V)

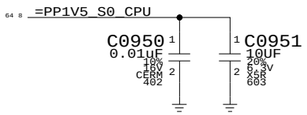

PART NUMBER	ALTERNATE FOR PART NUMBER	BOM OPTION	REF DES	COMMENTS:
138S0603	138S0602	?	ALL	USE SAMSUNG AND MURATA ONLY
138S0606	138S0602	?	ALL	USE TAIYO

CPU CORE VID<> SETTINGS

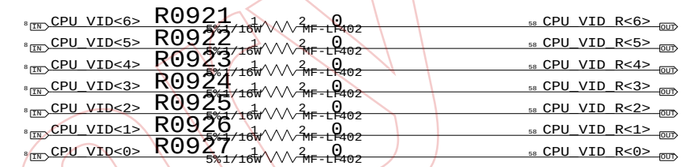

R0921~R0927 FOR CPU VOLTAGE MANUAL SETTING

VCCP CORE DECOUPLING
(CPU IO POWER 1.05V)

THIS 470UF FOR CPU,GMCH FSB BUS 1.05V

PLACE NEAR THE NORTH BRIDGE
ON BOTTOM SIDE

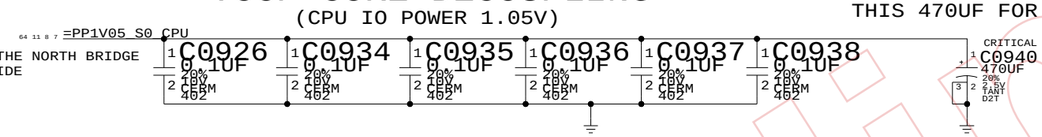

VCC CORE DECOUPLING
(CPU CORE POWER)

PLACE NEAR THE CPU
ON BOTTOM SIDE
(10 PCS ON NORTH SIDE
10 PCS ON SOUTH SIDE)

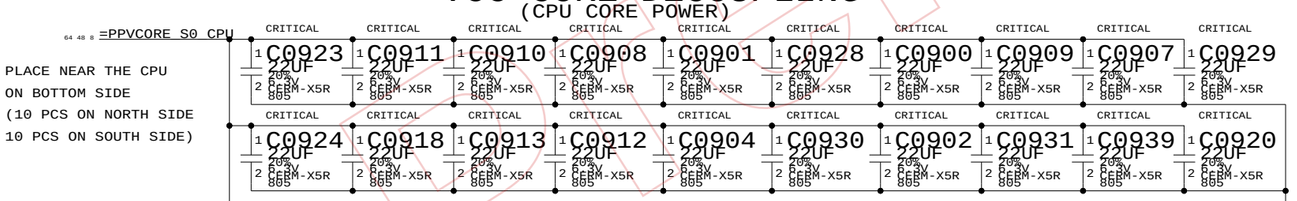

IF WE USE LOW ESL CAP,THEN WE CAN USE 20 PCS 22UF CAP

(2 PCS ON NORTH SIDE
2 PCS ON SOUTH SIDE)

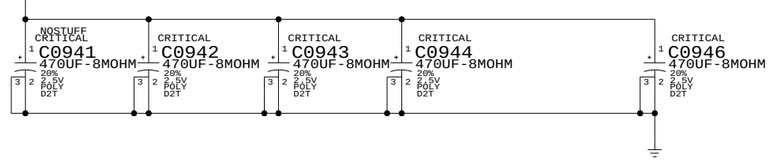

		MIN	TYP	MAX
DUAL CORE SV CPU	VCCHFM	1.1625		1.30
	VCCLFM	TBD		TBD
SINGLE CORE SV CPU	VCCHFM	1.1625		1.30
	VCCLFM		TBD	
DUAL CORE LV CPU	VCCHFM	1.0		1.1625
	VCCLFM		TBD	
ULV CPU	VCCHFM	TBD		TBD
	VCCLFM		TBD	

UNIT: V

ALL PROCESSOR DEFAULT VCORE FOR INITIAL POWER UP IS 1.2V
TWO PROCESSORS AT THE SAME FREQUENCY MAY HAVE DIFFERENT SETTING WITH THE VID RANGE(VCORE VOLTAGE)!
REFER TO YONAH PROCESSOR EMTS REV 1.0
VCCHFM: VCORE AT HIGHEST FREQUENCY MODE
VCCLFM: VCORE AT LOWEST FREQUENCY MODE

CPU DECAPS & VID<>

NOTICE OF PROPRIETARY PROPERTY
THE INFORMATION CONTAINED HEREIN IS THE PROPRIETARY PROPERTY OF APPLE COMPUTER, INC. THE POSSESSOR AGREES TO THE FOLLOWING
I TO MAINTAIN THE DOCUMENT IN CONFIDENCE
II NOT TO REPRODUCE OR COPY IT
III NOT TO REVEAL OR PUBLISH IN WHOLE OR PART

APPLE COMPUTER INC.

SIZE	DRAWING NUMBER	REV.
D	051-7173	C
SCALE NONE	SHT 9 OF 108	

Preliminary

www.laptopblue.vn

CPU ZONE THERMAL SENSOR

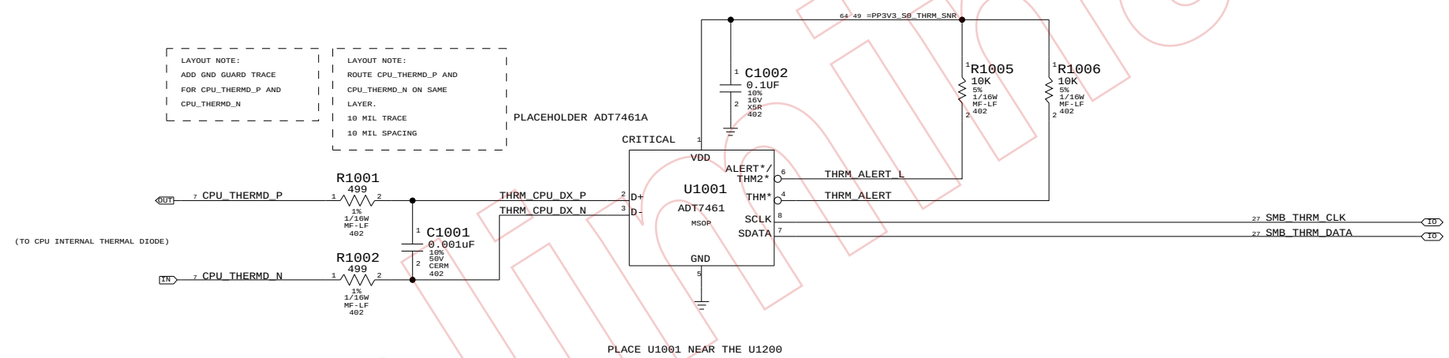

Preliminary

CPU MISC1-TEMP SENSOR

SYNC_MASTER=ENET SYNC_DATE=08/19/2005

NOTICE OF PROPRIETARY PROPERTY

THE INFORMATION CONTAINED HEREIN IS THE PROPRIETARY PROPERTY OF APPLE COMPUTER, INC. THE POSSESSOR AGREES TO THE FOLLOWING

I TO MAINTAIN THE DOCUMENT IN CONFIDENCE

II NOT TO REPRODUCE OR COPY IT

III NOT TO REVEAL OR PUBLISH IN WHOLE OR PART

APPLE COMPUTER INC.

SIZE	DRAWING NUMBER	REV.
D	051-7173	C

SCALE NONE | SHT 10 OF 108

www.laptopblue.vn

CPU ITP700FLEX DEBUG SUPPORT

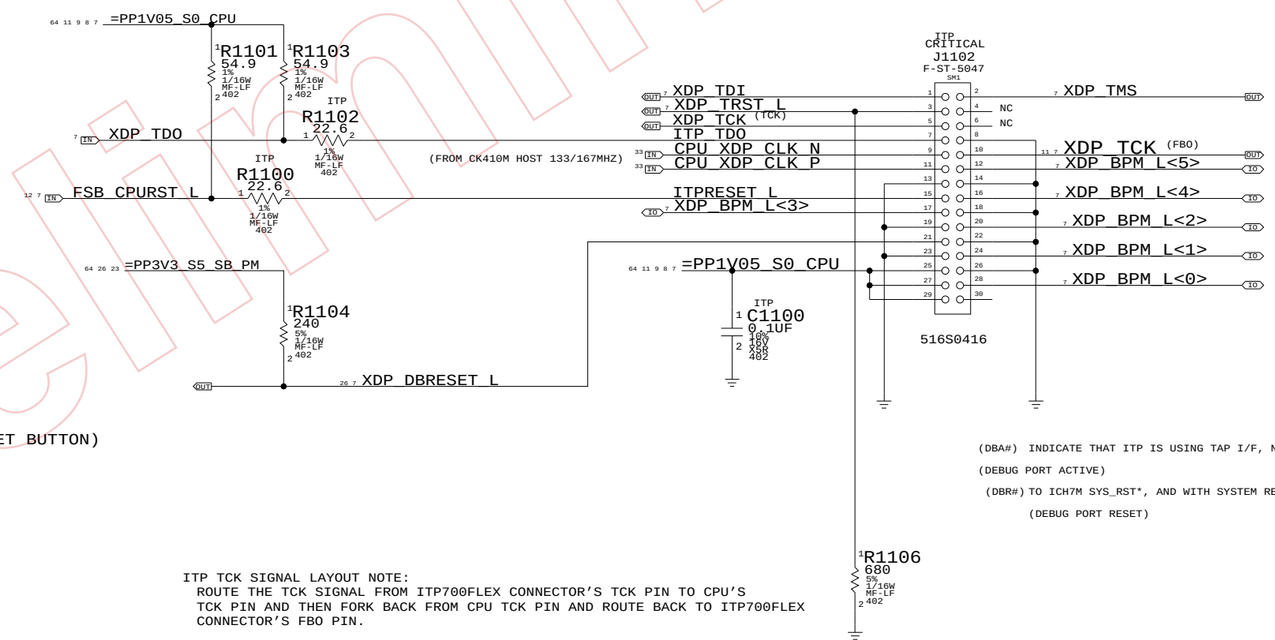

(AND WITH RESET BUTTON)

(DBA#) INDICATE THAT ITP IS USING TAP I/F, NC IN 945GM CHIPSET SYSTEM.

(DEBUG PORT ACTIVE)

(DBR#) TO ICH7M SYS_RST*, AND WITH SYSTEM RESET LOGIC

(DEBUG PORT RESET)

ITP TCK SIGNAL LAYOUT NOTE:
ROUTE THE TCK SIGNAL FROM ITP700FLEX CONNECTOR'S TCK PIN TO CPU'S TCK PIN AND THEN FORK BACK FROM CPU TCK PIN AND ROUTE BACK TO ITP700FLEX CONNECTOR'S FBO PIN.

Preliminary

CPU ITP700FLEX DEBUG

SYNC_MASTER=MASTER SYNC_DATE=5/23/05

NOTICE OF PROPRIETARY PROPERTY

THE INFORMATION CONTAINED HEREIN IS THE PROPRIETARY PROPERTY OF APPLE COMPUTER, INC. THE POSSESSOR AGREES TO THE FOLLOWING

I TO MAINTAIN THE DOCUMENT IN CONFIDENCE

II NOT TO REPRODUCE OR COPY IT

III NOT TO REVEAL OR PUBLISH IN WHOLE OR PART

APPLE COMPUTER INC.

SIZE	DRAWING NUMBER	REV.
D	051-7173	C
SCALE NONE	SHT 11 OF 108	

www.laptopblue.vn

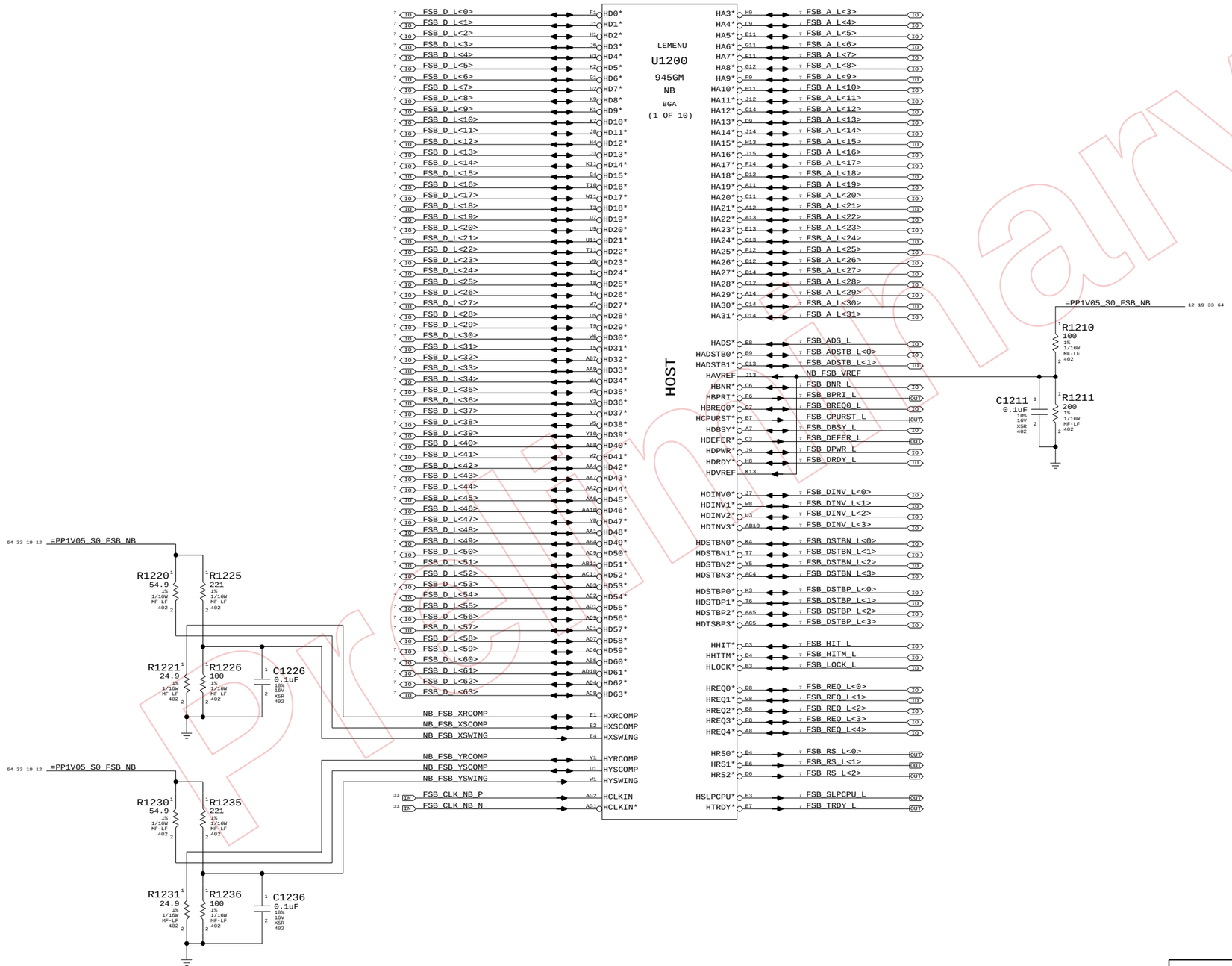

Preliminary

NB CPU Interface

SYNC_MASTER=NB SYNC_DATE=07/25/2005

NOTICE OF PROPRIETARY PROPERTY

THE INFORMATION CONTAINED HEREIN IS THE PROPRIETARY PROPERTY OF APPLE COMPUTER, INC. THE POSSESSOR AGREES TO THE FOLLOWING

I TO MAINTAIN THE DOCUMENT IN CONFIDENCE

II NOT TO REPRODUCE OR COPY IT

III NOT TO REVEAL OR PUBLISH IN WHOLE OR PART

APPLE COMPUTER INC.

SIZE	DRAWING NUMBER	REV.
D	051-7173	C
SCALE NONE	SHT 12 OF 108	

www.laptopblue.vn

LVDS Disable

Can leave all signals NC if LVDS is not implemented
Tie VCC_TXLVDS and VCCA_LVDS to GND. If SDVO is used
VCCD_LVDS must remain powered with proper decoupling.
Otherwise, tie VCCD_LVDS to GND also.

TV-Out Signal Usage:

Composite: DACA only
S-Video: DACB & DACC only
Component: DACA, DACB & DACC

Unused DAC outputs must remain powered, but can omit filtering components. Unused DAC outputs should connect to GND through 75-ohm resistors.

TV-Out Disable

Tie DACx_OUT, IRTNx, and IREF to 1.5V power rail.
Tie VCCD_TVDAC, VCCD_QTVDAC, VCCA_TVDACx, and
VCCA_TVBG to 1.5V power rail. Tie VSSA_TVBG to GND.

CRT Disable

Tie R/R#/G/G#/B/B# and IREF to VCC Core rail, tie
HSYNC and VSYNC to GND. Tie VCCA_CRTDAC to VCC Core
rail, and tie VSSA_CRTDAC and VCC_SYNC to GND.

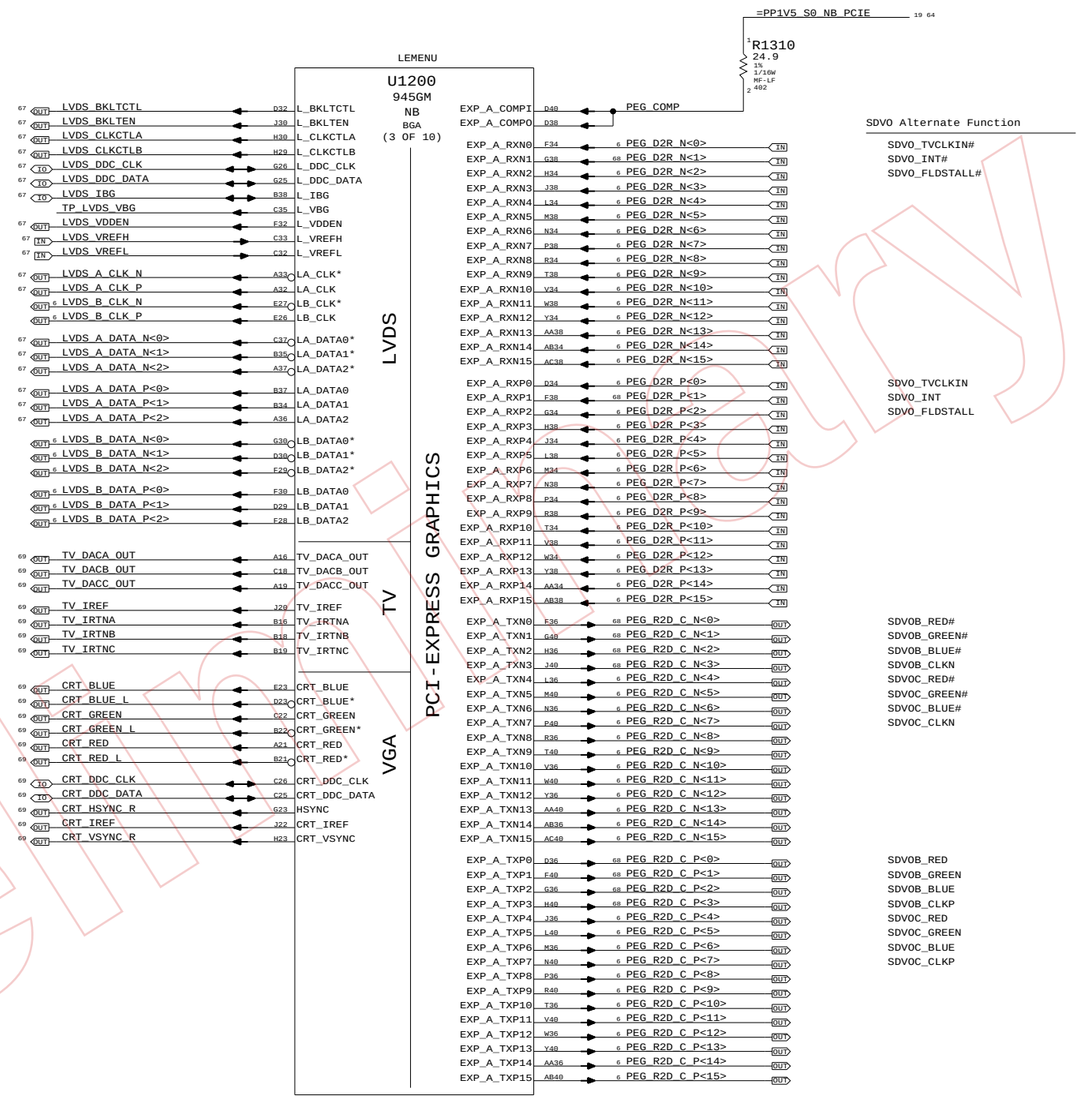

Preliminary

NB PEG / Video Interfaces

SYNC_MASTER=NB SYNC_DATE=07/25/2005

NOTICE OF PROPRIETARY PROPERTY

THE INFORMATION CONTAINED HEREIN IS THE PROPRIETARY PROPERTY OF APPLE COMPUTER, INC. THE POSSESSOR AGREES TO THE FOLLOWING

I TO MAINTAIN THE DOCUMENT IN CONFIDENCE
II NOT TO REPRODUCE OR COPY IT
III NOT TO REVEAL OR PUBLISH IN WHOLE OR PART

APPLE COMPUTER INC.

SIZE	DRAWING NUMBER	REV.
D	051-7173	C
SCALE NONE	SHT 13 OF 108	

www.laptopblue.vn

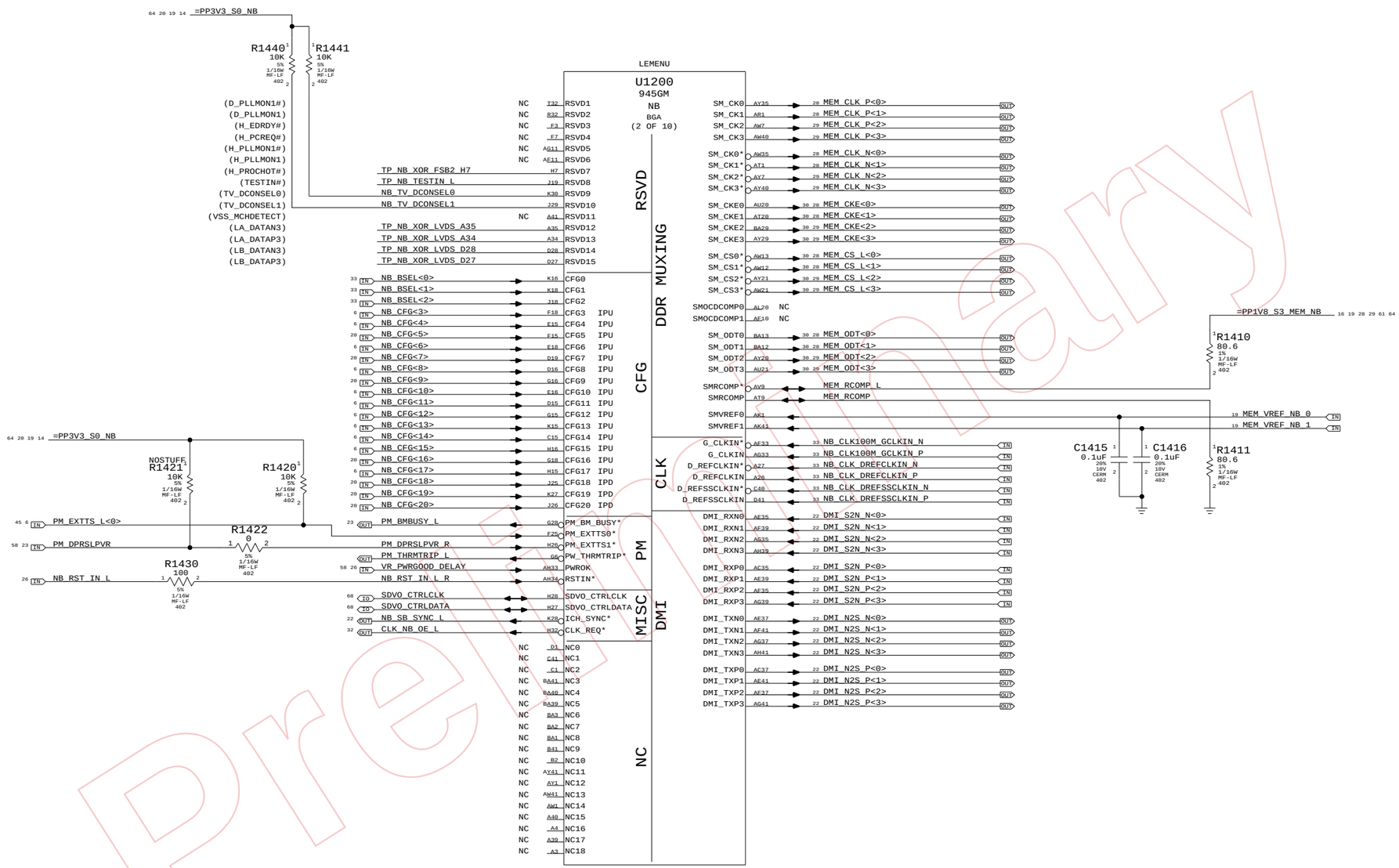

Preliminary

NB Misc Interfaces

SYNC_MASTER=NB SYNC_DATE=08/15/2005

NOTICE OF PROPRIETARY PROPERTY

THE INFORMATION CONTAINED HEREIN IS THE PROPRIETARY PROPERTY OF APPLE COMPUTER, INC. THE POSSESSOR AGREES TO THE FOLLOWING

I TO MAINTAIN THE DOCUMENT IN CONFIDENCE

II NOT TO REPRODUCE OR COPY IT

III NOT TO REVEAL OR PUBLISH IN WHOLE OR PART

APPLE COMPUTER INC.

SIZE	DRAWING NUMBER	REV.
D	051-7173	C
SCALE NONE	SHT 14 OF 108	

www.laptopblue.vn

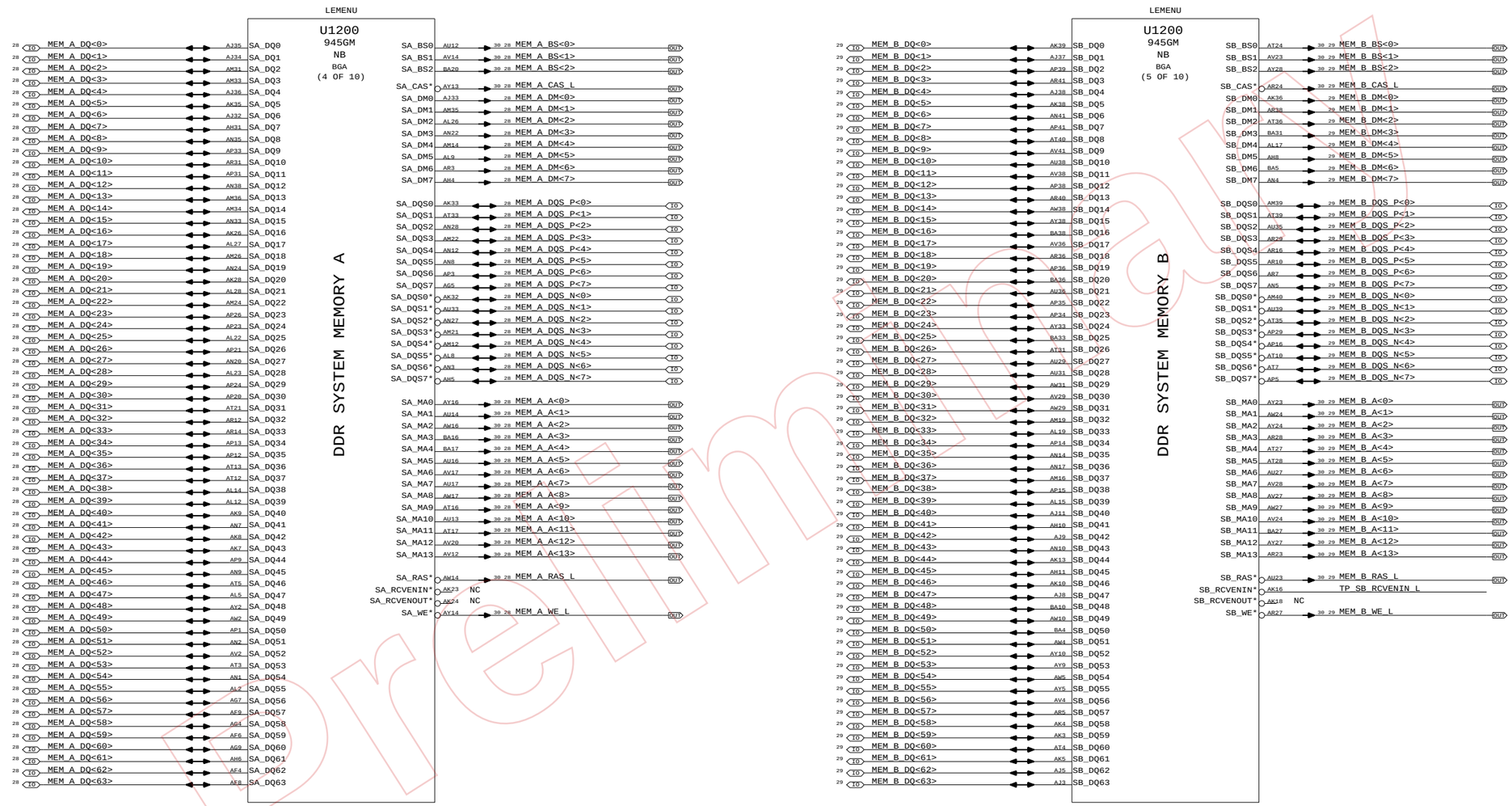

NB DDR2 Interfaces

SYNC_MASTER=NB SYNC_DATE=07/25/2005

NOTICE OF PROPRIETARY PROPERTY

THE INFORMATION CONTAINED HEREIN IS THE PROPRIETARY PROPERTY OF APPLE COMPUTER, INC. THE POSSESSOR AGREES TO THE FOLLOWING

I TO MAINTAIN THE DOCUMENT IN CONFIDENCE

II NOT TO REPRODUCE OR COPY IT

III NOT TO REVEAL OR PUBLISH IN WHOLE OR PART

APPLE COMPUTER INC.

SIZE	DRAWING NUMBER	REV.
D	051-7173	C
SCALE NONE	SHT 15 OF 108	

www.laptopblue.vn

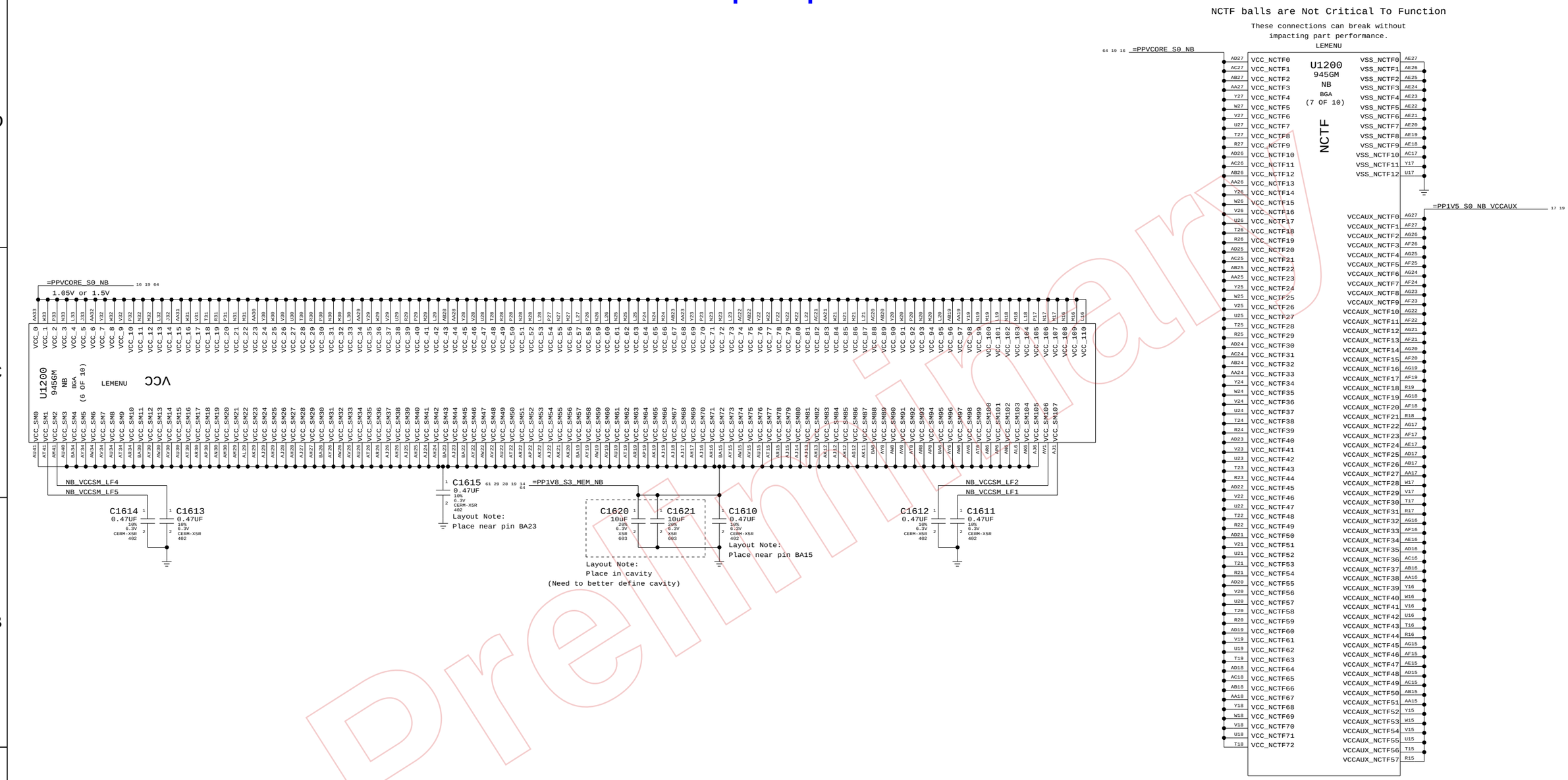

Preliminary

NB Power 1

SYNC_MASTER=NB SYNC_DATE=07/25/2005

NOTICE OF PROPRIETARY PROPERTY

THE INFORMATION CONTAINED HEREIN IS THE PROPRIETARY PROPERTY OF APPLE COMPUTER, INC. THE POSSESSOR AGREES TO THE FOLLOWING

I TO MAINTAIN THE DOCUMENT IN CONFIDENCE
II NOT TO REPRODUCE OR COPY IT
III NOT TO REVEAL OR PUBLISH IN WHOLE OR PART

APPLE COMPUTER INC.

SIZE	DRAWING NUMBER	REV.
D	051-7173	C
SCALE NONE	SHT 16 OF 108	

www.laptopblue.vn

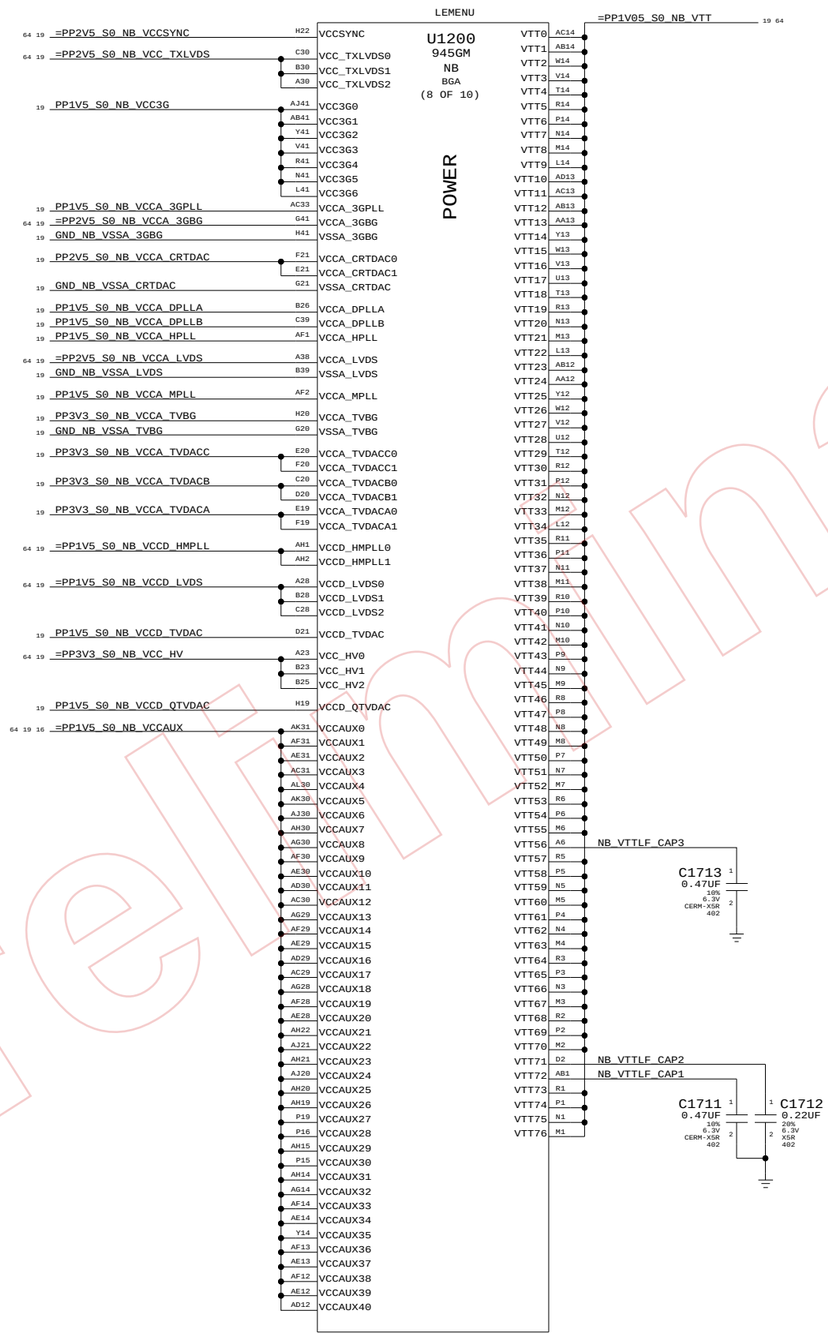

Preliminary

NB Power 2

SYNC_MASTER=NB SYNC_DATE=07/25/2005

NOTICE OF PROPRIETARY PROPERTY

THE INFORMATION CONTAINED HEREIN IS THE PROPRIETARY PROPERTY OF APPLE COMPUTER, INC. THE POSSESSOR AGREES TO THE FOLLOWING

I TO MAINTAIN THE DOCUMENT IN CONFIDENCE

II NOT TO REPRODUCE OR COPY IT

III NOT TO REVEAL OR PUBLISH IN WHOLE OR PART

APPLE COMPUTER INC.

SIZE	DRAWING NUMBER	REV.
D	051-7173	C
SCALE NONE	SHT 17 OF 108	

www.laptopblue.vn

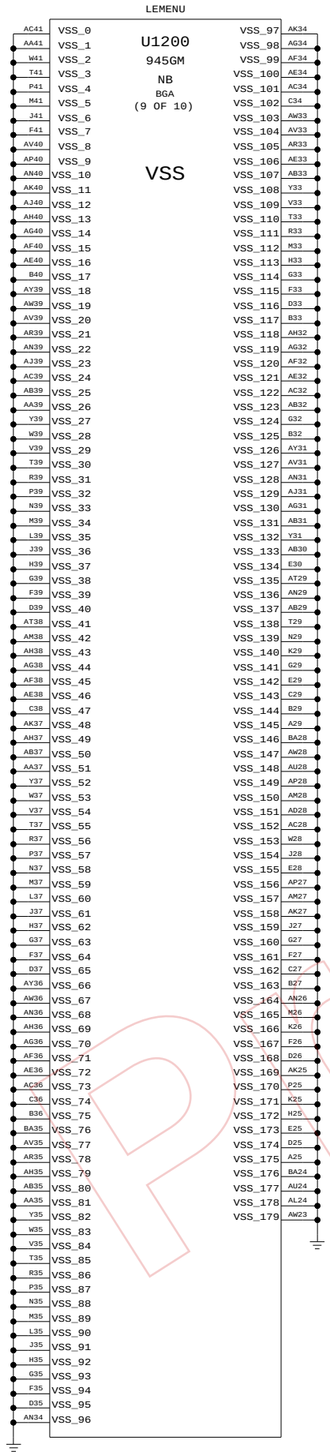

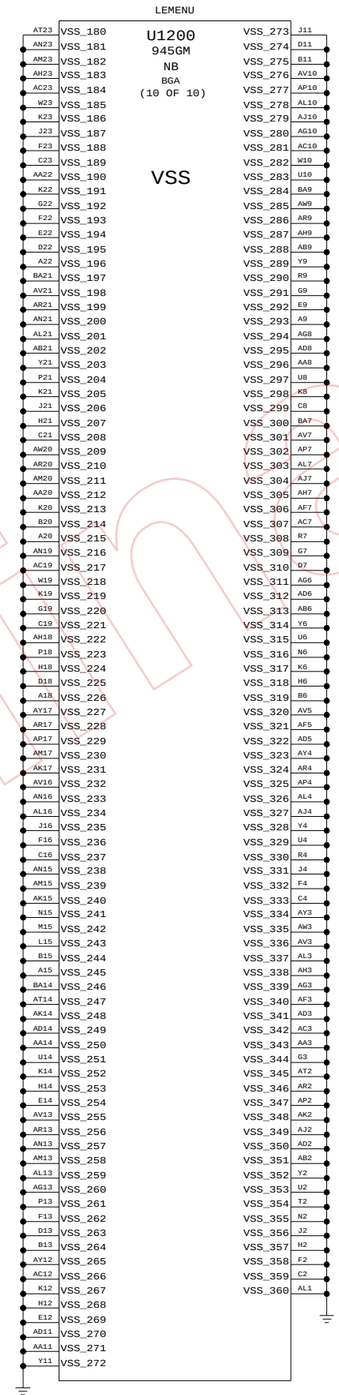

Preliminary

NB Grounds

SYNC_MASTER=NB SYNC_DATE=07/25/2005

NOTICE OF PROPRIETARY PROPERTY

THE INFORMATION CONTAINED HEREIN IS THE PROPRIETARY PROPERTY OF APPLE COMPUTER, INC. THE POSSESSOR AGREES TO THE FOLLOWING

I TO MAINTAIN THE DOCUMENT IN CONFIDENCE

II NOT TO REPRODUCE OR COPY IT

III NOT TO REVEAL OR PUBLISH IN WHOLE OR PART

APPLE COMPUTER INC.

SIZE	DRAWING NUMBER	REV.
D	051-7173	C

SCALE	SHT	OF
NONE	18	108

www.laptopblue.vn

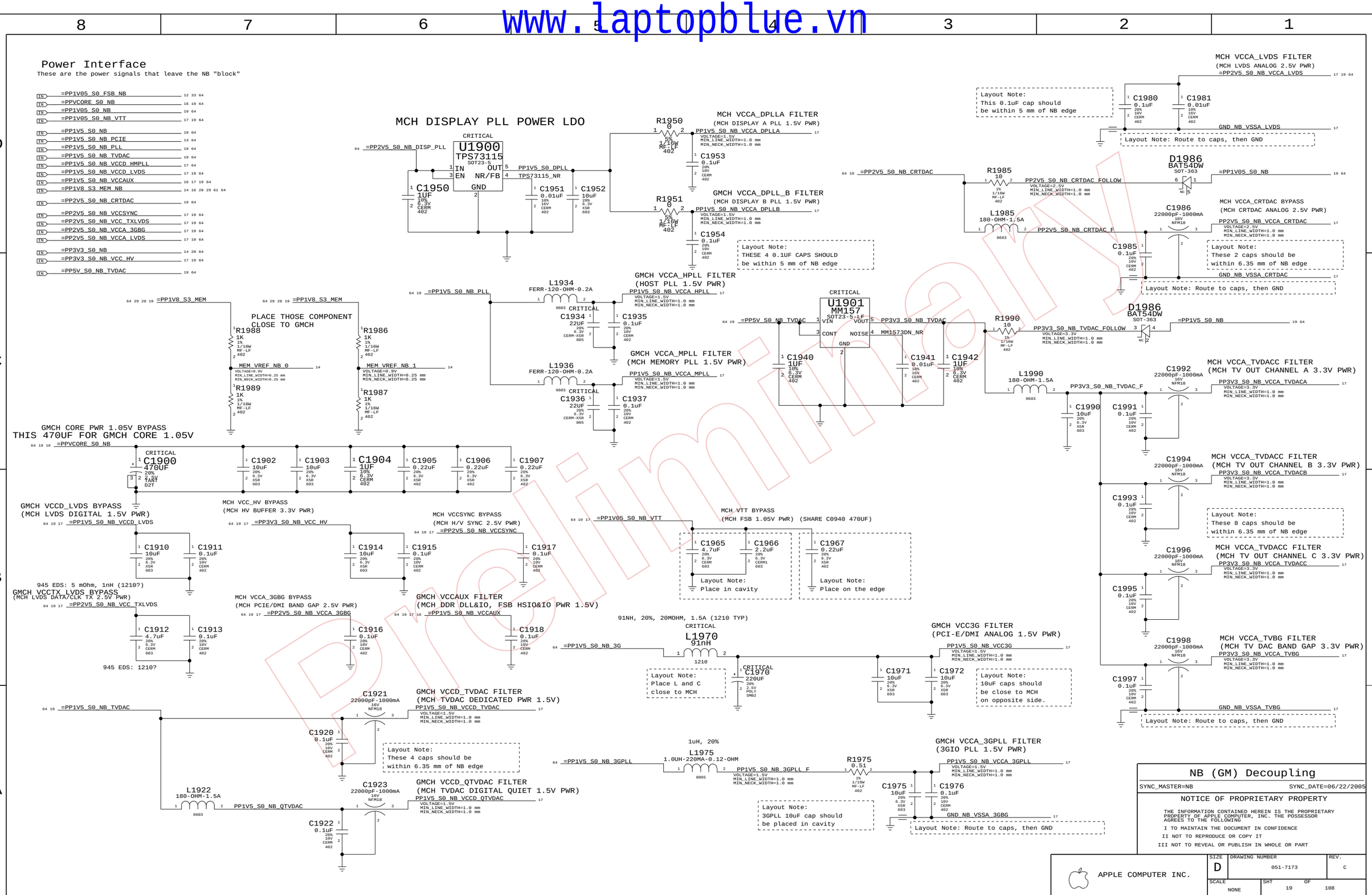

www.laptopblue.vn

NB_CFG<3>	RESERVED

NB_CFG<4>	RESERVED

14 NB_CFG<5>
Internal pull-up

NB_CFG<5> DMI x2 Select	High = DMIx4 Low = DMIx2

NBCFG_DMI_X2
R2075
2.2K
5%
1/16W
MF-LF
402

PROBABLY NOT NEEDED

NB_CFG<6>	RESERVED

14 NB_CFG<7>
Internal pull-up

NB_CFG<7> CPU Strap	High = Mobile CPU Low = RESERVED

NO STUFF
R2077
2.2K
5%
1/16W
MF-LF
402

NB_CFG<8>	RESERVED

14 NB_CFG<9>
Internal pull-up

NB_CFG<9> PCIE Graphics Lane Reversal	High = Normal Low = Reversed

NBCFG_PEG_REVERSE
R2079
2.2K
5%
1/16W
MF-LF
402

NB_CFG<10>	RESERVED

NB_CFG<11>	RESERVED

Internal pull-ups

NB_CFG<13:12>	00 = Partial Clock Gating Disable 01 = XOR Mode Enabled 10 = All-Z Mode Enabled 11 = Normal Operation

NB_CFG<14>	RESERVED

NB_CFG<15>	RESERVED

14 NB_CFG<16>
Internal pull-up

NB_CFG<16> FSB Dynamic ODT	High = Enabled Low = Disabled

NBCFG_DYN_ODT_DISABLE
R2085
2.2K
5%
1/16W
MF-LF
402

NB_CFG<17>	RESERVED

=PP3V3_S0_NB 14 19 20 64
NBCFG_VCC_1V5

NB_CFG<18> VCC Select	High = 1.5V Low = 1.05V

R2058
2.2K
5%
1/16W
MF-LF
402

14 NB_CFG<18>
Internal pull-down

=PP3V3_S0_NB 14 19 20 64
NBCFG_DMI_REVERSE

NB_CFG<19> DMI Lane Reversal	High = Reversed Low = Normal

R2059
2.2K
5%
1/16W
MF-LF
402

14 NB_CFG<19>
Internal pull-down

945 External Design Spec says reserved

=PP3V3_S0_NB 14 19 20 64
NBCFG_SDVO_AND_PCIE

NB_CFG<20> PCIe Backward Interop. Mode	High = Both active Low = Only SDVO or PCIe x1

R2060
2.2K
5%
1/16W
MF-LF
402

14 NB_CFG<20>
Internal pull-down

PROBABLY NOT NEEDED

Preliminary

NB Config Straps

SYNC_MASTER=NB SYNC_DATE=06/28/2005

NOTICE OF PROPRIETARY PROPERTY

THE INFORMATION CONTAINED HEREIN IS THE PROPRIETARY PROPERTY OF APPLE COMPUTER, INC. THE POSSESSOR AGREES TO THE FOLLOWING

I TO MAINTAIN THE DOCUMENT IN CONFIDENCE
II NOT TO REPRODUCE OR COPY IT
III NOT TO REVEAL OR PUBLISH IN WHOLE OR PART

APPLE COMPUTER INC.

SIZE	DRAWING NUMBER	REV.
D	051-7173	C
SCALE NONE	SHT 20 OF 108	

www.laptopblue.vn

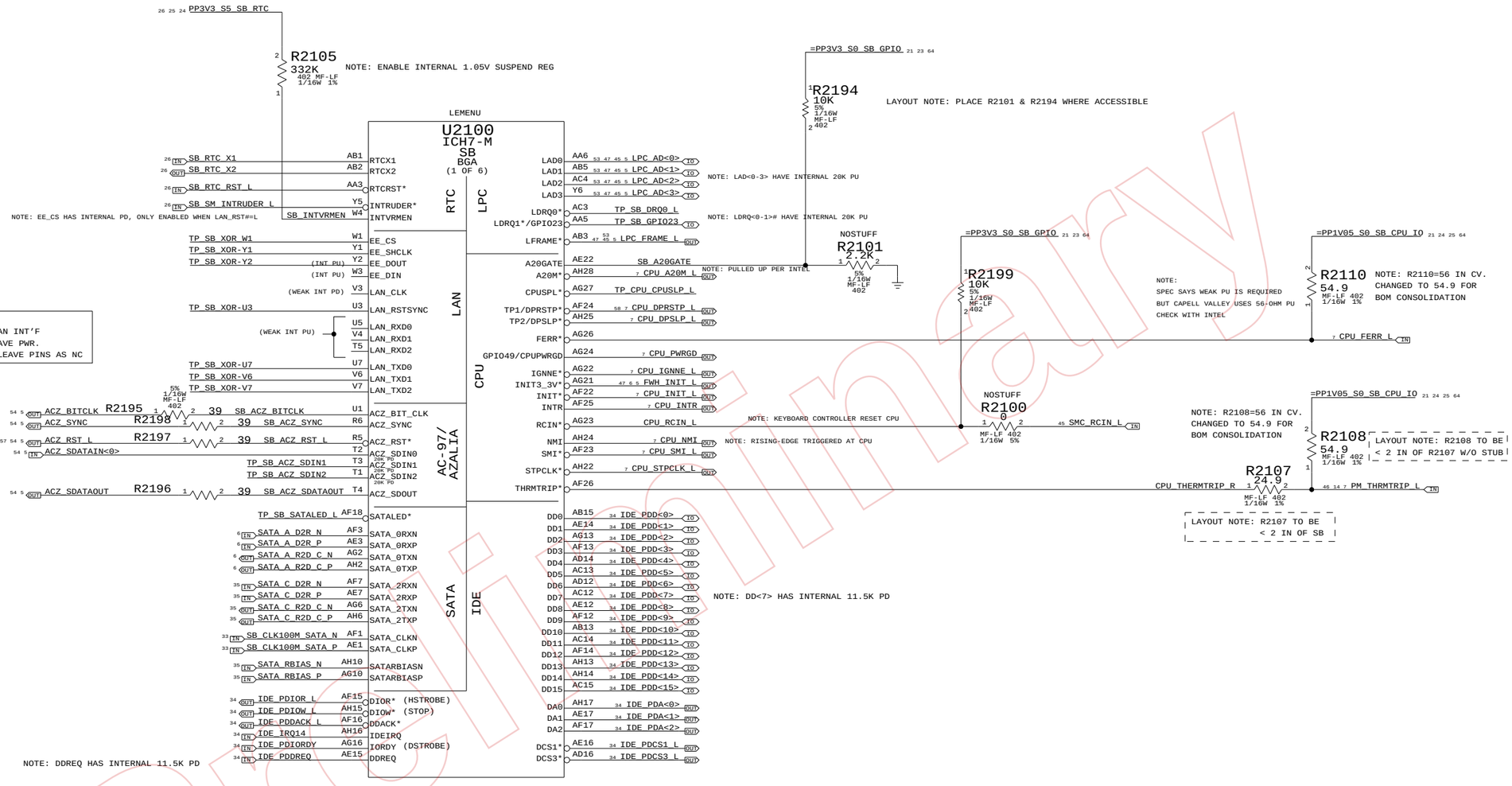

	AC '07	INTEL HIGH DEFINITION AUDIO
ACZ_BIT_CLK	INTERNAL 20K PD ENABLED WHEN - LSO BIT IN AC'97 GLOBAL CONTROL REG = 1; OR - BOTH FUNCTION 2 & 3 OF DEVICE 30 ARE DISABLED	INTERNAL 20K PD ONLY ENABLED IN S3COLD
ACZ_RST#		NONE
ACZ_SDIN[0-2]	INTERNAL 20K PD	INTERNAL 20K PD
ACZ_SDOUT	INTERNAL 20K PD ENABLED DURING RESET AND WHEN - LSO BIT IN AC'97 GLOBAL CONTROL REG = 1; OR - BOTH FUNCTION 2 & 3 OF DEVICE 30 ARE DISABLED	INTERNAL 20K PD ENABLED WHEN - LSO BIT IN AC'97 GLOBAL CONTROL REG = 1; OR - BOTH FUNCTION 2 & 3 OF DEVICE 30 ARE DISABLED
ACZ_SYNC		INTERNAL 20K PD

SB: 1 OF 4

NOTICE OF PROPRIETARY PROPERTY

THE INFORMATION CONTAINED HEREIN IS THE PROPRIETARY PROPERTY OF APPLE COMPUTER, INC. THE POSSESSOR AGREES TO THE FOLLOWING

I TO MAINTAIN THE DOCUMENT IN CONFIDENCE

II NOT TO REPRODUCE OR COPY IT

III NOT TO REVEAL OR PUBLISH IN WHOLE OR PART

APPLE COMPUTER INC.

SIZE	DRAWING NUMBER	REV.
D	051-7173	C
SCALE NONE	SHT 21 OF 108	

www.laptopblue.vn

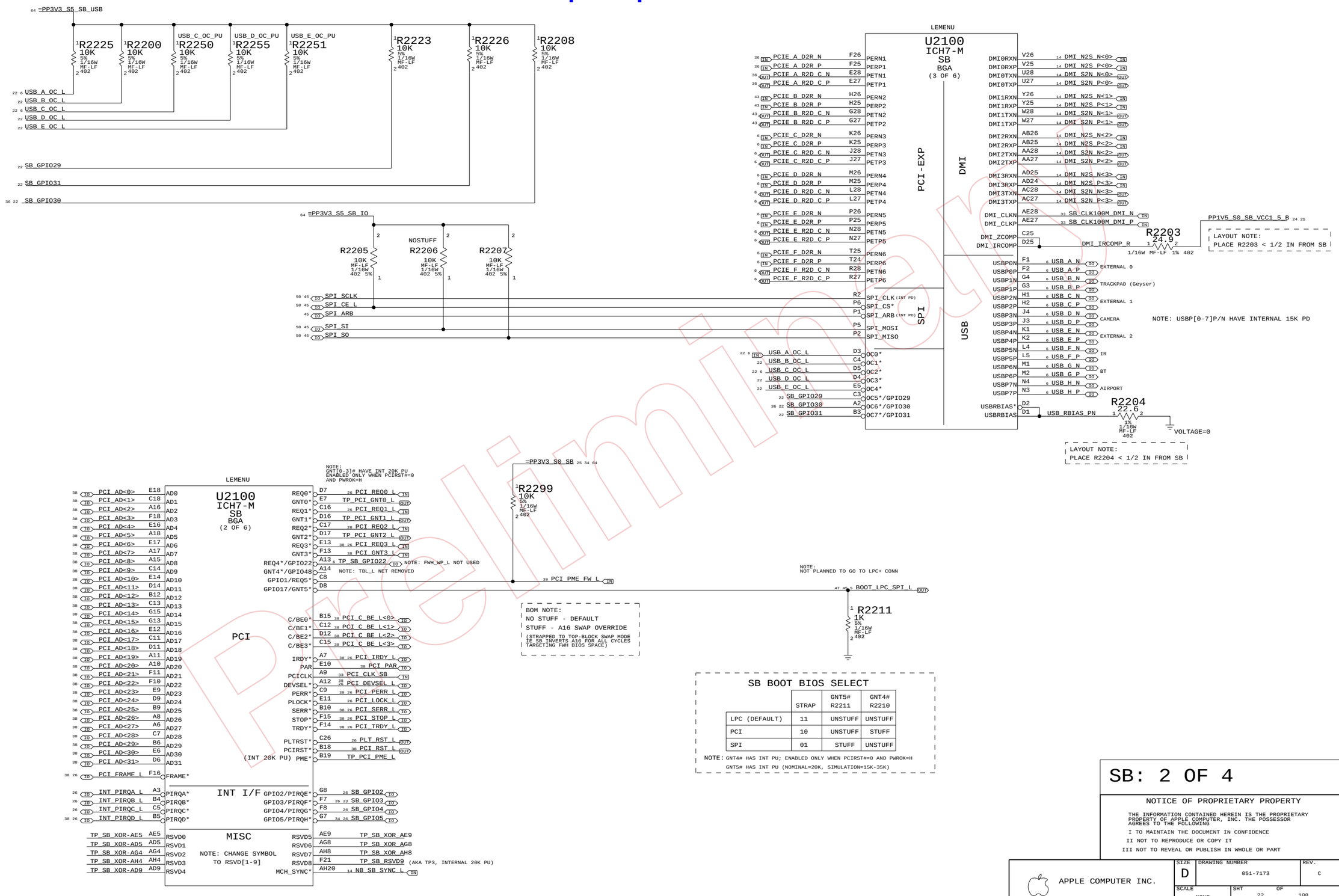

SB: 2 OF 4

NOTICE OF PROPRIETARY PROPERTY

THE INFORMATION CONTAINED HEREIN IS THE PROPRIETARY PROPERTY OF APPLE COMPUTER, INC. THE POSSESSOR AGREES TO THE FOLLOWING

I TO MAINTAIN THE DOCUMENT IN CONFIDENCE
II NOT TO REPRODUCE OR COPY IT
III NOT TO REVEAL OR PUBLISH IN WHOLE OR PART

APPLE COMPUTER INC.

SIZE	DRAWING NUMBER	REV.
D	051-7173	C
SCALE NONE	SHT 22 OF 108	

www.laptopblue.vn

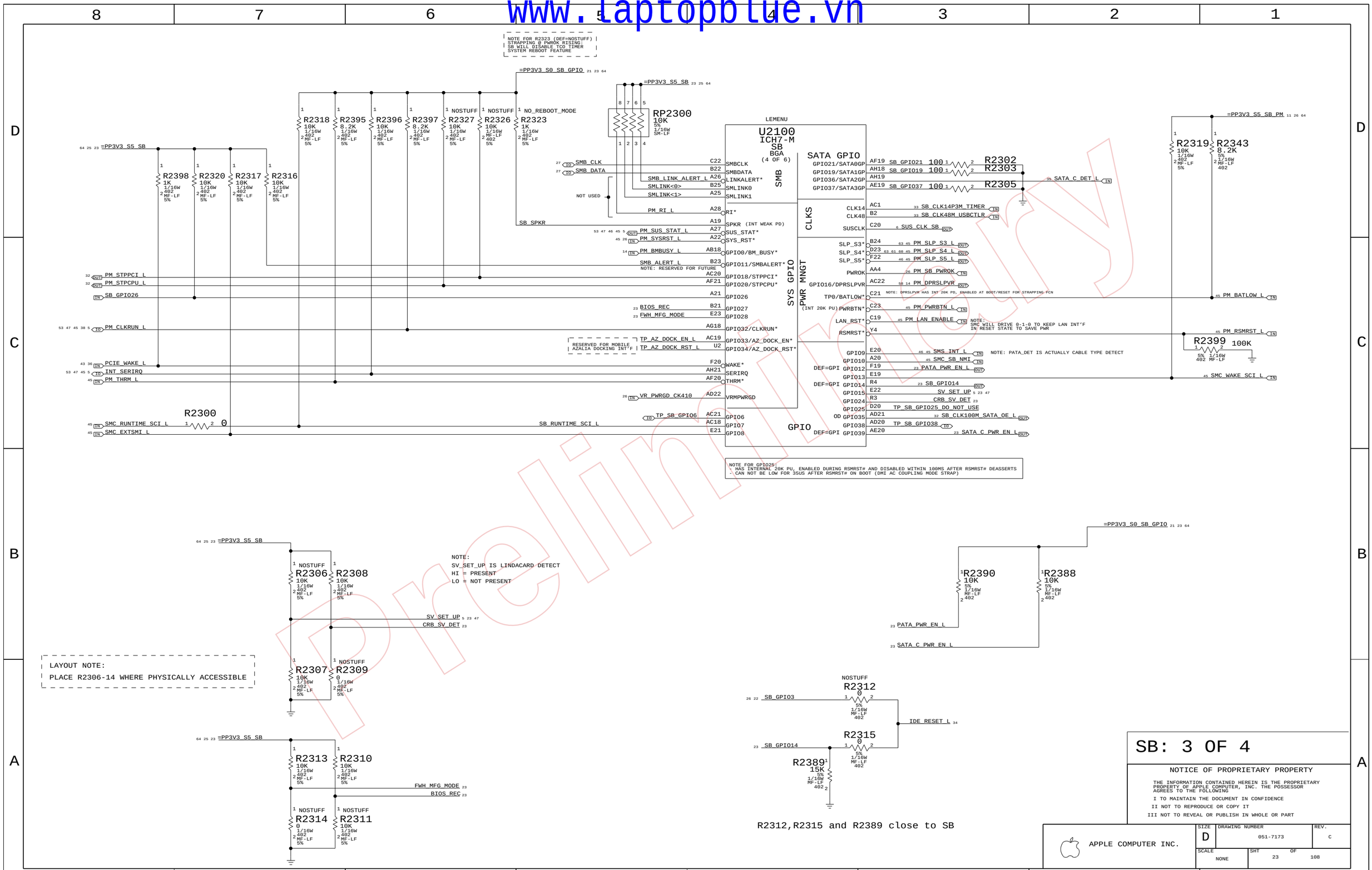

SB: 3 OF 4

NOTICE OF PROPRIETARY PROPERTY

THE INFORMATION CONTAINED HEREIN IS THE PROPRIETARY PROPERTY OF APPLE COMPUTER, INC. THE POSSESSOR AGREES TO THE FOLLOWING

I TO MAINTAIN THE DOCUMENT IN CONFIDENCE

II NOT TO REPRODUCE OR COPY IT

III NOT TO REVEAL OR PUBLISH IN WHOLE OR PART

APPLE COMPUTER INC.

SIZE	DRAWING NUMBER	REV.
D	051-7173	C
SCALE NONE	SHT 23 OF 108	

www.laptopblue.vn

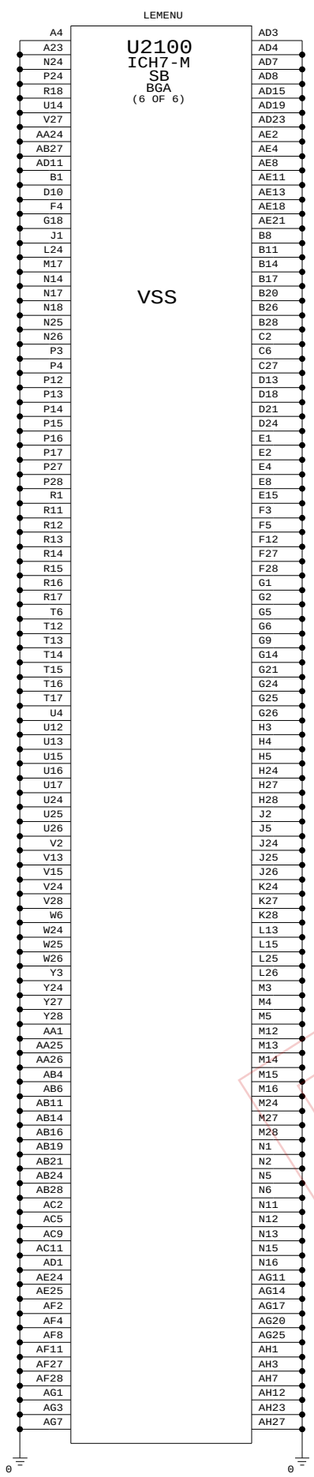

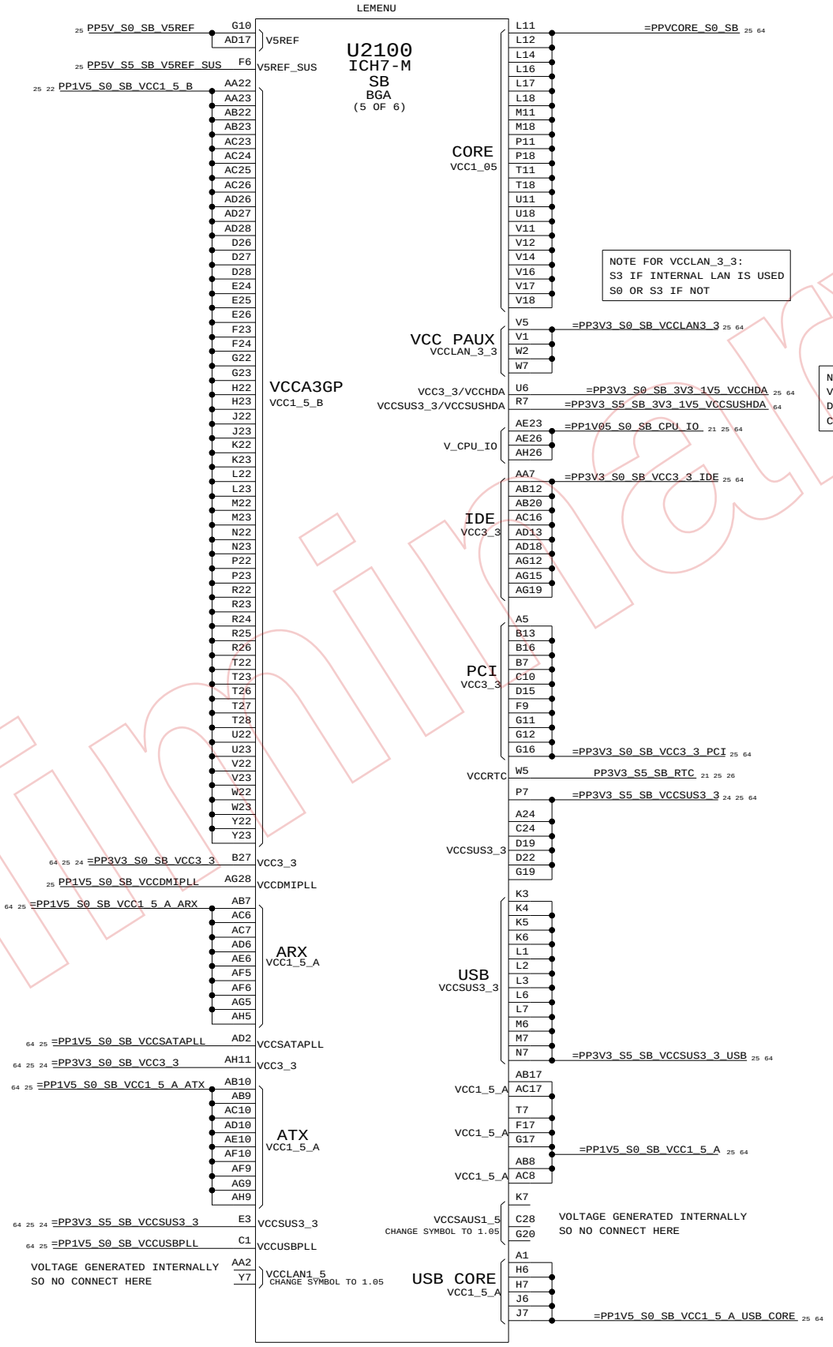

SB: 4 OF 4

NOTICE OF PROPRIETARY PROPERTY

THE INFORMATION CONTAINED HEREIN IS THE PROPRIETARY PROPERTY OF APPLE COMPUTER, INC. THE POSSESSOR AGREES TO THE FOLLOWING

I TO MAINTAIN THE DOCUMENT IN CONFIDENCE

II NOT TO REPRODUCE OR COPY IT

III NOT TO REVEAL OR PUBLISH IN WHOLE OR PART

APPLE COMPUTER INC.

SIZE	DRAWING NUMBER	REV.
D	051-7173	C
SCALE NONE	SHT 24 OF 108	

Preliminary

www.laptopblue.vn

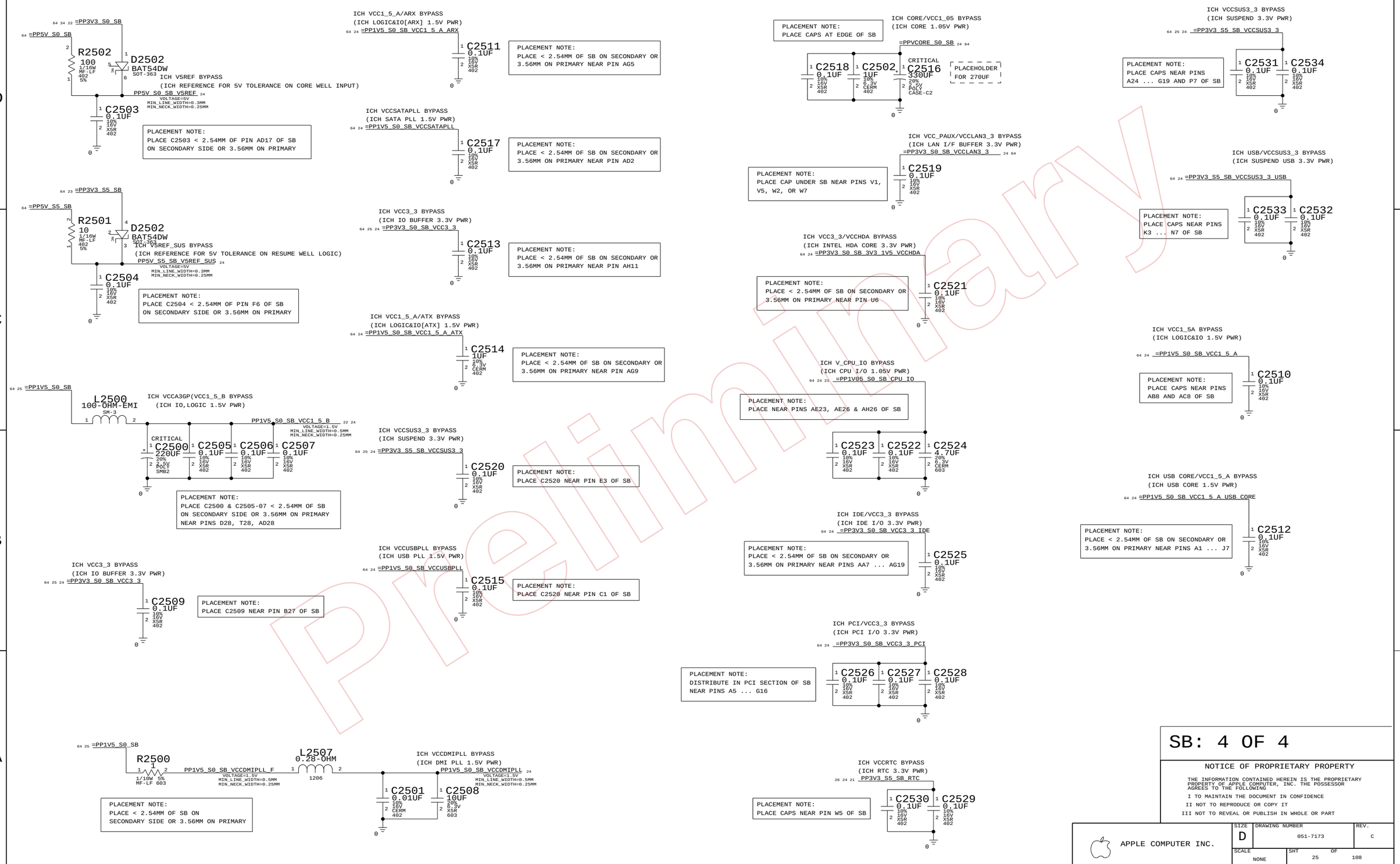

Preliminary

www.laptopblue.vn

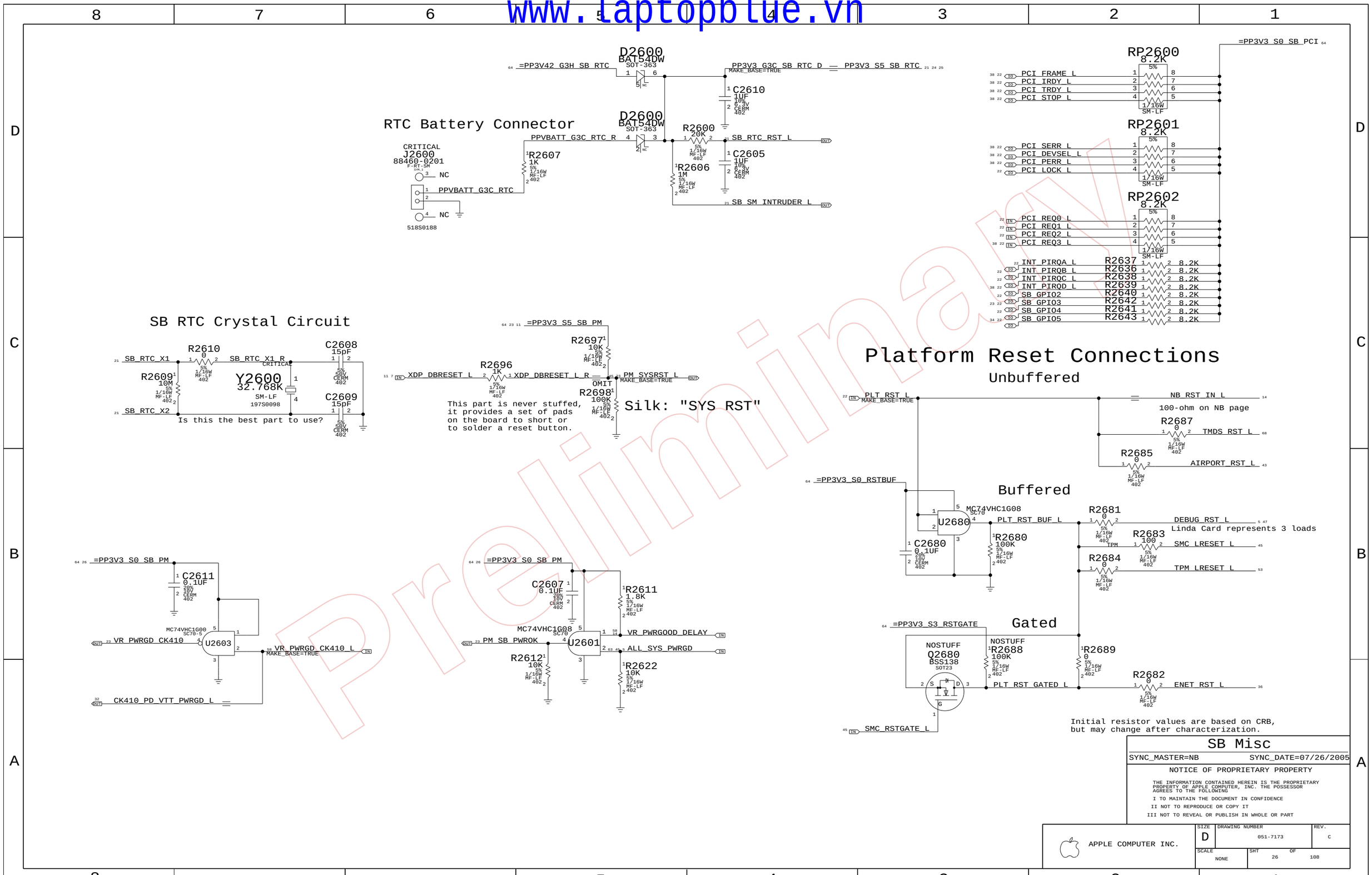

Preliminary

www.laptopblue.vn

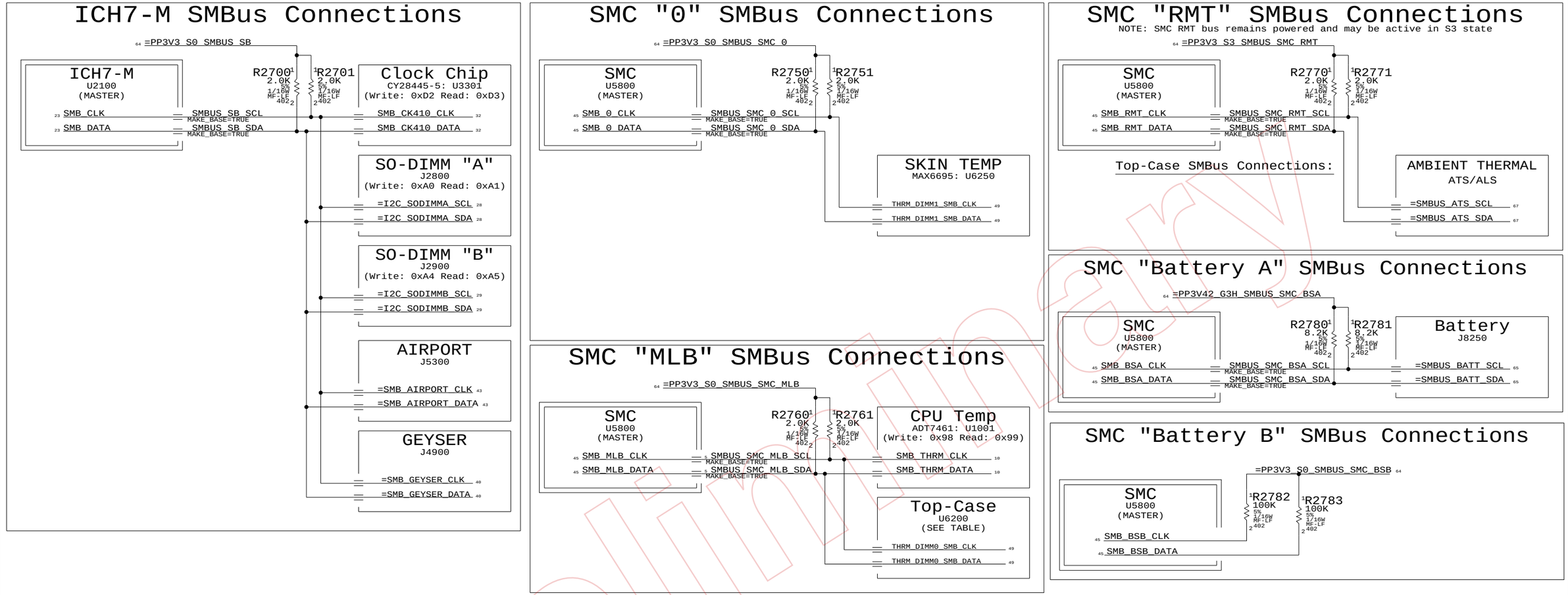

Preliminary

M42 SMBUS CONNECTIONS

SYNC_MASTER=ENET SYNC_DATE=08/30/2005

NOTICE OF PROPRIETARY PROPERTY

THE INFORMATION CONTAINED HEREIN IS THE PROPRIETARY PROPERTY OF APPLE COMPUTER, INC. THE POSSESSOR AGREES TO THE FOLLOWING

I TO MAINTAIN THE DOCUMENT IN CONFIDENCE

II NOT TO REPRODUCE OR COPY IT

III NOT TO REVEAL OR PUBLISH IN WHOLE OR PART

APPLE COMPUTER INC.

SIZE	DRAWING NUMBER	REV.
D	051-7173	C
SCALE NONE	SHT 27 OF 108	

www.laptopblue.vn

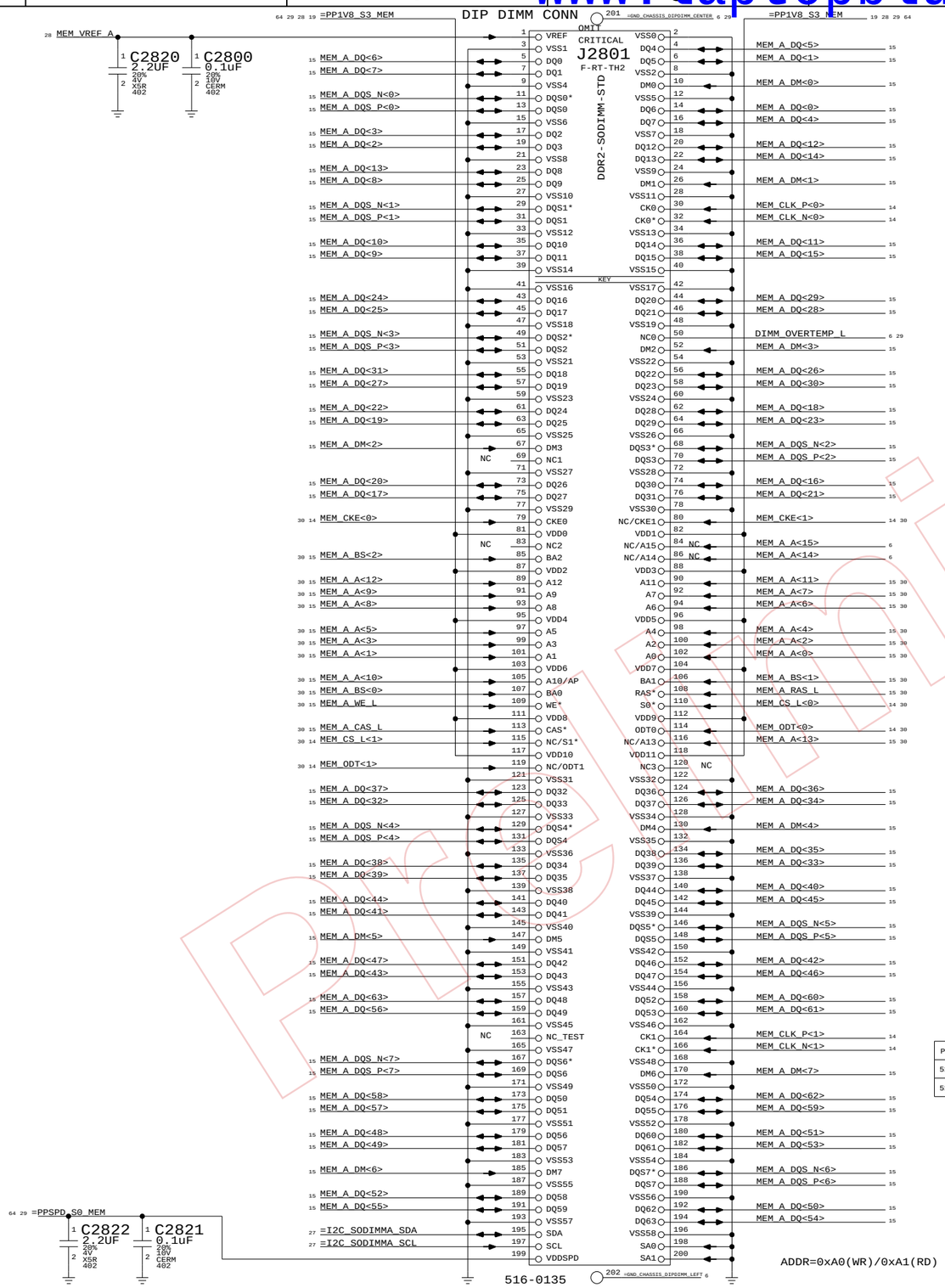

DDR2 VRef

One 0.1uF per connector

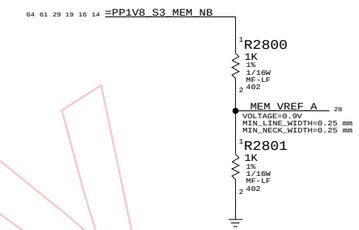

Yellow uses 10K divider and TLV2463
to drive MCH and DIMM connectors.
(See Capell Valley pg 47)

Page Notes

Power aliases required by this page:
- =PP1V8_S3_MEM
- =PPSPD_S0_MEM (2.5V - 3.3V)

Signal aliases required by this page:
- =I2C_MEM_SCL
- =I2C_MEM_SDA

BOM options provided by this page:
(NONE)

DDR2 Bypass Caps

(For return current)

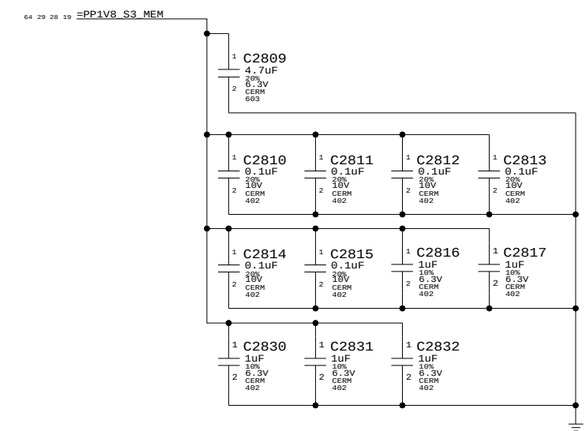

The 4.7uF and 1.0uF caps can be changed to 5x 2.2uF caps,
when they get cheaper.

PART#	QTY	DESCRIPTION	REFERENCE DESIGNATOR(S)	CRITICAL	BOM OPTION
516-0149	1	CONN,200P STD SODIMM OLD REV	J2801	CRITICAL	PVT-DIMM
516-0154	1	CONN,200P STD SODIMM NEW REV 3.5	J2801	CRITICAL	POST-RAMP-DIMM35

Preliminary

DDR2 SO-DIMM Connector A

SYNC_MASTER=MEMORY SYNC_DATE=06/20/2005

NOTICE OF PROPRIETARY PROPERTY

THE INFORMATION CONTAINED HEREIN IS THE PROPRIETARY PROPERTY OF APPLE COMPUTER, INC. THE POSSESSOR AGREES TO THE FOLLOWING

I TO MAINTAIN THE DOCUMENT IN CONFIDENCE
II NOT TO REPRODUCE OR COPY IT
III NOT TO REVEAL OR PUBLISH IN WHOLE OR PART

APPLE COMPUTER INC.

SIZE	DRAWING NUMBER	REV.
D	051-7173	C
SCALE NONE	SHT 28 OF 108	

www.laptopblue.vn

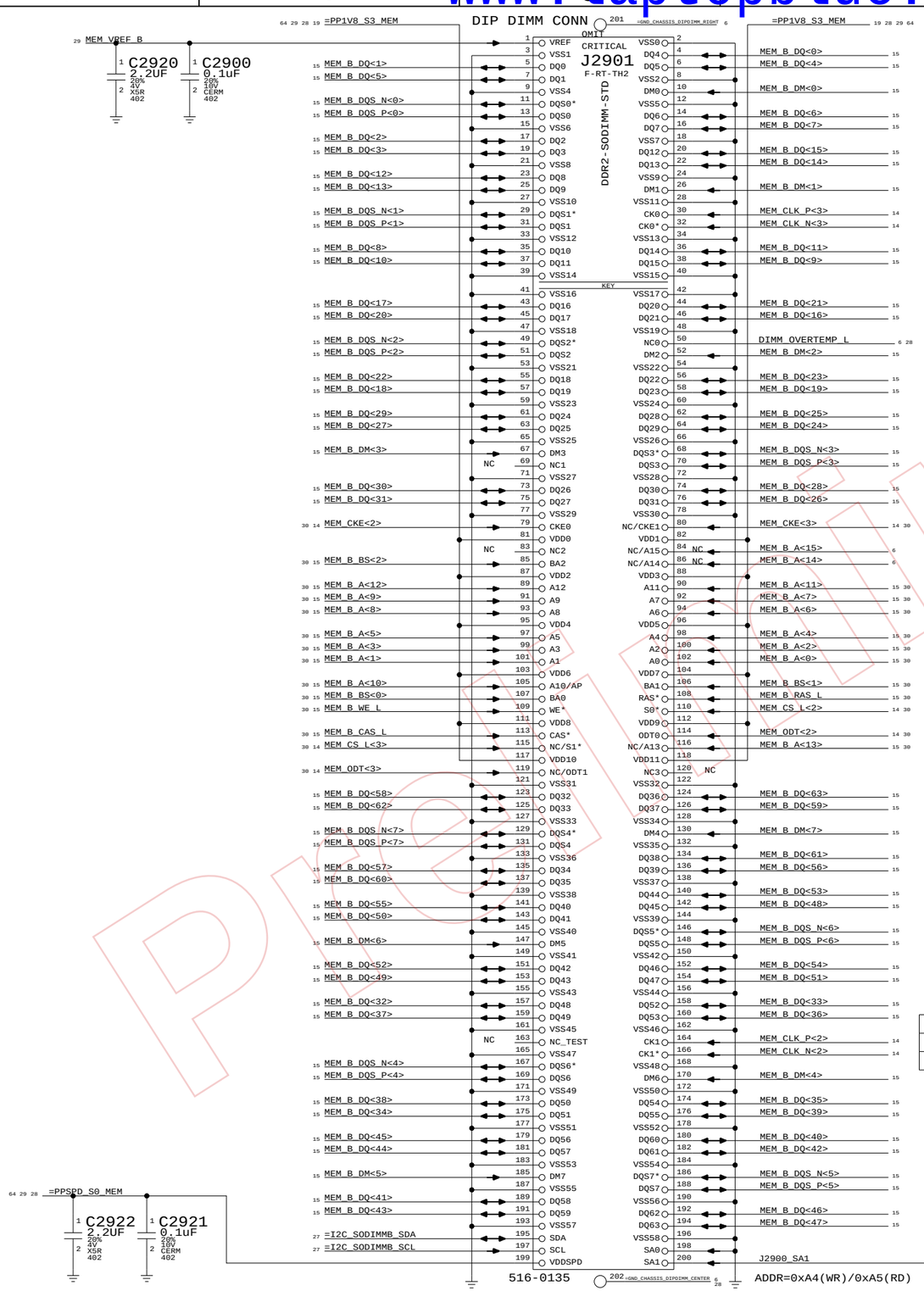

DDR2 VREF (FOR CONNECTOR B)

One 0.1uF per connector

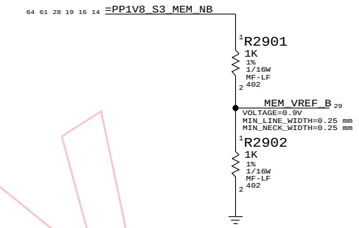

Yellow uses 10K divider and TLV2463
to drive MCH and DIMM connectors.
(See Capell Valley pg 47)

Page Notes

Power aliases required by this page:
- =PP1V8_S3_MEM
- =PPSPD_S0_MEM (2.5V - 3.3V)

Signal aliases required by this page:
- =I2C_MEM_SCL
- =I2C_MEM_SDA

BOM options provided by this page:
(NONE)

NOTE: This page does not supply VREF.
The reference voltage must be provided
by another page.

DDR2 Bypass Caps

(For return current)

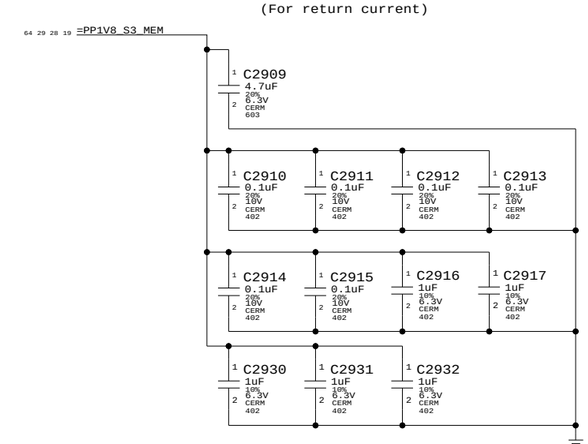

The 4.7uF and 1.0uF caps can be changed to 5x 2.2uF caps,
when they get cheaper.

PART#	QTY	DESCRIPTION	REFERENCE DESIGNATOR(S)	CRITICAL	BOM OPTION
516-0149	1	CONN,200P STD SODIMM OLD REV	J2901	CRITICAL	PVT-DIMM
516-0154	1	CONN,200P STD SODIMM NEW REV 3.5	J2901	CRITICAL	POST-RAMP-DIMM35

DDR2 SO-DIMM Connector B

SYNC_MASTER=MEMORY SYNC_DATE=06/20/2005

NOTICE OF PROPRIETARY PROPERTY

THE INFORMATION CONTAINED HEREIN IS THE PROPRIETARY PROPERTY OF APPLE COMPUTER, INC. THE POSSESSOR AGREES TO THE FOLLOWING

I TO MAINTAIN THE DOCUMENT IN CONFIDENCE

II NOT TO REPRODUCE OR COPY IT

III NOT TO REVEAL OR PUBLISH IN WHOLE OR PART

APPLE COMPUTER INC.

SIZE	DRAWING NUMBER	REV.
D	051-7173	C
SCALE NONE	SHT 29 OF 108	

Preliminary

www.laptopblue.vn

One cap for each side of every RPAK, one cap for every two discrete resistors
BOMOPTION shown at the top of each group applies to every part below it

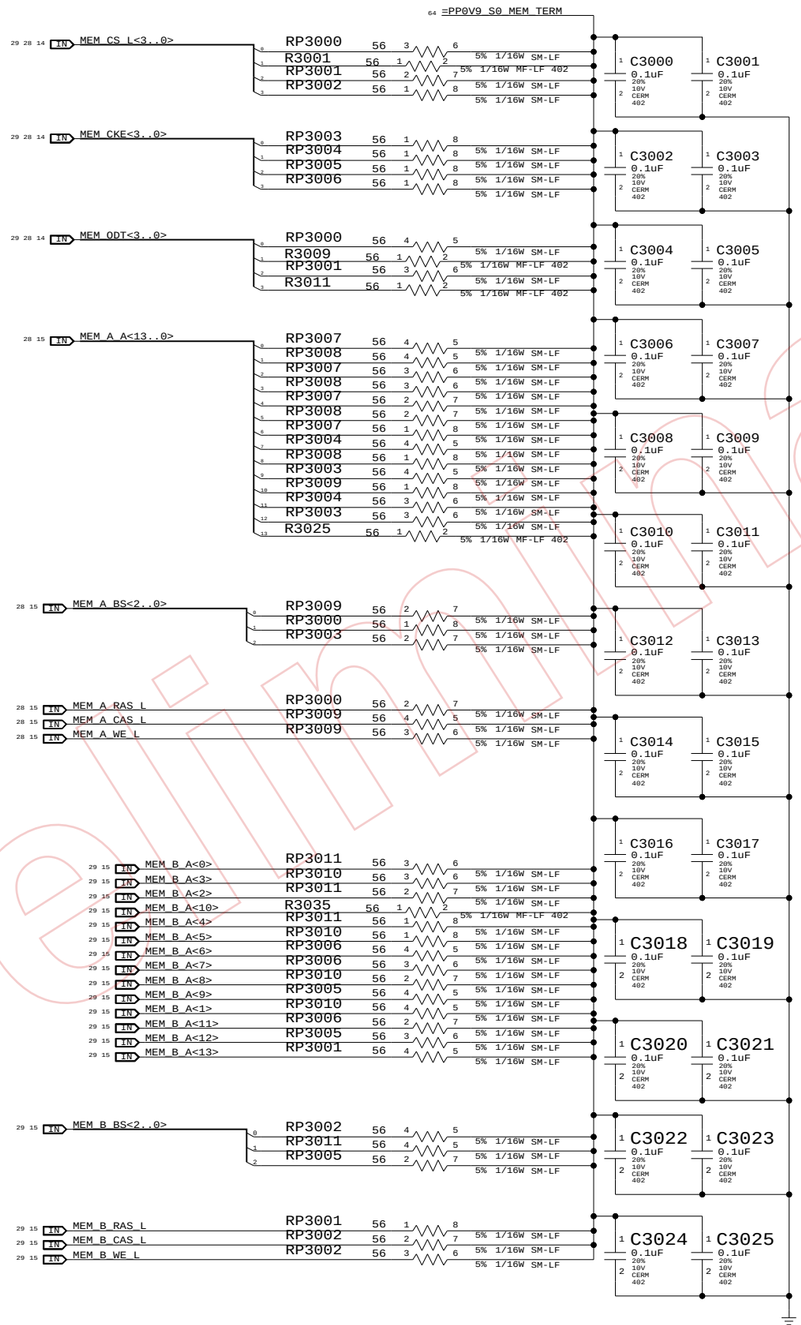

LAYOUT NOTE:PLACE ONE CAP CLOSE TO EVERY TWO PULLUP RESISTORS TERMINATED TO PP0V9_S0_MEM_TERM

Preliminary

Memory Active Termination

NOTICE OF PROPRIETARY PROPERTY

THE INFORMATION CONTAINED HEREIN IS THE PROPRIETARY PROPERTY OF APPLE COMPUTER, INC. THE POSSESSOR AGREES TO THE FOLLOWING

I TO MAINTAIN THE DOCUMENT IN CONFIDENCE

II NOT TO REPRODUCE OR COPY IT

III NOT TO REVEAL OR PUBLISH IN WHOLE OR PART

APPLE COMPUTER INC.

SIZE	DRAWING NUMBER	REV.
D	051-7173	C
SCALE NONE	SHT 30 OF 108	

www.laptopblue.vn

Page Notes

Power aliases required by this page:
- =PP5V_S0_MEMVTT
- =PP1V8_S0_MEMVTT
- =PP0V9_S0_MEMVTT_LDO

Signal aliases required by this page:
(NONE)

BOM options provided by this page:
(NONE)

DDR2 Vtt Regulator

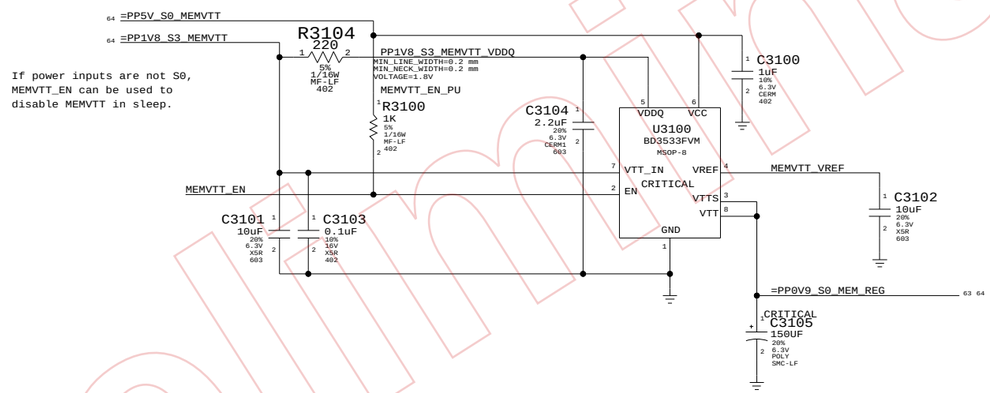

Preliminary

Memory Vtt Supply	
SYNC_MASTER=(MASTER)	SYNC_DATE=(MASTER)

NOTICE OF PROPRIETARY PROPERTY

THE INFORMATION CONTAINED HEREIN IS THE PROPRIETARY PROPERTY OF APPLE COMPUTER, INC. THE POSSESSOR AGREES TO THE FOLLOWING

I TO MAINTAIN THE DOCUMENT IN CONFIDENCE
II NOT TO REPRODUCE OR COPY IT
III NOT TO REVEAL OR PUBLISH IN WHOLE OR PART

APPLE COMPUTER INC.

SIZE	DRAWING NUMBER	REV.
D	051-7173	C
SCALE NONE	SHT 31 OF 108	

www.laptopblue.vn

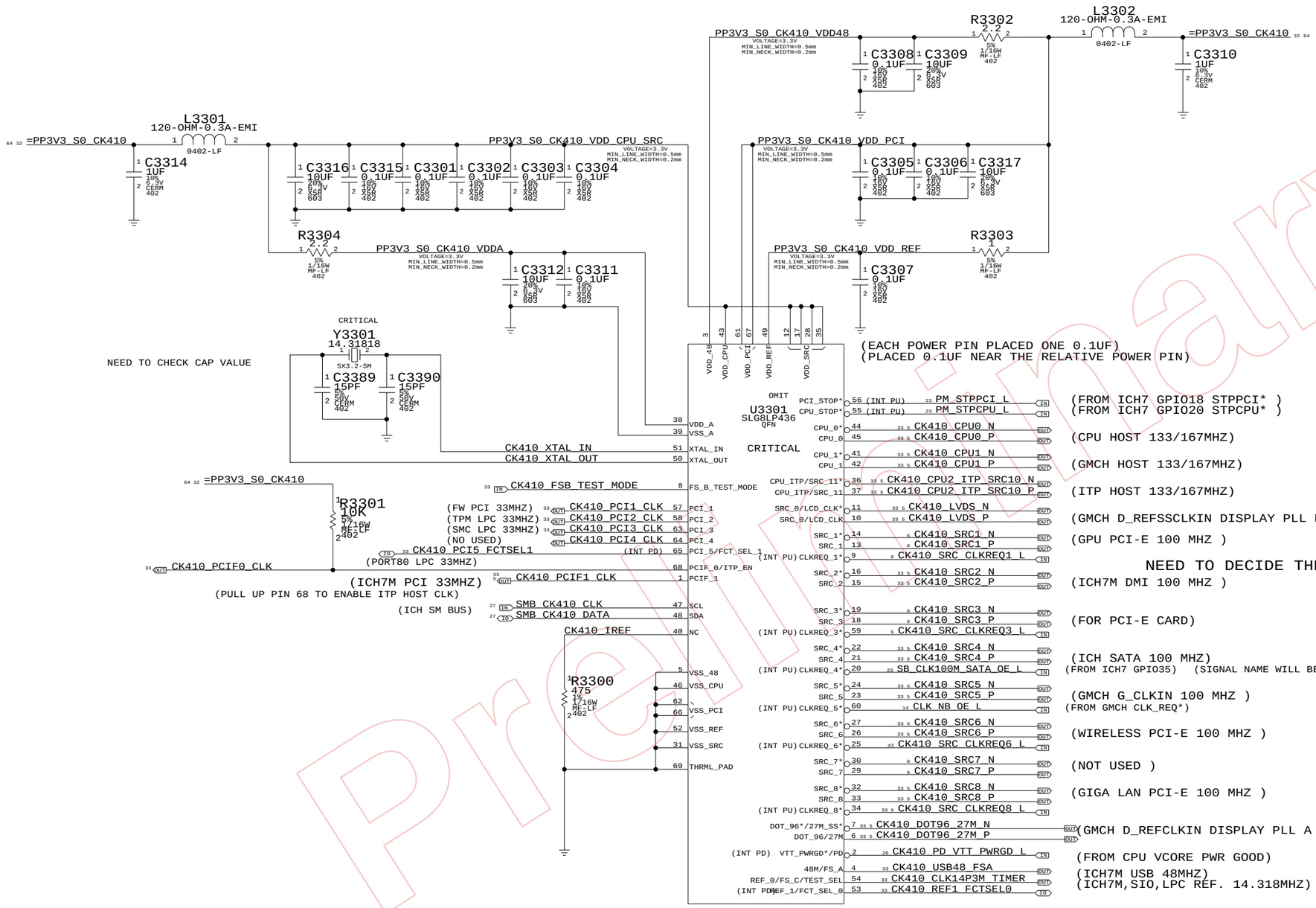

FCTSEL1	FCTSEL0	PIN 6	PIN 7	PIN 10	PIN 11	
0	0	DOT96T	DOT96C	100MT_SST	100MC_SST	* FOR INT. GRAPHIC SYSTEM
0	1	DOT96T	DOT96C	SRCT0	SRCC0	
1	0	27M NON SPREAD	27M SPREAD	SRCT0	SRCC0	* FOR EXT. GRAPHIC SYSTEM
1	1	OFF LOW	TBD	SRCT0	SRCC0	

CLOCKS

SYNC_MASTER=CLOCK SYNC_DATE=06/03/2005

NOTICE OF PROPRIETARY PROPERTY

THE INFORMATION CONTAINED HEREIN IS THE PROPRIETARY PROPERTY OF APPLE COMPUTER, INC. THE POSSESSOR AGREES TO THE FOLLOWING

I TO MAINTAIN THE DOCUMENT IN CONFIDENCE
II NOT TO REPRODUCE OR COPY IT
III NOT TO REVEAL OR PUBLISH IN WHOLE OR PART

APPLE COMPUTER INC.

SIZE	DRAWING NUMBER	REV.
D	051-7173	C

SCALE NONE SHT 33 OF 108

Preliminary

www.laptopblue.vn

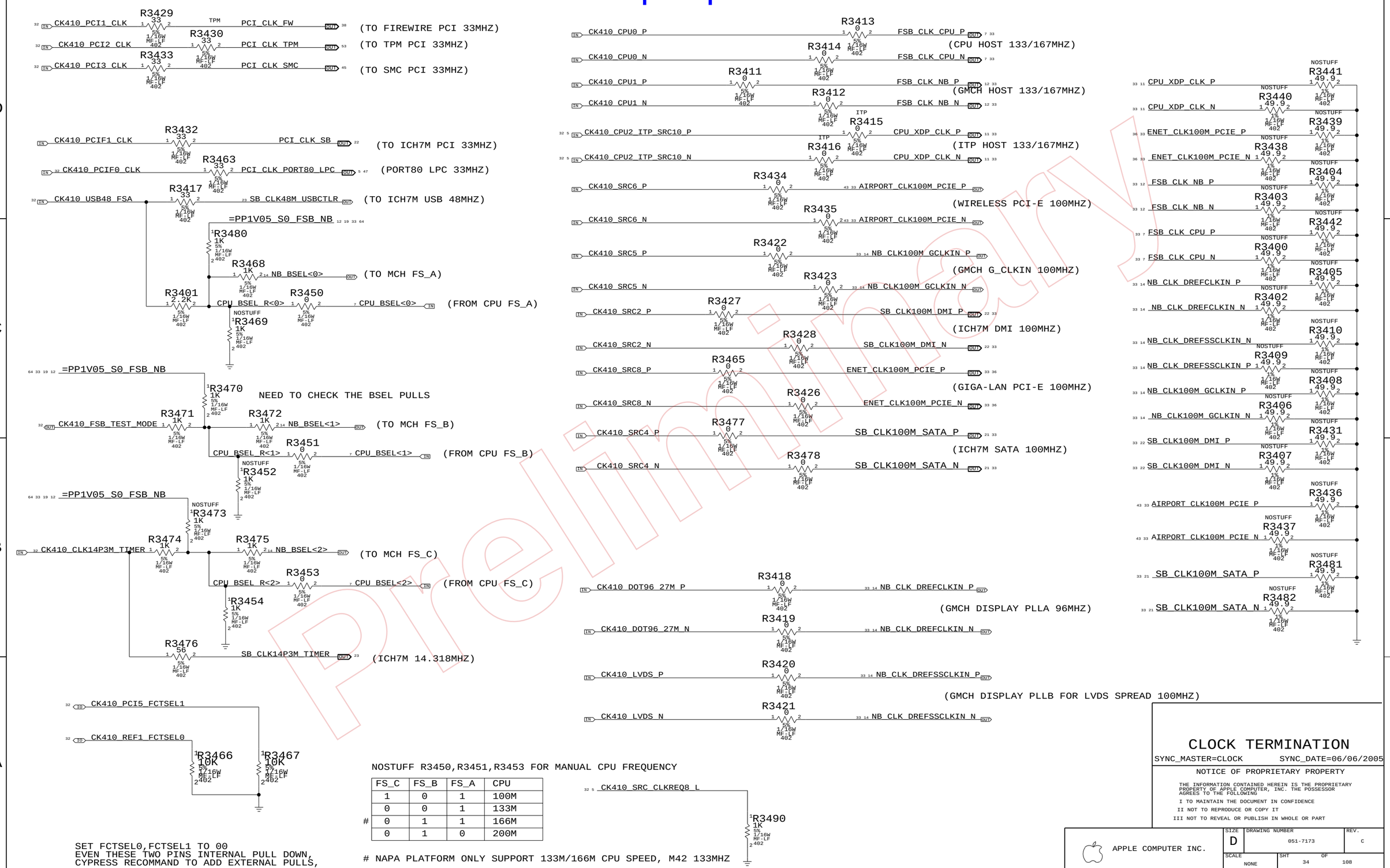

NOSTUFF R3450,R3451,R3453 FOR MANUAL CPU FREQUENCY

	FS_C	FS_B	FS_A	CPU
	1	0	1	100M
	0	0	1	133M
#	0	1	1	166M
	0	1	0	200M

NAPA PLATFORM ONLY SUPPORT 133M/166M CPU SPEED, M42 133MHZ

SET FCTSEL0,FCTSEL1 TO 00
EVEN THESE TWO PINS INTERNAL PULL DOWN,
CYPRESS RECOMMAND TO ADD EXTERNAL PULLS,

CLOCK TERMINATION

SYNC_MASTER=CLOCK SYNC_DATE=06/06/2005

NOTICE OF PROPRIETARY PROPERTY

THE INFORMATION CONTAINED HEREIN IS THE PROPRIETARY PROPERTY OF APPLE COMPUTER, INC. THE POSSESSOR AGREES TO THE FOLLOWING

I TO MAINTAIN THE DOCUMENT IN CONFIDENCE
II NOT TO REPRODUCE OR COPY IT
III NOT TO REVEAL OR PUBLISH IN WHOLE OR PART

APPLE COMPUTER INC.

SIZE	DRAWING NUMBER	REV.
D	051-7173	C
SCALE NONE	SHT 34 OF 108	

www.laptopblue.vn

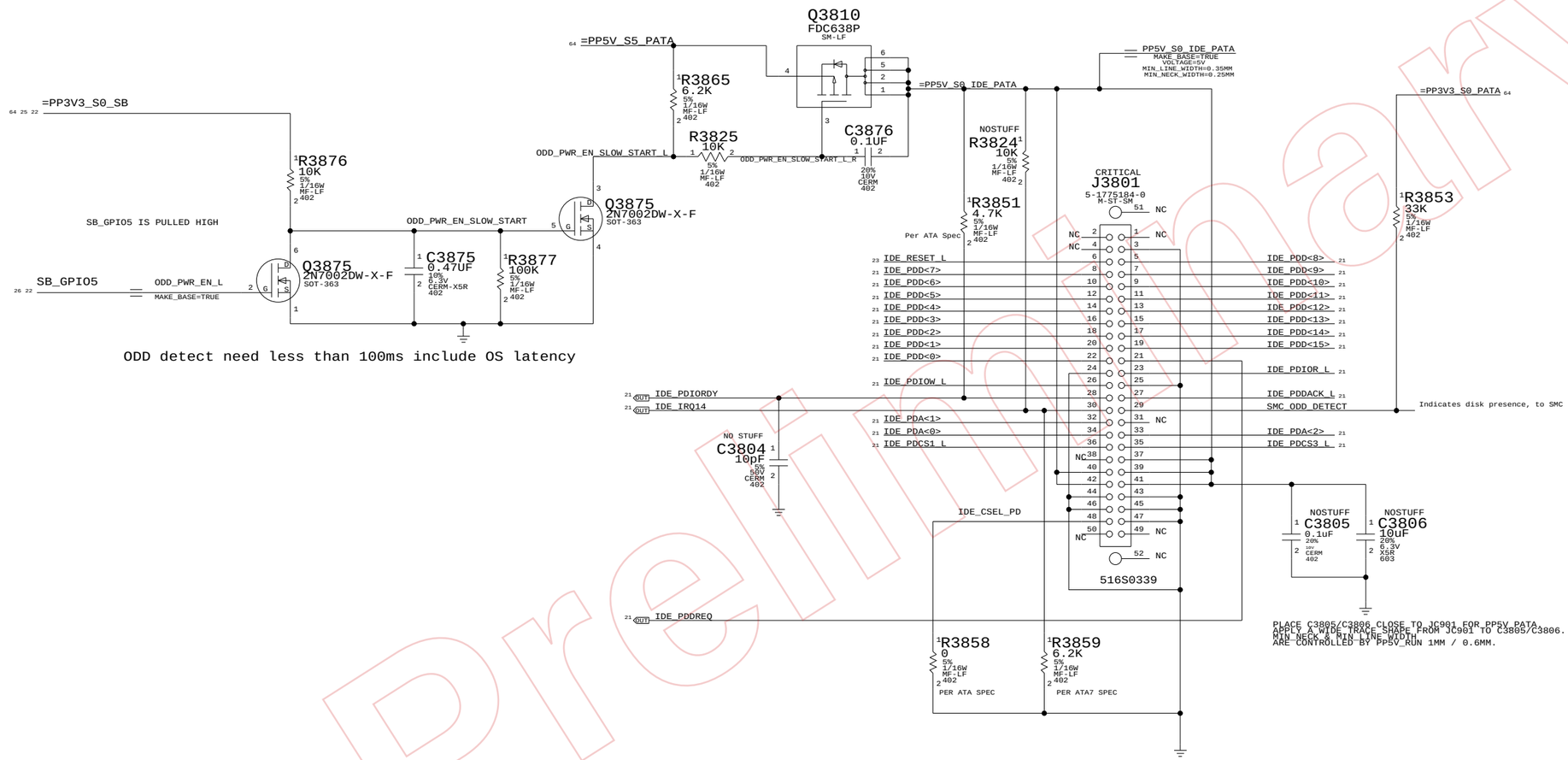

Preliminary

PATA CONNECTOR

NOTICE OF PROPRIETARY PROPERTY

THE INFORMATION CONTAINED HEREIN IS THE PROPRIETARY PROPERTY OF APPLE COMPUTER, INC. THE POSSESSOR AGREES TO THE FOLLOWING

I TO MAINTAIN THE DOCUMENT IN CONFIDENCE

II NOT TO REPRODUCE OR COPY IT

III NOT TO REVEAL OR PUBLISH IN WHOLE OR PART

APPLE COMPUTER INC.

SIZE	DRAWING NUMBER	REV.
D	051-7173	C
SCALE NONE	SHT 38 OF 108	

www.laptopblue.vn

SATA CONNECTOR

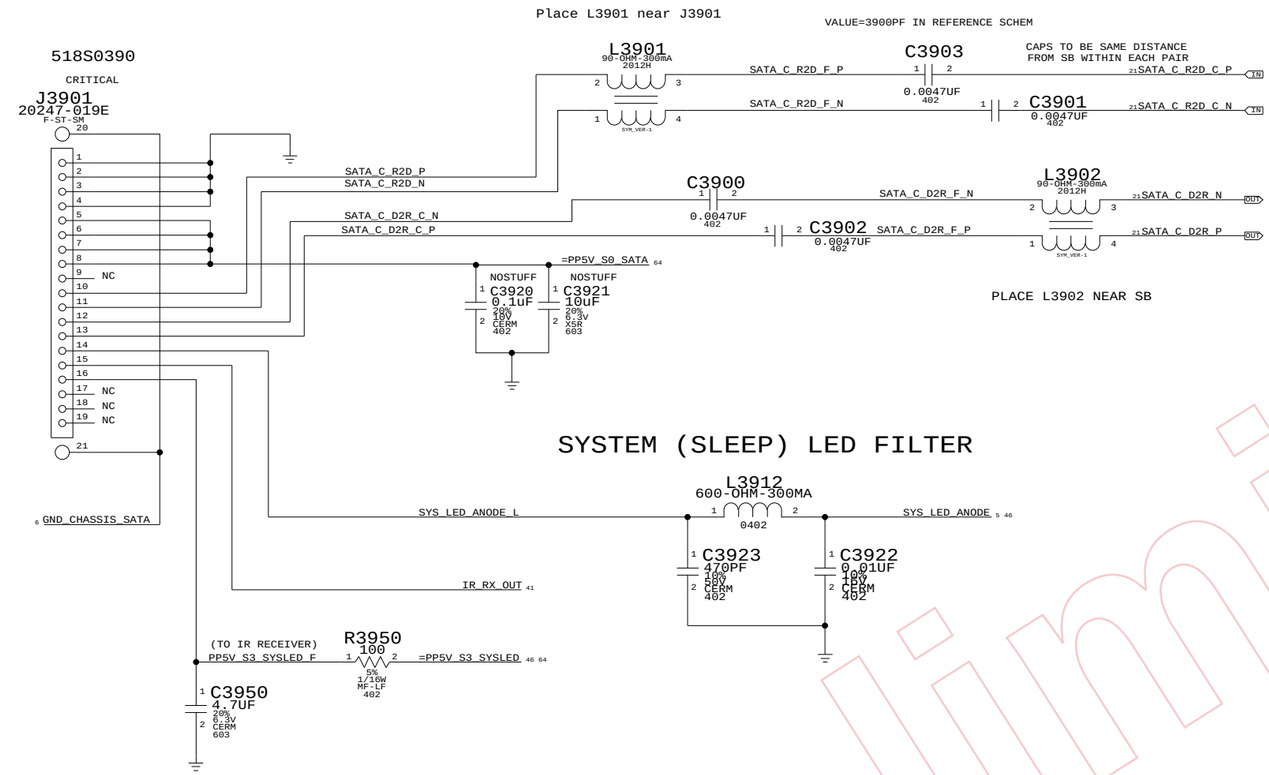

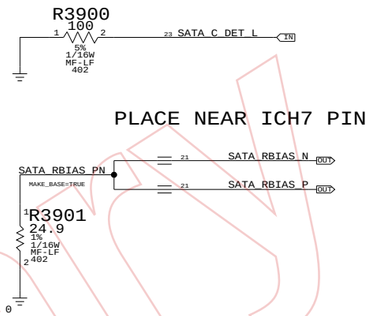

SYSTEM (SLEEP) LED FILTER

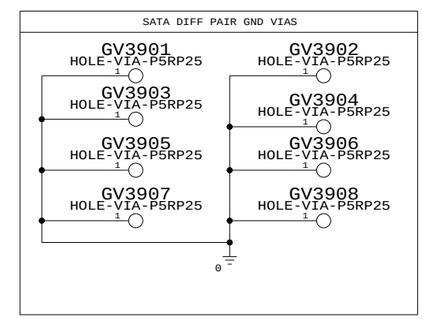

PART NUMBER	ALTERNATE FOR PART NUMBER	BOM OPTION	REF DES	COMMENTS:
155S0227	155S0164	?	L3901,L3902	KEEP MAG.LAYER IN BOM

Preliminary

SATA CONNECTOR

NOTICE OF PROPRIETARY PROPERTY

THE INFORMATION CONTAINED HEREIN IS THE PROPRIETARY PROPERTY OF APPLE COMPUTER, INC. THE POSSESSOR AGREES TO THE FOLLOWING

I TO MAINTAIN THE DOCUMENT IN CONFIDENCE
II NOT TO REPRODUCE OR COPY IT
III NOT TO REVEAL OR PUBLISH IN WHOLE OR PART

APPLE COMPUTER INC.

SIZE	DRAWING NUMBER	REV.
D	051-7173	C
SCALE NONE	SHT 39 OF 108	

www.laptopblue.vn

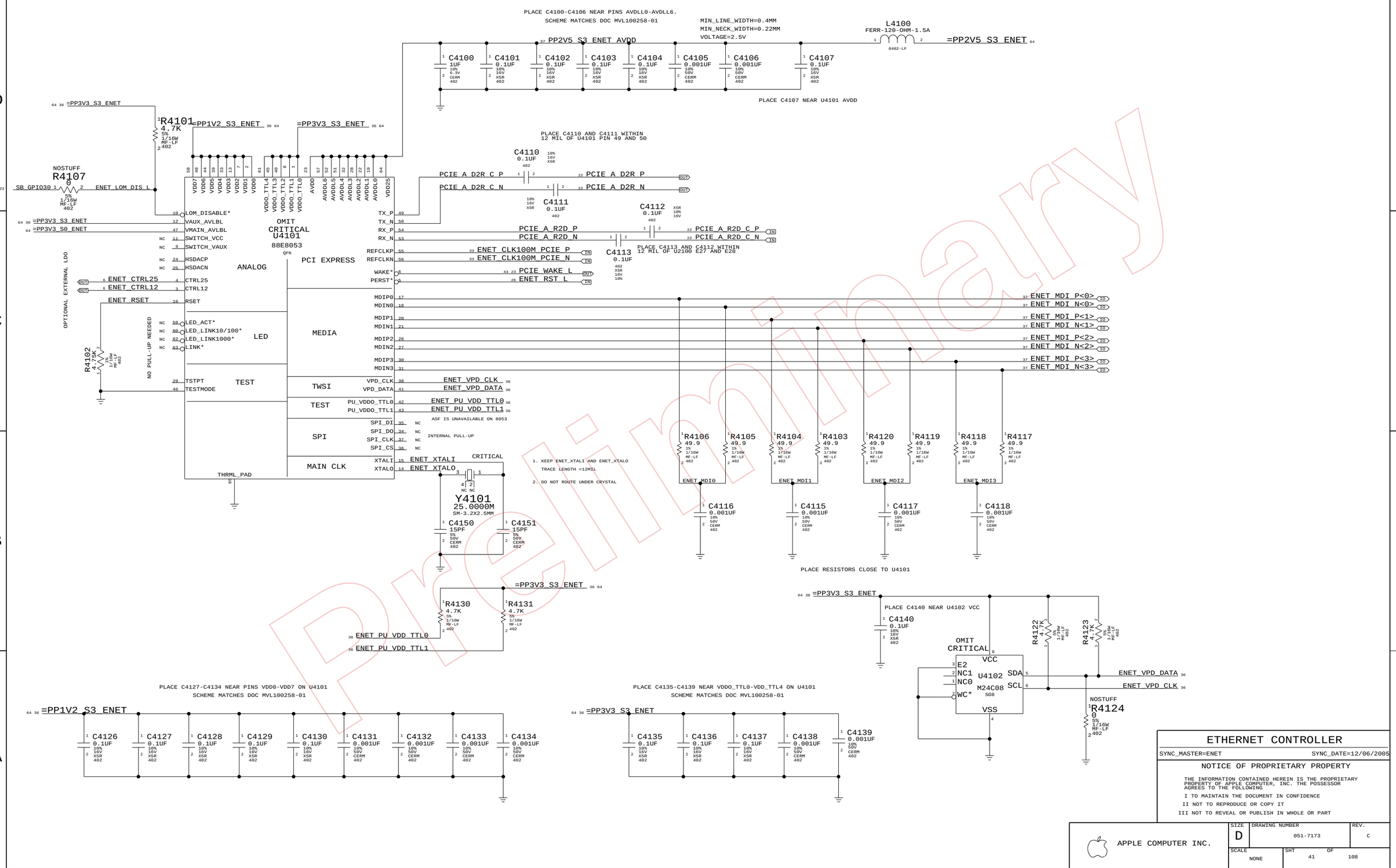

Preliminary

ETHERNET CONTROLLER

SYNC_MASTER=ENET SYNC_DATE=12/06/2005

NOTICE OF PROPRIETARY PROPERTY

THE INFORMATION CONTAINED HEREIN IS THE PROPRIETARY PROPERTY OF APPLE COMPUTER, INC. THE POSSESSOR AGREES TO THE FOLLOWING

I TO MAINTAIN THE DOCUMENT IN CONFIDENCE

II NOT TO REPRODUCE OR COPY IT

III NOT TO REVEAL OR PUBLISH IN WHOLE OR PART

APPLE COMPUTER INC.

SIZE	DRAWING NUMBER	REV.
D	051-7173	C

SCALE NONE SHT 41 OF 108

www.laptopblue.vn

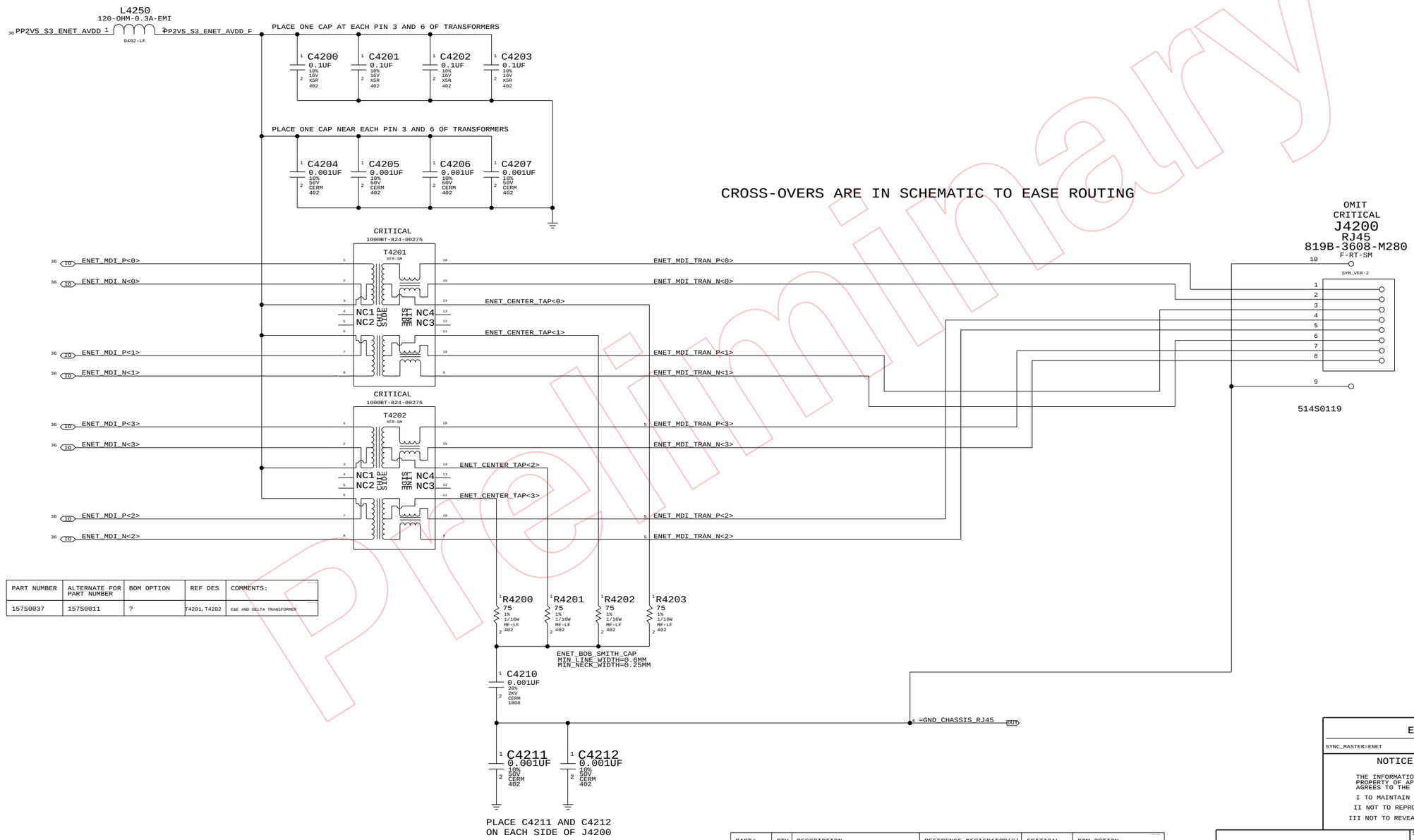

PART NUMBER	ALTERNATE FOR PART NUMBER	BOM OPTION	REF DES	COMMENTS:
157S0037	157S0011	?	T4201,T4202	E&E AND DELTA TRANSFORMER

PART#	QTY	DESCRIPTION	REFERENCE DESIGNATOR(S)	CRITICAL	BOM OPTION
514S0143	1	CONN,8P RJ-45 JACK,MIDPLANE,MG3,LF	J4200	CRITICAL	NORMAL
514S0144	1	CONN,8P RJ-45 JACK,MIDPLANE,BLACK,LF	J4200	CRITICAL	FANCY

ETHERNET CONNECTOR

SYNC_MASTER=ENET SYNC_DATE=11/14/2005

NOTICE OF PROPRIETARY PROPERTY

THE INFORMATION CONTAINED HEREIN IS THE PROPRIETARY PROPERTY OF APPLE COMPUTER, INC. THE POSSESSOR AGREES TO THE FOLLOWING

I TO MAINTAIN THE DOCUMENT IN CONFIDENCE

II NOT TO REPRODUCE OR COPY IT

III NOT TO REVEAL OR PUBLISH IN WHOLE OR PART

APPLE COMPUTER INC.

SIZE	DRAWING NUMBER	REV.
D	051-7173	C
SCALE NONE	SHT 42 OF 108	

Preliminary

www.laptopblue.vn

PAGE NOTES

INPUT
=PP3V3_S0_FW - 3.3V POWER FOR FIREWIRE (MOBILE: OFF DURING SLEEP)
=PP3V3_S0_PCI - 3.3V POWER FOR PCI FIREWIRE (MOBILE: OFF DURING SLEEP)
PCI_GNT3_L - PCI GRANT FROM SB
PCI_CLK_FW - NEED TO REFERENCE TO ALIAS PAGE
PCI_RST_L - PCI RESET FROM SB
FW_PC0 - FIREWIRE POWER CLASS IDENTIFIER

INPUT/OUTPUT
PCI_AD<0..31>,PCI_C_BE_L<0..3>,PCI_FRAME_L,PCI_IRDY_L,PCI_TRDY_L,
PCI_DEVSEL_L, PCI_STOP_L, PCI_PAR, PCI_PERR_L, PCI_SERR_L
FW_A_TPA_P/N, FW_A_TPB_P/N, FW_A_TPBIAS - PORT 0 FIREWIRE DIFF PAIRS
FW_B_TPA_P/N, FW_B_TPB_P/N, FW_B_TPBIAS - PORT 1 FIREWIRE DIFF PAIRS
FW_C_TPA_P/N, FW_C_TPB_P/N, FW_C_TPBIAS - PORT 2 FIREWIRE DIFF PAIRS

OUTPUT
PCI_REQ3_L - PCI REQUEST TO SB
PM_CLKRUN_L - CLOCK-RUN PCI PROTOCOL
INT_PIRQD_L - INTERRUPT TO SB
PCI_PME_FW_L - DEDICATED PME FOR FIREWIRE (SB GPIO1)

PAGE HISTORY

5/19/2005 - FIRST REVISION OF PAGE
6/20/2005 - BGA VERSION OF FW323-06 ADDED
6/21/2005 - CHANGED INT* TO INT_PIRQD_L (PER ARCHITECTURAL DEFINITION)
6/21/2005 - CHANGED PCI_ID TO AD19 (PER ARCHITECTURAL DEFINITION)
6/21/2005 - CHANGED REQ/GNT TO REQ3/GNT3 (PER ARCHITECTURAL DEFINITION)
6/22/2005 - ADDED 510K PULL-DOWN ON RST* AND REMOVED CONNECTION TO PLT_RST_L
6/22/2005 - CHANGED CLK_PME_DIFF PAIR NAMES TO BE RE-USE COMPLIANT
6/22/2005 - REMOVED CONSTRAINT SETS AS THEY WILL BE MANAGED ON BOARD SIDE
6/22/2005 - REMOVED C4421 - REDUNDANT
6/22/2005 - BRING OUT PCB CONNECTION TO BE CONNECTED ON PORT PAGE
7/26/2005 - CONNECTED PIN E10 TO GND

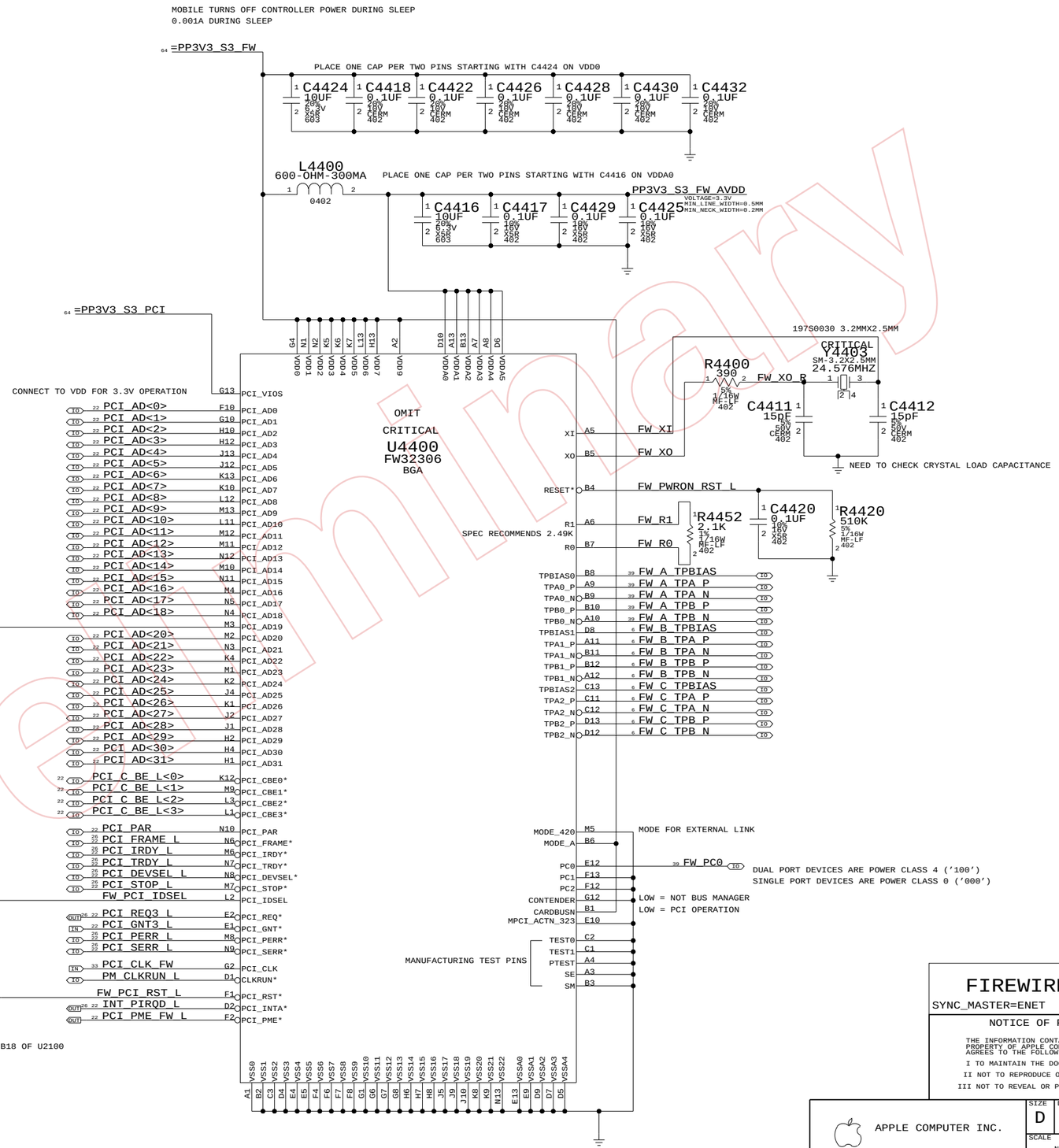

FIREWIRE CONTROLLER

SYNC_MASTER=ENET SYNC_DATE=08/30/2005

NOTICE OF PROPRIETARY PROPERTY

THE INFORMATION CONTAINED HEREIN IS THE PROPRIETARY PROPERTY OF APPLE COMPUTER, INC. THE POSSESSOR AGREES TO THE FOLLOWING

I TO MAINTAIN THE DOCUMENT IN CONFIDENCE
II NOT TO REPRODUCE OR COPY IT
III NOT TO REVEAL OR PUBLISH IN WHOLE OR PART

APPLE COMPUTER INC.

SIZE	DRAWING NUMBER	REV.
D	051-7173	C
SCALE NONE	SHT 44 OF 108	

Preliminary

www.laptopblue.vn

Page Notes

INPUT:

=PPBUS_FW - PORT POWER

=PP3V3_S5_FW - DIGITAL POWER

=GND_CHASSIS_FW_PORT0 - CHASSIS GROUND

=FWPWR_PWRON - ADDITIONAL POWER CONTROL

INPUT/OUTPUT:

FW_TPA0_P/N,FW_TPB0_P/N,FW_TPBIAS0 - FIREWIRE DIFF PAIRS

OUTPUT:

FW_PC0 - POWER CLASS IDENTIFIER (SINGLE PORT - TIE LOW)

PAGE HISTORY

5/19/05 - INITIAL REVISION
6/22/05 - CHANGED DIFF PAIR NAMES TO MATCH REUSE
6/22/05 - REMOVED CONSTRAINTS BECAUSE USING ALLEGRO CONST MANAGER
6/22/05 - CONNECTED FW_PC0 FOR SINGLE PORT
7/26/05 - UPDATED LATE-VG POWER RAIL CIRCUIT FROM M1
7/26/05 - CHANGED CONNECTOR PORT NAMING TO PORT0
7/26/05 - SWITCHED TO 514-0124 FOR PRE-PROTO CONNECTOR
7/26/05 - REMOVED R4520 - IT HASN'T BEEN STUFFED FOR MANY PRODUCTS
7/26/05 - CHANGED FL4590 TO 1.1A VERSION
7/26/05 - REMOVED ETHERNET LOW-POWER MODE CIRCUIT
7/26/05 - UPDATED SIGNAL NAMES FOR FW PORT POWER ENABLE

1394b implementation based on Apple
FireWire Design Guide (FWDG 0.6, 5/14/03)

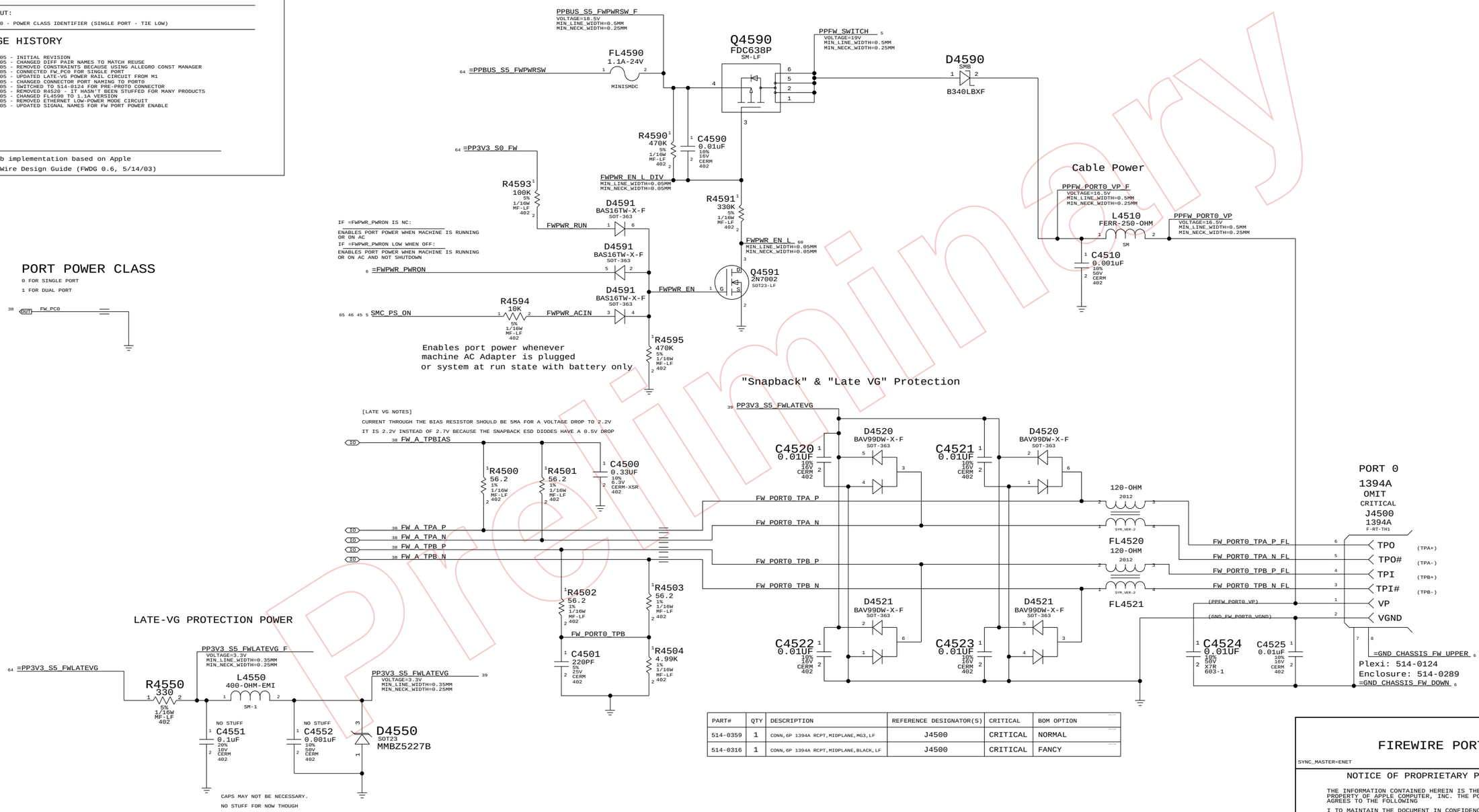

PART#	QTY	DESCRIPTION	REFERENCE DESIGNATOR(S)	CRITICAL	BOM OPTION
514-0359	1	CONN,6P 1394A RCPT,MIDPLANE,MG3,LF	J4500	CRITICAL	NORMAL
514-0316	1	CONN,6P 1394A RCPT,MIDPLANE,BLACK,LF	J4500	CRITICAL	FANCY

FIREWIRE PORT

SYNC_MASTER=ENET SYNC_DATE=11/16/2005

NOTICE OF PROPRIETARY PROPERTY

THE INFORMATION CONTAINED HEREIN IS THE PROPRIETARY PROPERTY OF APPLE COMPUTER, INC. THE POSSESSOR AGREES TO THE FOLLOWING

I TO MAINTAIN THE DOCUMENT IN CONFIDENCE

II NOT TO REPRODUCE OR COPY IT

III NOT TO REVEAL OR PUBLISH IN WHOLE OR PART

APPLE COMPUTER INC.

SIZE	DRAWING NUMBER	REV.
D	051-7173	C
SCALE NONE	SHT 45 OF 108	

Preliminary

www.laptopblue.vn

GEYSER AND DIMM0 REMOTE TEMP SENSORS

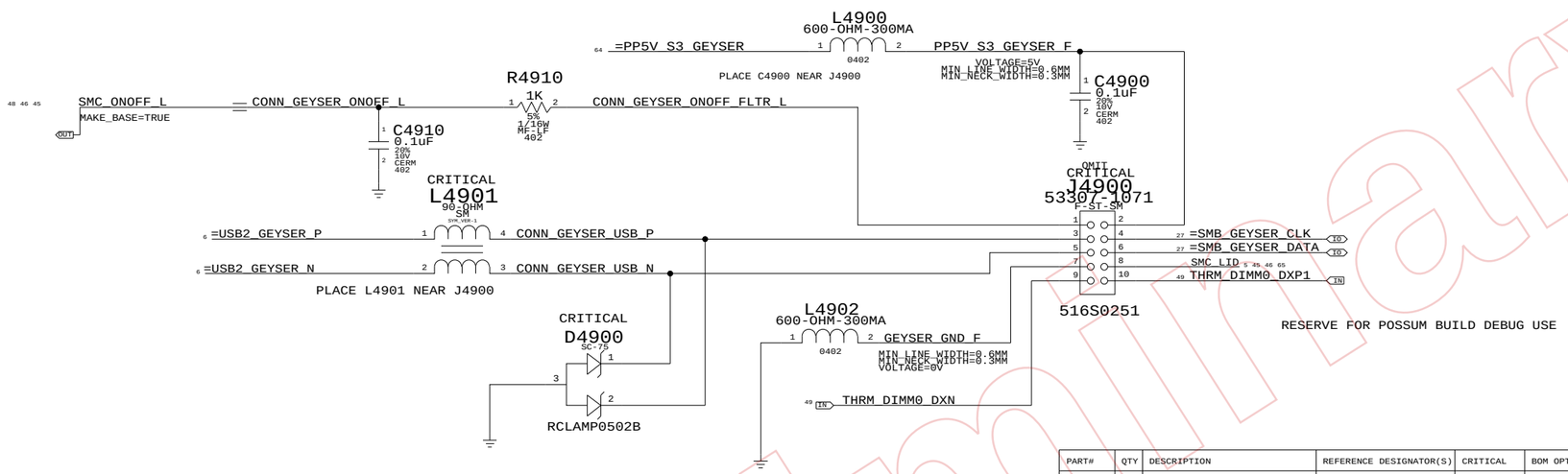

PART#	QTY	DESCRIPTION	REFERENCE DESIGNATOR(S)	CRITICAL	BOM OPTION
516S0482	1	ACES 88646-1071-NS	J4900	CRITICAL	NORMAL
516S0482	1	ACES 88646-1071-NS	J4900	CRITICAL	FANCY

Preliminary

CONNECTOR MISC

SYNC_MASTER=ENET SYNC_DATE=11/16/2005

NOTICE OF PROPRIETARY PROPERTY

THE INFORMATION CONTAINED HEREIN IS THE PROPRIETARY PROPERTY OF APPLE COMPUTER, INC. THE POSSESSOR AGREES TO THE FOLLOWING

I TO MAINTAIN THE DOCUMENT IN CONFIDENCE

II NOT TO REPRODUCE OR COPY IT

III NOT TO REVEAL OR PUBLISH IN WHOLE OR PART

APPLE COMPUTER INC.

SIZE	DRAWING NUMBER	REV.
D	051-7173	C

SCALE NONE SHT 49 OF 108

www.laptopblue.vn

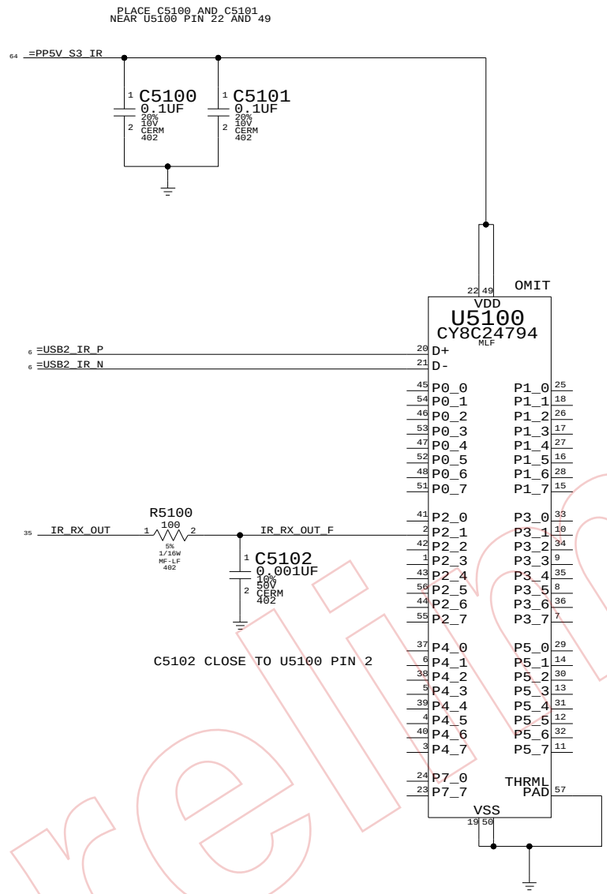

Preliminary

IR CONTROLLER

SYNC_MASTER=ENET SYNC_DATE=11/09/2005

NOTICE OF PROPRIETARY PROPERTY

THE INFORMATION CONTAINED HEREIN IS THE PROPRIETARY PROPERTY OF APPLE COMPUTER, INC. THE POSSESSOR AGREES TO THE FOLLOWING

I TO MAINTAIN THE DOCUMENT IN CONFIDENCE

II NOT TO REPRODUCE OR COPY IT

III NOT TO REVEAL OR PUBLISH IN WHOLE OR PART

APPLE COMPUTER INC.

SIZE	DRAWING NUMBER	REV.
D	051-7173	C

SCALE NONE SHT 51 OF 108

www.laptopblue.vn

USB 2.0 CONNECTORS

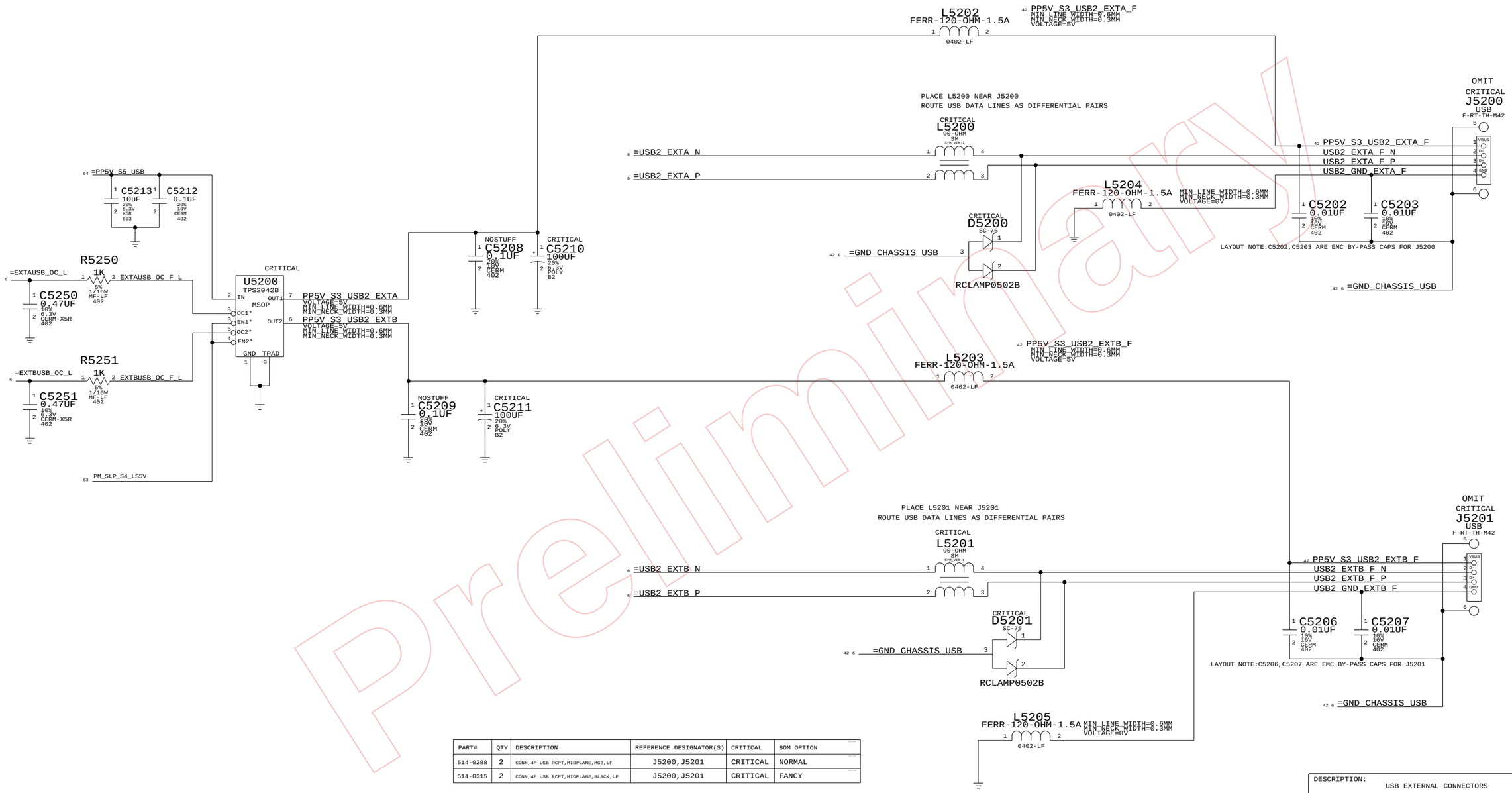

PART#	QTY	DESCRIPTION	REFERENCE DESIGNATOR(S)	CRITICAL	BOM OPTION
514-0288	2	CONN,4P USB RCPT,MIDPLANE,MG3,LF	J5200,J5201	CRITICAL	NORMAL
514-0315	2	CONN,4P USB RCPT,MIDPLANE,BLACK,LF	J5200,J5201	CRITICAL	FANCY

DESCRIPTION:
USB EXTERNAL CONNECTORS

NOTICE OF PROPRIETARY PROPERTY

THE INFORMATION CONTAINED HEREIN IS THE PROPRIETARY PROPERTY OF APPLE COMPUTER, INC. THE POSSESSOR AGREES TO THE FOLLOWING

I TO MAINTAIN THE DOCUMENT IN CONFIDENCE

II NOT TO REPRODUCE OR COPY IT

III NOT TO REVEAL OR PUBLISH IN WHOLE OR PART

APPLE COMPUTER INC.

SIZE	DRAWING NUMBER	REV.
D	051-7173	C
SCALE NONE	SHT 52 OF 108	

Preliminary

www.laptopblue.vn

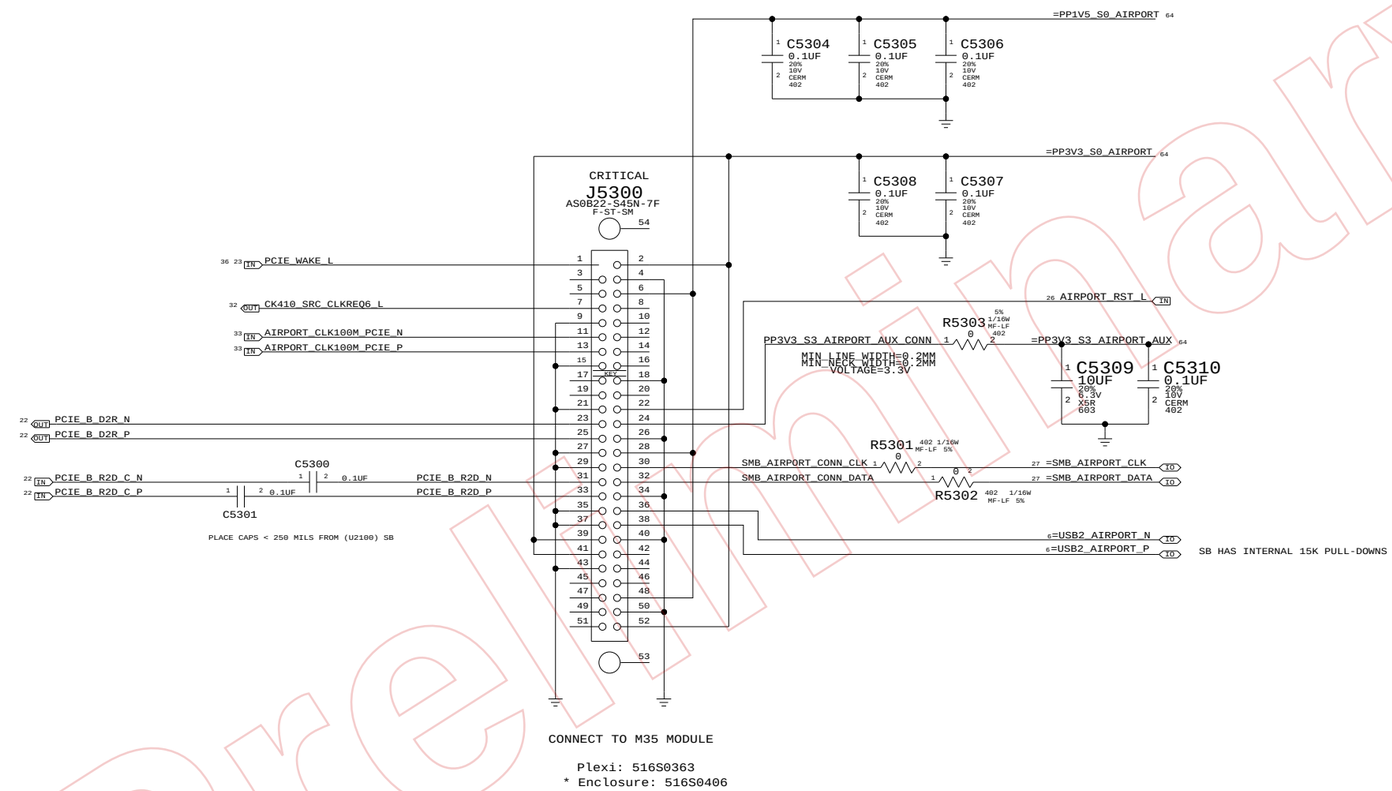

Preliminary

AIRPORT CONN

NOTICE OF PROPRIETARY PROPERTY

THE INFORMATION CONTAINED HEREIN IS THE PROPRIETARY PROPERTY OF APPLE COMPUTER, INC. THE POSSESSOR AGREES TO THE FOLLOWING

I TO MAINTAIN THE DOCUMENT IN CONFIDENCE
II NOT TO REPRODUCE OR COPY IT
III NOT TO REVEAL OR PUBLISH IN WHOLE OR PART

APPLE COMPUTER INC.

SIZE	DRAWING NUMBER	REV.
D	051-7173	C
SCALE NONE	SHT 53 OF 108	

www.laptopblue.vn

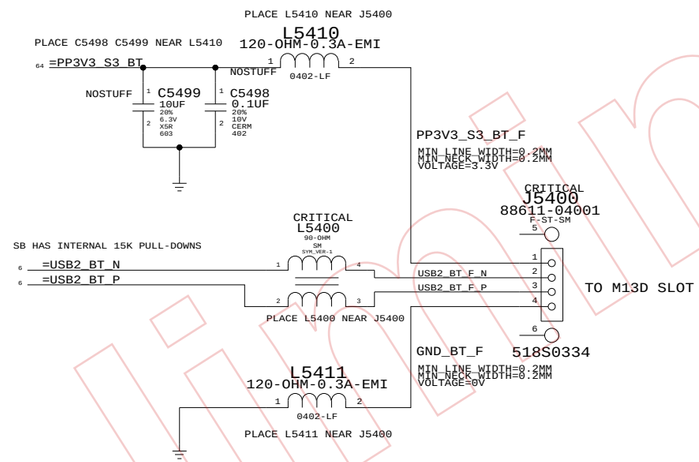

Preliminary

BLUETOOTH INTERFACE

NOTICE OF PROPRIETARY PROPERTY

THE INFORMATION CONTAINED HEREIN IS THE PROPRIETARY PROPERTY OF APPLE COMPUTER, INC. THE POSSESSOR AGREES TO THE FOLLOWING

I TO MAINTAIN THE DOCUMENT IN CONFIDENCE

II NOT TO REPRODUCE OR COPY IT

III NOT TO REVEAL OR PUBLISH IN WHOLE OR PART

APPLE COMPUTER INC.

SIZE	DRAWING NUMBER	REV.
D	051-7173	C
SCALE NONE	SHT 54 OF 108	

www.laptopblue.vn

OMIT

U5800
SMC_H8S2116
BGA
(1 OF 4)

23 OUT	PM_LAN_ENABLE	B12	P10	L13	63 SMC_PM_G2_EN
26 OUT	SMC_RSTGATE_L	C13	P11	L14	65 46 39 5 SMC_PS_ON (Enable AC adapter PWR)
63 26 5 IN	ALL_SYS_PWRGD	A15	P12	L15	22 SPI_ARB
59 46 IN	RSMRST_PWRGD	B14	P13	K12	50 22 SPI_SCLK
23 OUT	SMC_SB_NMI	B15	P14	K13	50 22 SPI_SI
23 OUT	PM_RSMRST_L	C14	P15	K14	50 22 SPI_SO
58 OUT	IMVP_VR_ON	D12	P16	J12	46 SMC_PROCHOT_3_3_L
23 OUT	PM_PWRBTN_L	C15	P17	J13	6 SMC_CPU_INIT_3_3_L
46	SMC_P20	D13	P20	N12	48 SMC_CPU_ISENSE
46	SMC_P21	D14	P21	R13	48 5 SMC_CPU_VSENSE
46	SMC_P22	D15	P22	P13	46 SMC_GPU_ISENSE
46	SMC_P23	E12	P23	R14	46 SMC_GPU_VSENSE
66 46 5 OUT	SMC_BATT_TRICKLE_EN_L	E14	P24	P14	66 SMC_DCIN_ISENSE
66 46 5 OUT	SMC_BATT_CHG_EN	E15	P25	R15	48 SMC_PBUS_VSENSE
46	SMC_P26	E13	P26	N13	66 SMC_BATT_ISENSE
46	SMC_P27	F14	P27	P15	46 SMC_FWIRE_ISENSE
53 47 21 5 IO	LPC_AD<0>	D9	P30/LAD0	C7	23 SMC_WAKE_SCI_L
53 47 21 5 IO	LPC_AD<1>	C9	P31/LAD1	A7	46 SMC_TPM_GPIO
53 47 21 5 IO	LPC_AD<2>	A9	P32/LAD2	B7	53 47 38 23 5 PM_CLKRUN_L
53 47 21 5 IO	LPC_AD<3>	B9	P33/LAD3	D6	53 47 46 23 5 PM_SUS_STAT_L
53 47 21 5 IN	LPC_FRAME_L	D8	P34/LFRAME*	C6	46 SC_TX_L (Serial Port Transmit)
26 IN	SMC_LRESET_L	C8	P35/LRESET*	A6	46 SC_RX_L (Serial Port Receive)
33 IN	PCI_CLK_SMC	A8	P36/LCLK	B6	27 SMB_BSB_CLK (BAT B SMBUS CLK)
53 47 23 5 OUT	INT_SERIRQ	D7	P37/SERIRQ	K4	48 46 46 SMC_ONOFF_L
OUT	SMC_DISPLAY_ENABLE	A5	P40/TMI0	J2	66 65 46 5 SMC_BC_ACOK (AC I/P detect)
46 OUT	SMC_SYS_LED_16B	B5	P41/TMO0	J1	65 46 5 SMC_BS_ALRT_L
27 IO	SMB_BSB_DATA (BAT B SMBUS DATA)	D5	P42/SDA1	J3	63 23 PM_SLP_S3_L
53 OUT	SMC_TPM_PP (TPM physical presence)	C3	P43/TMI1/EXSCK1	J4	63 61 60 23 PM_SLP_S4_L
46	SMC_P44	B1	P44/TMO1	H2	46 23 PM_SLP_S5_L
OUT	SMC_BKLIGHT_ENABLE	C2	P45	H1	46 SMC_SUS_CLK
46	SMC_P46	D3	P46/PWX0/PWM0	G2	27 SMB_0_DATA
46	SMC_SYS_KBDLED	C1	P47/PWX1/PWM1		
47 46 5 OUT	SMC_TX_L (Debug feature,16550 Transmit)	G1	P50		
47 46 5 IN	SMC_RX_L (Debug feature,16550 Receive)	G4	P51		
27 IO	SMB_0_CLK	F2	P52/SCL0		

				P60/KIN0*	L13
				P61/KIN1*	L14
				P62/KIN2*	L15
				P63/KIN3*	K12
				P64/KIN4*	K13
				P65/KIN5*	K14
				P66/IRQ6*/KIN6*	J12
				P67/IRQ7*/KIN7*	J13
				P70/AN0	N12
				P71/AN1	R13
				P72/AN2	P13
				P73/AN3	R14
				P74/AN4	P14
				P75/AN5	R15
				P76/AN6	N13
				P77/AN7	P15
				P80/PME*	C7
				P81/GA20	A7
				P82/CLKRUN*	B7
				P83/LPCPD*	D6
				P84/IRQ3*/TXD1	C6
				P85/IRQ4*/RXD1	A6
				P86/IRQ5*/SCK1/SCL1	B6
				P90/IRQ2*	K4
				P91/IRQ1*	J2
				P92/IRQ0*	J1
				P93/IRQ12*	J3
				P94/IRQ13*	J4
				P95/IRQ14*	H2
				P96/EXCL	H1
				P97/IRQ15*/SDA0	G2

OMIT

U5800
SMC_H8S2116
BGA
(2 OF 4)

21 IO	SMC_RCIN_L	R3	PA0/KIN8*/PA2DC	PE0	M3
47 22 5 IN	BOOT_LPC_SPI_L	P3	PA1/KIN9*/PA2DD	PE1*/ETCK	M2
26 23 IN	PM_SYSRST_L	R2	PA2/KIN10*/PS2AC	PE2*/ETDI	M1
53 46 OUT	SMC_TPM_RESET_L	N3	PA3/KIN11*/PS2AD	PE3*/ETDO	L4
14 6 IN	PM_EXTTS_L<0>	R1	PA4/KIN12*/PS2BC	PE4*/ETMS	L2
23 IO	PM_THRM_L	N2	PA5/KIN13*/PS2BD	PF0/IRQ8*/PWM2	M7
65 46 5 IO	SYS_ONEWIRE	M4	PA6/KIN14*/PS2CC	PF1/IRQ9*/PWM3	P6
23 OUT	PM_BATLOW_L	N1	PA7/KIN15*/PS2CD	PF2/IRQ10*/TMOY	R6
23 IN	SMC_EXTSMI_L	B10	PB0/LSMI*	PF3/IRQ11*/TMOX	N6
23 OUT	SMC_RUNTIME_SCI_L	A10	PB1/LSCI	PF4/PWM4	M6
34 IN	SMC_ODD_DETECT (Optical Disk Insert detect)	D10	PB2	PF5/PWM5	R5
48 OUT	ISENSE_CAL_EN	A11	PB3	PF6/PWM6	P5
46	SMC_EXCARD_CP	B11	PB4	PF7/PWM7	N5
46	SMC_EXCARD_PWR_EN	C11	PB5	PG0/EXIRQ8*/TMIX	P9
46	SMC_EXCARD_PWR_OC_L	A12	PB6	PG1/EXIRQ9*/TMIY	R9
46	SMC_PB7	D11	PB7	PG2/EXIRQ10*/SDA2	N9
46	SMC_FAN_0_CTL	G14	PC0/TIOCA0/WUE8*	PG3/EXIRQ11*/SCL2	P8
51 5 OUT	SMC_FAN_1_CTL	G15	PC1/TIOCB0/WUE9*	PG4/EXIRQ12*/EXSDAA	R8
46	SMC_FAN_2_CTL	G13	PC2/TIOCC0/TCLKA/WUE10*	PG5/EXIRQ13*/EXSCLA	M8
46	SMC_FAN_3_CTL	G12	PC3/TIOCD0/TCLKB/WUE11*	PG6/EXIRQ14*/EXSDAB	P7
46	SMC_FAN_0_TACH	H14	PC4/TIOCA1/WUE12*	PG7/EXIRQ15*/EXSCLB	R7
51 5 IN	SMC_FAN_1_TACH	H15	PC5/TIOCB1/TCLKC/WUE13*		
46	SMC_FAN_2_TACH	H13	PC6/TIOCA2/WUE14*	PH0/EXIRQ6*	E1
46 5	SMC_FAN_3_TACH	H12	PC7/TIOCB2/TCLKD/WUE15*	PH1/EXIRQ7*	F3
52 IN	SMS_X_AXIS	M11	PD0/AN8	PH2/FWE	K2
52 IN	SMS_Y_AXIS	P11	PD1/AN9	PH3/EXEXCL	C4
52 IN	SMS_Z_AXIS	R11	PD2/AN10	PH4	D4
46	SMC_PD3 (ANALOG_ID)	N11	PD3/AN11	PH5	B3
62 46	SMC_NB_ISENSE	P10	PD4/AN12		
61 46	SMC_MEM_ISENSE	R10	PD5/AN13		
46 5	ALS_LEFT	N10	PD6/AN14		
46	ALS_RIGHT	M10	PD7/AN15		

		46	SMC_CASE_OPEN (CASE OPEN/CLOSE DETECT)
47 46 5	IN		SMC_TCK
47 46 5	IN		SMC_TDI
47 46 5	OUT		SMC_TDO
47 46 5	IN		SMC_TMS
		46	SMC_DISP_BKLT_B
	OUT		SMC_DISP_BKLT_A
65 46 40 5	IN		SMC_LID (LID_OPEN/CLOSE SW)
46	IN		SMC_CPU_RESET_3_3_L
66 5	OUT		SMC_BATT_ISET
		46	SMC_BATT_VSET
66	OUT		SMC_SYS_ISET
		46	SMC_SYS_VSET
50 22	IO		SPI_CE_L
		46	SMC_PG1
27	IO		SMB_BSA_DATA
27	IO		SMB_BSA_CLK
27	IO		SMB_RMT_DATA
27	IO		SMB_RMT_CLK
27	IO		SMB_MLB_DATA
27	IO		SMB_MLB_CLK
46	OUT		SMC_PROCHOT
46	OUT		SMC_THRMTRIP
		46	SMC_FWE
		46	ALS_GAIN
46 23	OUT		SMS_INT_L
52	OUT		SMS_ONOFF_L

OMIT

U5800
SMC_H8S2116
BGA
(4 OF 4)

NC	G3	NC0	NC12	F15	NC
NC	H3	NC1	NC13	A14	NC
NC	K3	NC2	NC14	C12	NC
NC	L3	NC3	NC15	C10	NC
NC	N4	NC4	NC16	C5	NC
NC	M5	NC5	NC17	A3	NC
NC	N7	NC6	NC18	B8	NC
NC	M12	NC7	NC19	E4	NC
NC	M13	NC8	NC20	H4	NC
NC	L12	NC9	NC21	M9	NC
NC	K15	NC10	NC22	N8	NC
NC	J14	NC11			

64 48 46 45 =PP3V42_G3H_SMC

CRITICAL
C5802 22UF 20% 6.3V CERM-X5R 805
C5803 0.1UF 20% 10V CERM 402
C5804 0.1UF 20% 10V CERM 402
C5805 0.1UF 20% 10V CERM 402
C5806 0.1UF 20% 10V CERM 402

LAYOUT NOTE:
PLACE R5899, C5820 NEAR SMC PIN N14, N15

(VCL IS INTERNAL RAIL)
SMC_VCL

64 48 46 45 =PP3V42_G3H_SMC

R5899 4.7 5% 1/16W MF-LF 402

C5807 0.47UF 10% 6.3V CERM-X5R 402

LAYOUT NOTE:
PLACE C5807 NEAR PIN F1

64 48 46 45 =PP3V42_G3H_SMC

R5809 10K 5% 1/16W MF-LF 402

R5801 10K 5% 1/16W MF-LF 402

PP3V3_AVREF_SMC 46

SMC_AVCC_RC

C5820 0.1UF 20% 10V CERM 402

66 62 61 48 46 45 GND_SMC_AVSS

47 5 SMC_MD1 (Should PD) (To debug card for mode select)
KBC_MDE (Should PU)

R5802 10K 5% 1/16W MF-LF 402

NOSTUFF
R5803 0 5% 1/16W MF-LF 402

OMIT
U5800
SMC_H8S2116
BGA
(3 OF 4)

AVCC	N14		
AVCC	N15		
VCC	P2		
VCC	P1		
VCC	J15		
VCC	A1		
VCL	F1		
AVREF	M14		
AVREF	M15		
		MD1	E2
		MD2	K1
47 46 5 IN	SMC_RST_L	RES*	E3
46	SMC_XTAL	XTAL	A2
46	SMC_EXTAL	EXTAL	B2
		NMI	F4
		ETRST*	L1
		AVSS	P12
			R12
		VSS	D1, P4, R4, F12, F13, B13, A13, A4, B4, D2

47 5 SMC_NMI (Should PD) (To debug card for mode select) IN

47 5 SMC_TRST_L IN

R5898 10K 5% 1/16W MF-LF 402

XW5800 SM 1 2

GND_SMC_AVSS 45 46 48 61 62 66

21 IO	SMC_RCIN_L
47 22 5 IN	BOOT_LPC_SPI_L
26 23 IN	PM_SYSRST_L
53 46 OUT	SMC_TPM_RESET_L
14 6 IN	PM_EXTTS_L<0>
23 IO	PM_THRM_L
65 46 5 IO	SYS_ONEWIRE
23 OUT	PM_BATLOW_L
23 IN	SMC_EXTSMI_L
23 OUT	SMC_RUNTIME_SCI_L
34 IN	SMC_ODD_DETECT (Optical Disk Insert detect)
48 OUT	ISENSE_CAL_EN
46	SMC_EXCARD_CP
46	SMC_EXCARD_PWR_EN
46	SMC_EXCARD_PWR_OC_L
46	SMC_PB7
46	SMC_FAN_0_CTL
51 5 OUT	SMC_FAN_1_CTL
46	SMC_FAN_2_CTL
46	SMC_FAN_3_CTL
46	SMC_FAN_0_TACH
51 5 IN	SMC_FAN_1_TACH
46	SMC_FAN_2_TACH
46 5	SMC_FAN_3_TACH
52 IN	SMS_X_AXIS
52 IN	SMS_Y_AXIS
52 IN	SMS_Z_AXIS
46	SMC_PD3 (ANALOG_ID)
62 46	SMC_NB_ISENSE
61 46	SMC_MEM_ISENSE
46 5	ALS_LEFT
46	ALS_RIGHT

		46	SMC_CASE_OPEN (CASE OPEN/CLOSE DETECT)
47 46 5	IN		SMC_TCK
47 46 5	IN		SMC_TDI
47 46 5	OUT		SMC_TDO
47 46 5	IN		SMC_TMS
		46	SMC_DISP_BKLT_B
	OUT		SMC_DISP_BKLT_A
65 46 40 5	IN		SMC_LID (LID_OPEN/CLOSE SW)
46	IN		SMC_CPU_RESET_3_3_L
66 5	OUT		SMC_BATT_ISET
		46	SMC_BATT_VSET
66	OUT		SMC_SYS_ISET
		46	SMC_SYS_VSET
50 22	IO		SPI_CE_L
		46	SMC_PG1
27	IO		SMB_BSA_DATA
27	IO		SMB_BSA_CLK
27	IO		SMB_RMT_DATA
27	IO		SMB_RMT_CLK
27	IO		SMB_MLB_DATA
27	IO		SMB_MLB_CLK
46	OUT		SMC_PROCHOT
46	OUT		SMC_THRMTRIP
		46	SMC_FWE
		46	ALS_GAIN
46 23	OUT		SMS_INT_L
52	OUT		SMS_ONOFF_L

21 IO	SMC_RCIN_L
47 22 5 IN	BOOT_LPC_SPI_L
26 23 IN	PM_SYSRST_L
53 46 OUT	SMC_TPM_RESET_L
14 6 IN	PM_EXTTS_L<0>
23 IO	PM_THRM_L
65 46 5 IO	SYS_ONEWIRE
23 OUT	PM_BATLOW_L
23 IN	SMC_EXTSMI_L
23 OUT	SMC_RUNTIME_SCI_L
34 IN	SMC_ODD_DETECT (Optical Disk Insert detect)
48 OUT	ISENSE_CAL_EN
46	SMC_EXCARD_CP
46	SMC_EXCARD_PWR_EN
46	SMC_EXCARD_PWR_OC_L
46	SMC_PB7
46	SMC_FAN_0_CTL
51 5 OUT	SMC_FAN_1_CTL
46	SMC_FAN_2_CTL
46	SMC_FAN_3_CTL
46	SMC_FAN_0_TACH
51 5 IN	SMC_FAN_1_TACH
46	SMC_FAN_2_TACH
46 5	SMC_FAN_3_TACH
52 IN	SMS_X_AXIS
52 IN	SMS_Y_AXIS
52 IN	SMS_Z_AXIS
46	SMC_PD3 (ANALOG_ID)
62 46	SMC_NB_ISENSE
61 46	SMC_MEM_ISENSE
46 5	ALS_LEFT
46	ALS_RIGHT

		46	SMC_CASE_OPEN (CASE OPEN/CLOSE DETECT)
47 46 5	IN		SMC_TCK
47 46 5	IN		SMC_TDI
47 46 5	OUT		SMC_TDO
47 46 5	IN		SMC_TMS
		46	SMC_DISP_BKLT_B
	OUT		SMC_DISP_BKLT_A
65 46 40 5	IN		SMC_LID (LID_OPEN/CLOSE SW)
46	IN		SMC_CPU_RESET_3_3_L
66 5	OUT		SMC_BATT_ISET
		46	SMC_BATT_VSET
66	OUT		SMC_SYS_ISET
		46	SMC_SYS_VSET
50 22	IO		SPI_CE_L
		46	SMC_PG1
27	IO		SMB_BSA_DATA
27	IO		SMB_BSA_CLK
27	IO		SMB_RMT_DATA
27	IO		SMB_RMT_CLK
27	IO		SMB_MLB_DATA
27	IO		SMB_MLB_CLK
46	OUT		SMC_PROCHOT
46	OUT		SMC_THRMTRIP
		46	SMC_FWE
		46	ALS_GAIN
46 23	OUT		SMS_INT_L
52	OUT		SMS_ONOFF_L

SMC

SYNC_MASTER=SMC SYNC_DATE=08/18/2005

NOTICE OF PROPRIETARY PROPERTY

THE INFORMATION CONTAINED HEREIN IS THE PROPRIETARY PROPERTY OF APPLE COMPUTER, INC. THE POSSESSOR AGREES TO THE FOLLOWING

I TO MAINTAIN THE DOCUMENT IN CONFIDENCE
II NOT TO REPRODUCE OR COPY IT
III NOT TO REVEAL OR PUBLISH IN WHOLE OR PART

APPLE COMPUTER INC.

SIZE	DRAWING NUMBER	REV.
D	051-7173	C
SCALE NONE	SHT 58 OF 108	

www.laptopblue.vn

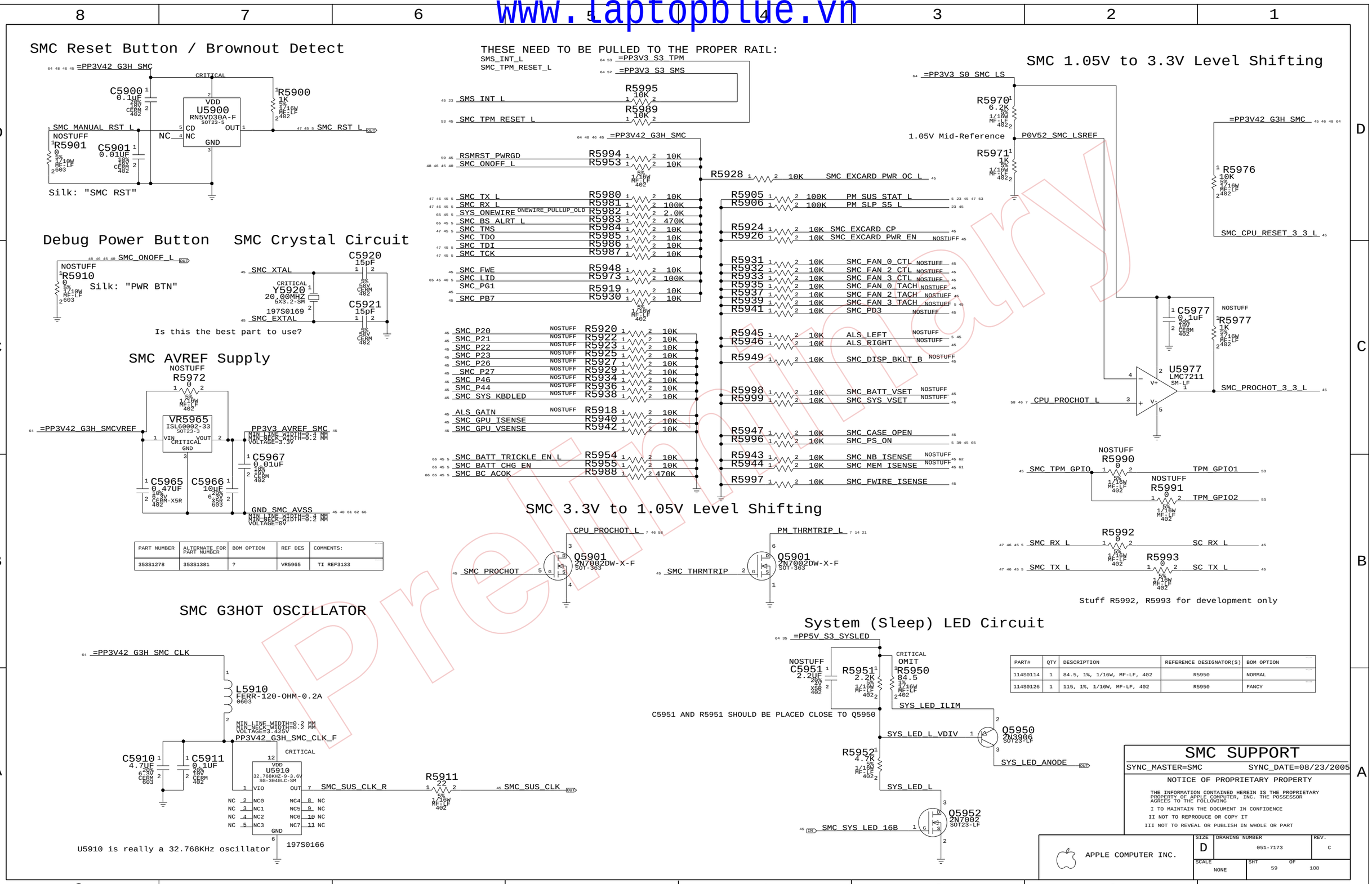

PART NUMBER	ALTERNATE FOR PART NUMBER	BOM OPTION	REF DES	COMMENTS:
353S1278	353S1381	?	VR5965	TI REF3133

PART#	QTY	DESCRIPTION	REFERENCE DESIGNATOR(S)	BOM OPTION
114S0114	1	84.5, 1%, 1/16W, MF-LF, 402	R5950	NORMAL
114S0126	1	115, 1%, 1/16W, MF-LF, 402	R5950	FANCY

Preliminary

www.laptopblue.vn

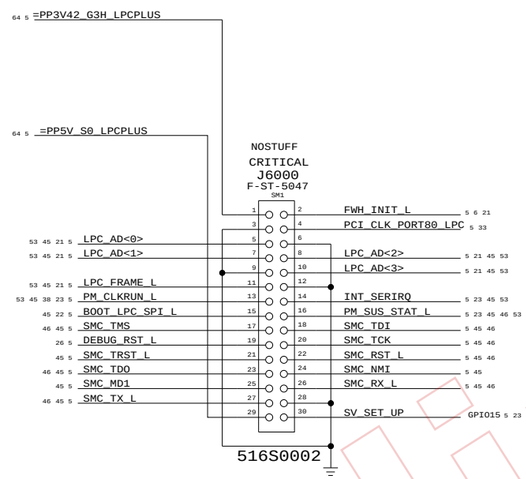

Preliminary

LPC+ Debug Connector

SYNC_MASTER=NB SYNC_DATE=06/30/2005

NOTICE OF PROPRIETARY PROPERTY

THE INFORMATION CONTAINED HEREIN IS THE PROPRIETARY PROPERTY OF APPLE COMPUTER, INC. THE POSSESSOR AGREES TO THE FOLLOWING

I TO MAINTAIN THE DOCUMENT IN CONFIDENCE

II NOT TO REPRODUCE OR COPY IT

III NOT TO REVEAL OR PUBLISH IN WHOLE OR PART

APPLE COMPUTER INC.

SIZE	DRAWING NUMBER	REV.
D	051-7173	C

SCALE NONE SHT 60 OF 108

www.laptopblue.vn

CPU CURRENT SENSE

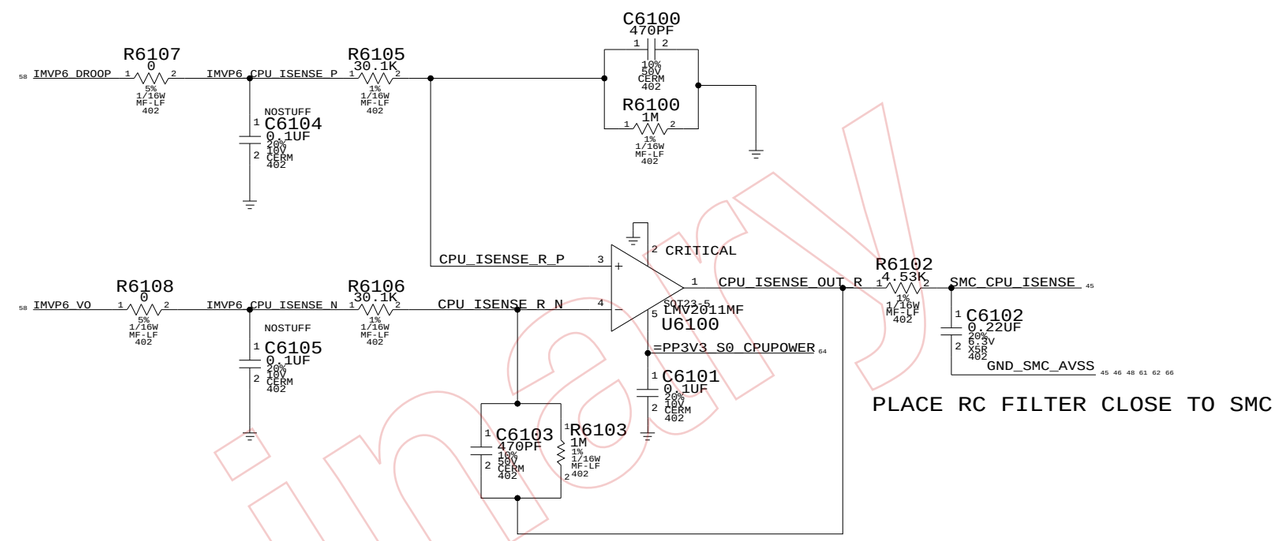

PLACE RC FILTER CLOSE TO SMC

PROCESSOR DCIN VOLTAGE SENSE

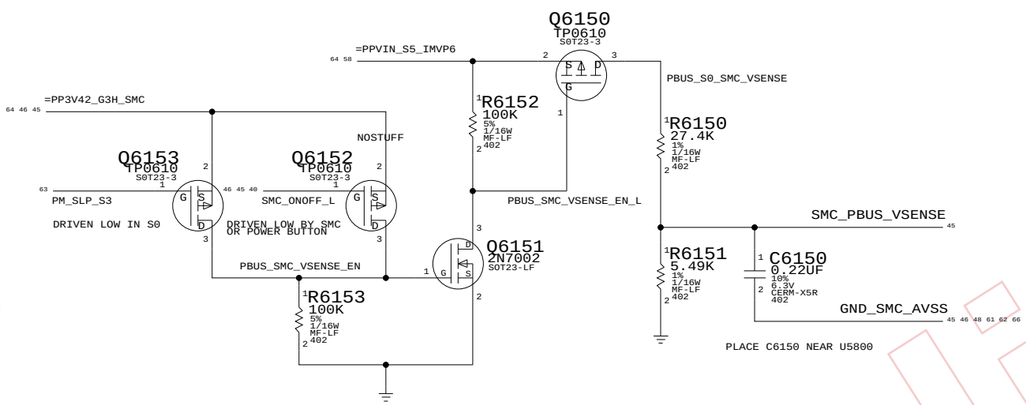

CPU VOLTAGE SENSE

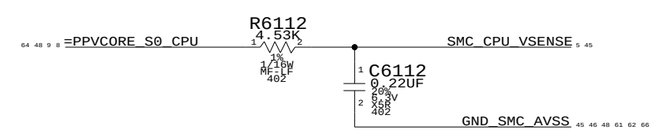

PLACE RC FILTER CLOSE TO SMC

Current Sense Calibration Circuit

Switches in fixed load on power supplies to calibrate current sense circuits

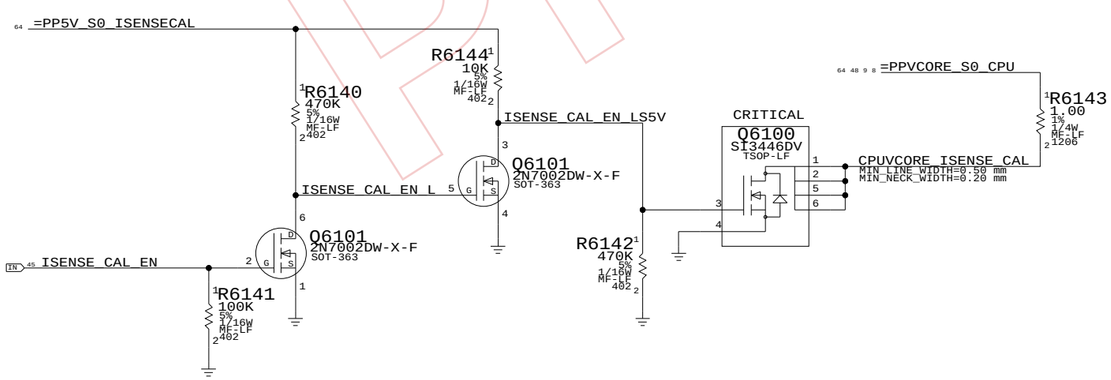

Preliminary

CPU Current & Voltage Sense		
SYNC_MASTER=ENET		SYNC_DATE=08/30/2005

NOTICE OF PROPRIETARY PROPERTY

THE INFORMATION CONTAINED HEREIN IS THE PROPRIETARY PROPERTY OF APPLE COMPUTER, INC. THE POSSESSOR AGREES TO THE FOLLOWING

I TO MAINTAIN THE DOCUMENT IN CONFIDENCE

II NOT TO REPRODUCE OR COPY IT

III NOT TO REVEAL OR PUBLISH IN WHOLE OR PART

APPLE COMPUTER INC.	SIZE	DRAWING NUMBER	REV.
	D	051-7173	C
	SCALE NONE	SHT 61 OF 108	

www.laptopblue.vn

DIMM0 TEMPERATURE ZONE

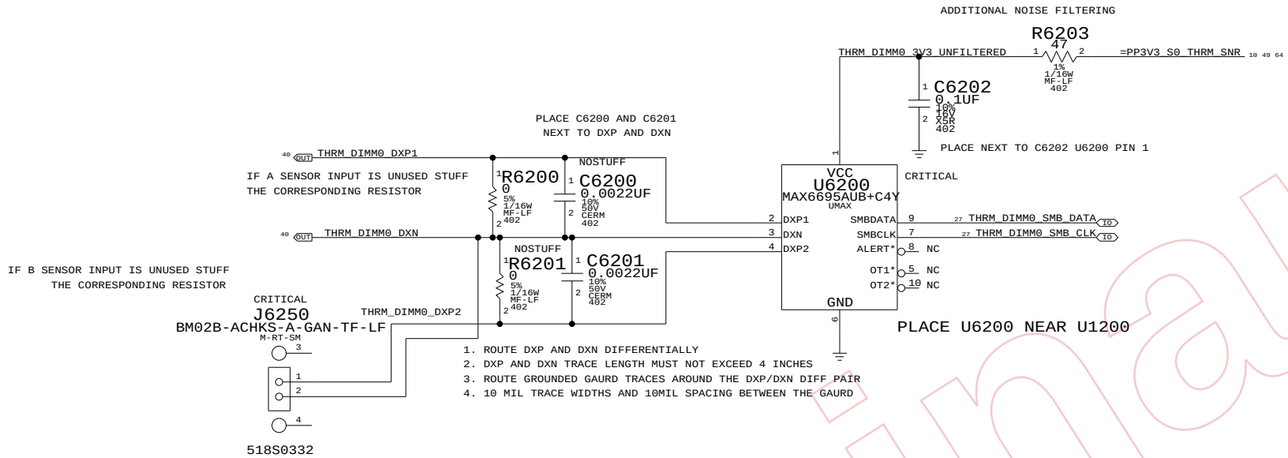

NOTE: REPLACE J6250 AND J6251 FROM 518S0332 TO 518S0452
AFTER THIS CHANGE, THE SCHEAMTIC DOES NOT MATCH THE PCB ON THESE TWO LOCATIONS.

DIMM1 TEMPERATURE ZONE

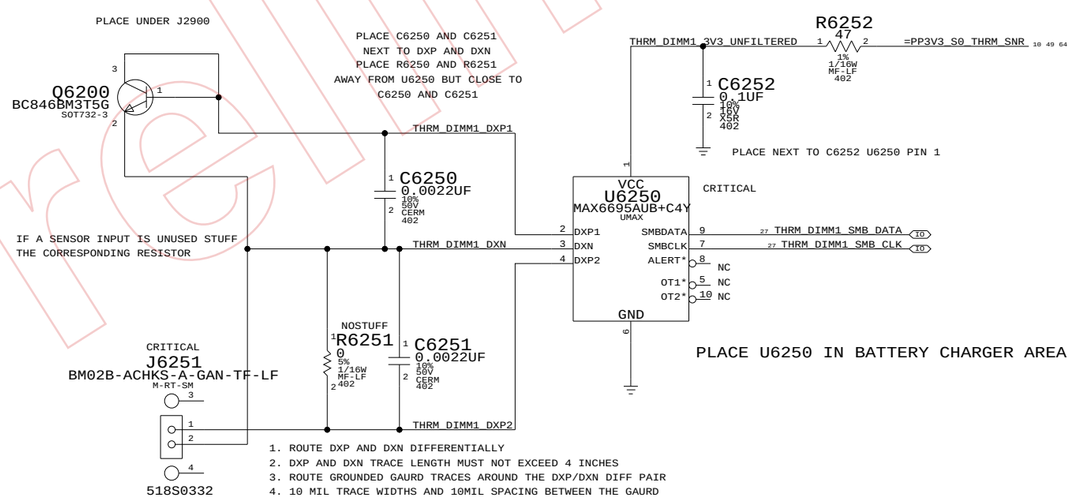

NOTE: REPLACE J6250 AND J6251 FROM 518S0332 TO 518S0452
AFTER THIS CHANGE, THE SCHEAMTIC DOES NOT MATCH THE PCB ON THESE TWO LOCATIONS.

Preliminary

TEMPERATURE SENSE

SYNC_MASTER=ENET SYNC_DATE=11/09/2005

NOTICE OF PROPRIETARY PROPERTY

THE INFORMATION CONTAINED HEREIN IS THE PROPRIETARY PROPERTY OF APPLE COMPUTER, INC. THE POSSESSOR AGREES TO THE FOLLOWING

I TO MAINTAIN THE DOCUMENT IN CONFIDENCE

II NOT TO REPRODUCE OR COPY IT

III NOT TO REVEAL OR PUBLISH IN WHOLE OR PART

APPLE COMPUTER INC.

SIZE	DRAWING NUMBER	REV.
D	051-7173	C
SCALE NONE	SHT 62 OF 108	

www.laptopblue.vn

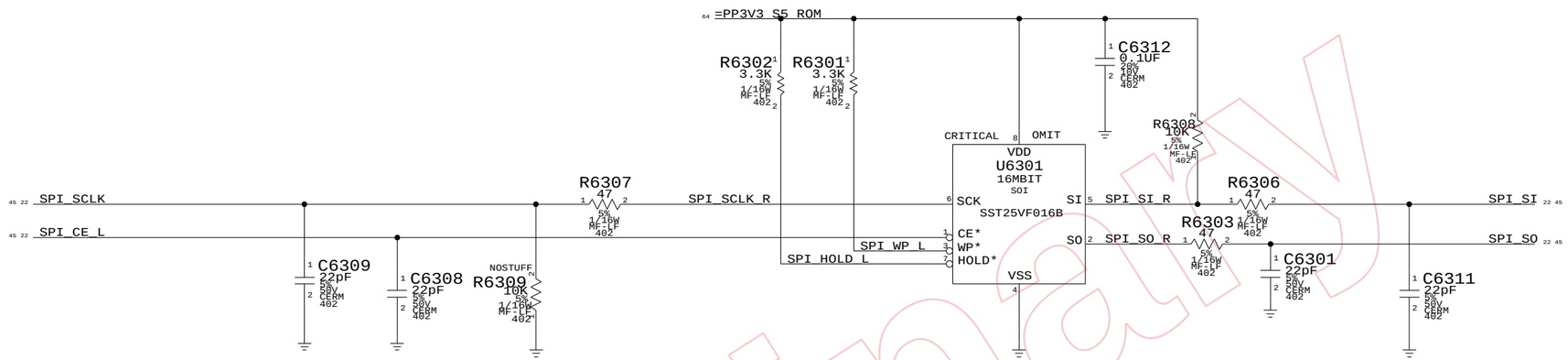

R6309 IS NOT NEEDED WHEN SHARING SPI FLASH WITH ICH7M AND TEKOA(LAN CHIP)

R6307 AND R6306 SHOULD BE PLACED LESS THAN 100 MILS FORM ICH7M

R6303 SHOULD BE PLACED LESS THAN 100 MILS FORM FLASH ROM

Preliminary

SPI BOOTROM

SYNC_MASTER=MASTER SYNC_DATE=5/23/05

NOTICE OF PROPRIETARY PROPERTY

THE INFORMATION CONTAINED HEREIN IS THE PROPRIETARY PROPERTY OF APPLE COMPUTER, INC. THE POSSESSOR AGREES TO THE FOLLOWING

I TO MAINTAIN THE DOCUMENT IN CONFIDENCE

II NOT TO REPRODUCE OR COPY IT

III NOT TO REVEAL OR PUBLISH IN WHOLE OR PART

APPLE COMPUTER INC.

SIZE	DRAWING NUMBER	REV.
D	051-7173	C
SCALE NONE	SHT 63 OF 108	

www.laptopblue.vn

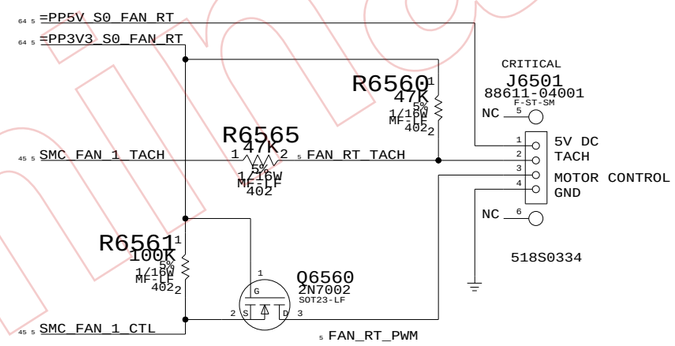

Preliminary

Fan

SYNC_MASTER=ENET SYNC_DATE=11/10/2005

NOTICE OF PROPRIETARY PROPERTY

THE INFORMATION CONTAINED HEREIN IS THE PROPRIETARY PROPERTY OF APPLE COMPUTER, INC. THE POSSESSOR AGREES TO THE FOLLOWING

I TO MAINTAIN THE DOCUMENT IN CONFIDENCE

II NOT TO REPRODUCE OR COPY IT

III NOT TO REVEAL OR PUBLISH IN WHOLE OR PART

APPLE COMPUTER INC.

SIZE	DRAWING NUMBER	REV.
D	051-7173	C
SCALE NONE	SHT 65 OF 108	

www.laptopblue.vn

PAGE NOTES

INPUT

=PP3V3_S3_SMS - 3.3V POWER FOR SMS (STAYS ALIVE IN SLEEP)
SMS_ONOFF_L - CONNECT TO SMC TO BE ABLE TO PUT SMS INTO LOW-POWER MODE

OUTPUT

SMS_ACC_*_AXIS - ACCELEROMETER OUTPUT TO SCU

PAGE HISTORY

5/19/2005 - FIRST REVISION OF PAGE
7/26/2005 - REMOVED BOM TABLE AND UPDATED SYMBOL TO KXM52-2050
7/26/2005 - CONNECTED PD PIN TO SMC'S SMS_ONOFF_L
7/28/2005 -

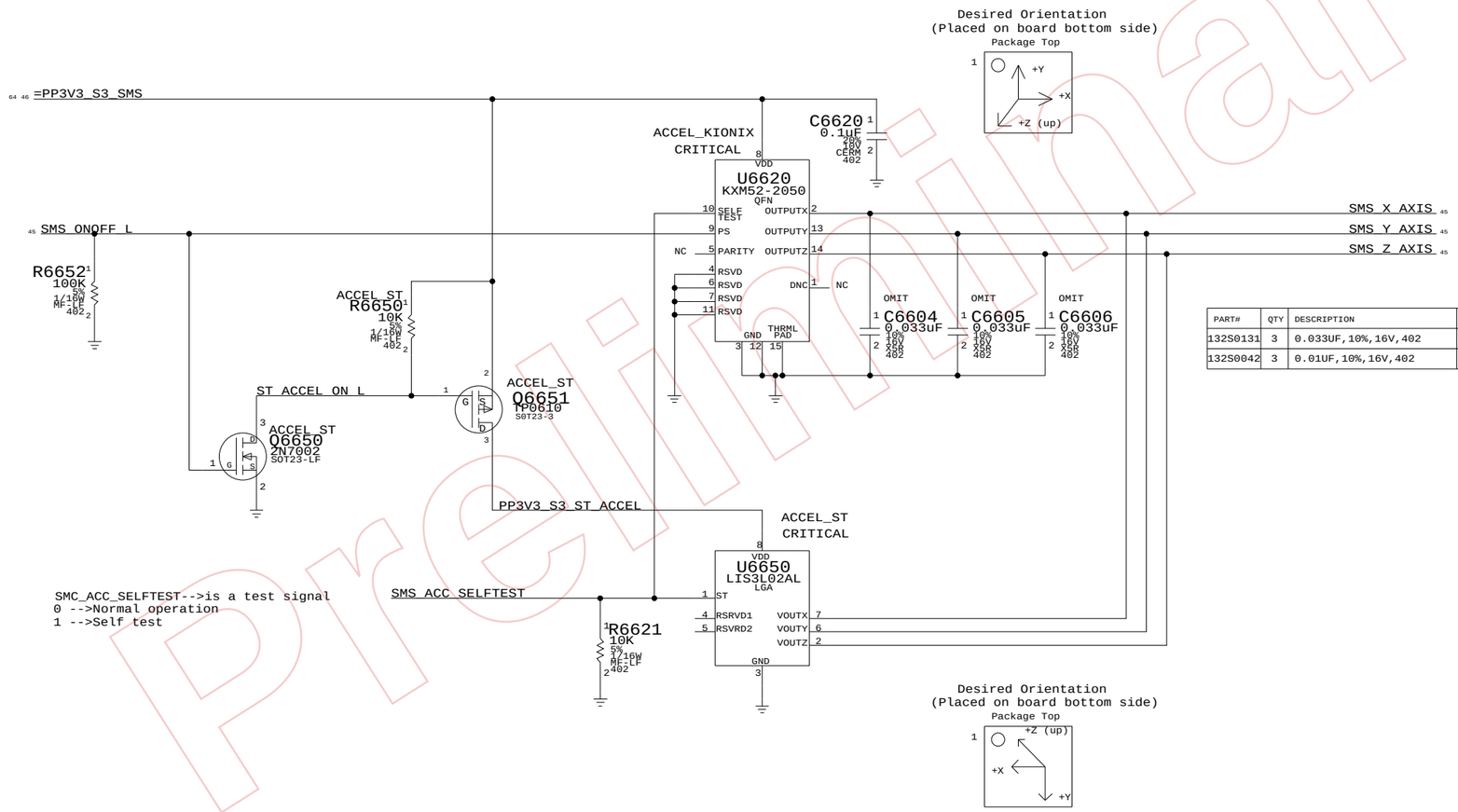

PART#	QTY	DESCRIPTION	REFERENCE DESIGNATOR(S)	CRITICAL	BOM OPTION
132S0131	3	0.033UF,10%,16V,402	C6604,C6605,C6606		ACCEL_KIONIX
132S0042	3	0.01UF,10%,16V,402	C6604,C6605,C6606		ACCEL_ST

Preliminary

SMS

SYNC_MASTER=SMC SYNC_DATE=08/23/2005

NOTICE OF PROPRIETARY PROPERTY

THE INFORMATION CONTAINED HEREIN IS THE PROPRIETARY PROPERTY OF APPLE COMPUTER, INC. THE POSSESSOR AGREES TO THE FOLLOWING

I TO MAINTAIN THE DOCUMENT IN CONFIDENCE
II NOT TO REPRODUCE OR COPY IT
III NOT TO REVEAL OR PUBLISH IN WHOLE OR PART

APPLE COMPUTER INC.

SIZE	DRAWING NUMBER	REV.
D	051-7173	C

SCALE NONE SHT 66 OF 108

www.laptopblue.vn

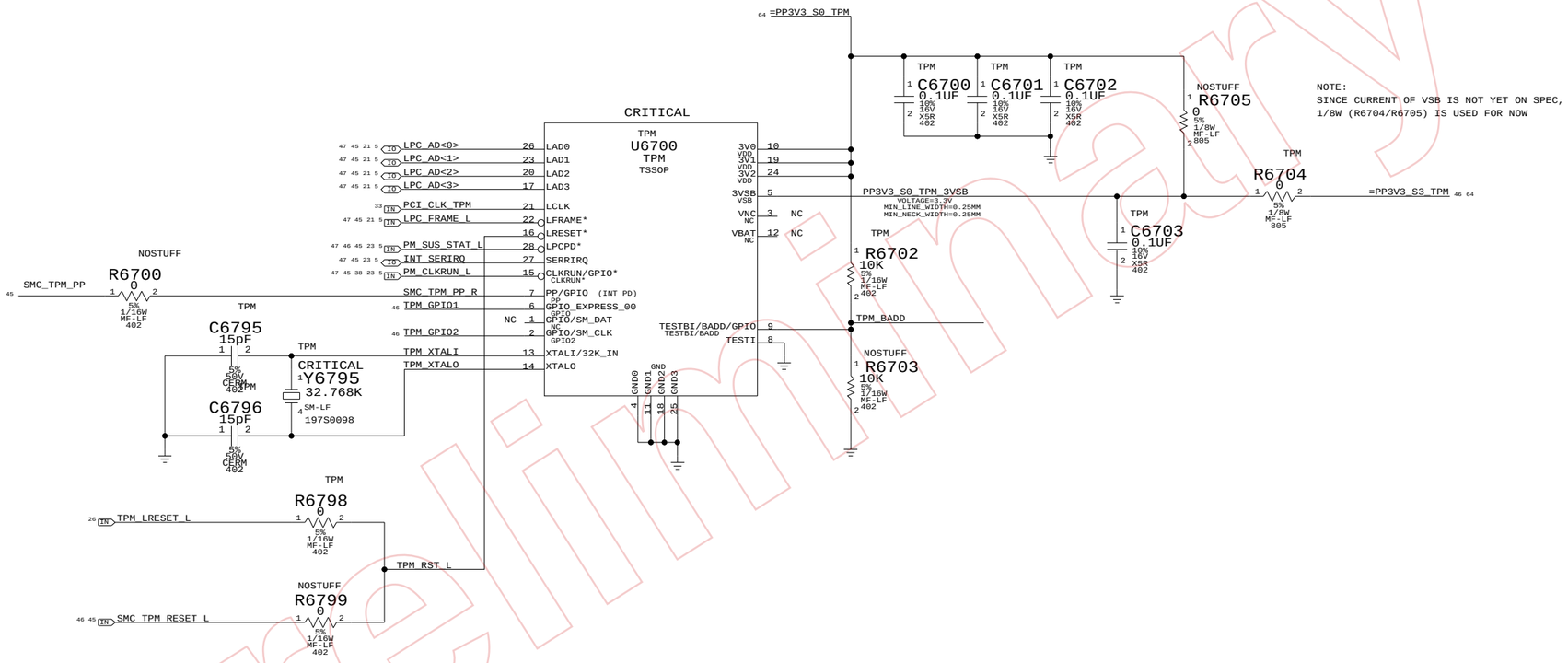

Preliminary

TPM

SYNC_MASTER=SMC SYNC_DATE=07/18/2005

NOTICE OF PROPRIETARY PROPERTY

THE INFORMATION CONTAINED HEREIN IS THE PROPRIETARY PROPERTY OF APPLE COMPUTER, INC. THE POSSESSOR AGREES TO THE FOLLOWING

I TO MAINTAIN THE DOCUMENT IN CONFIDENCE

II NOT TO REPRODUCE OR COPY IT

III NOT TO REVEAL OR PUBLISH IN WHOLE OR PART

APPLE COMPUTER INC.

SIZE	DRAWING NUMBER	REV.
D	051-7173	C
SCALE NONE	SHT 67 OF 108	

www.laptopblue.vn

AUDIO CODEC

APPLE P/N 353S1458

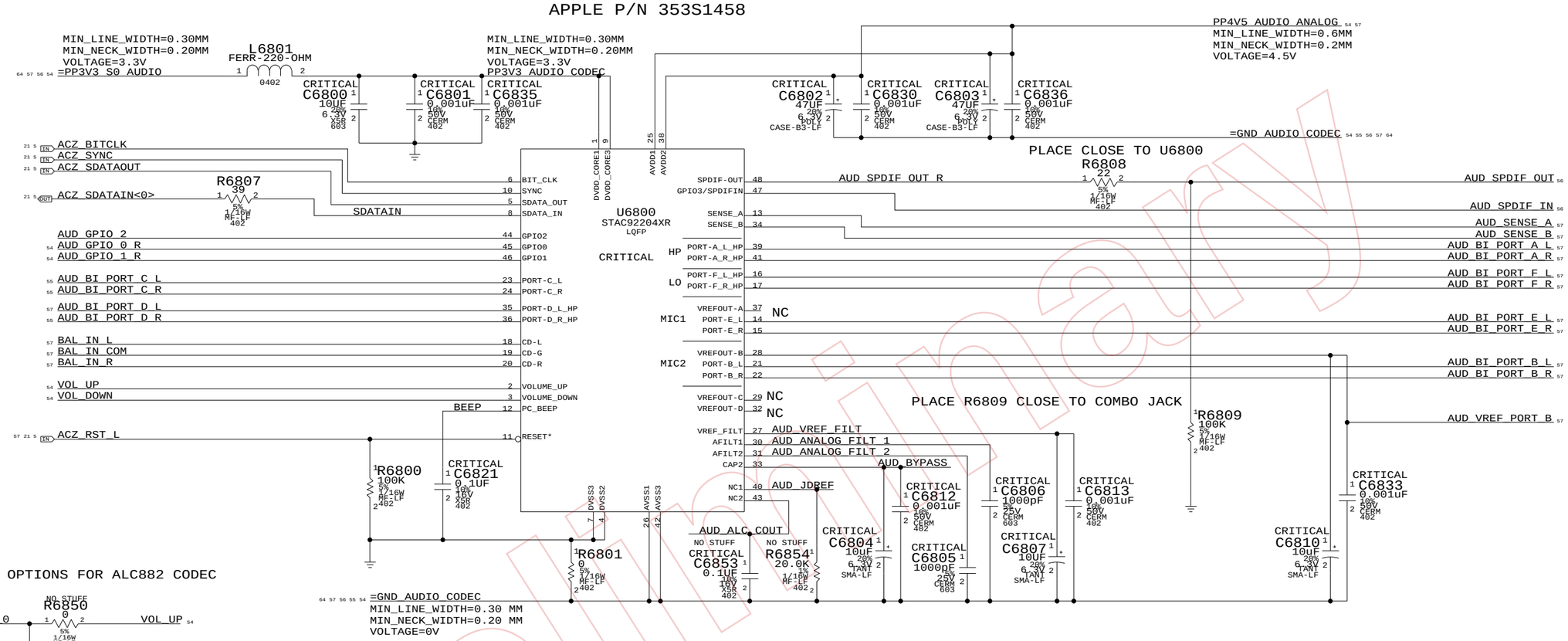

STUFFING OPTIONS FOR ALC882 CODEC

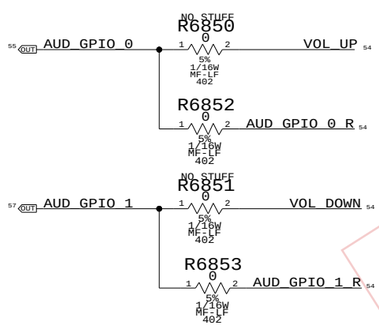

USING DC OFFSET SCREENED PART AS PRIMARY OPTION

PART NUMBER	ALTERNATE FOR PART NUMBER	BOM OPTION	REF DES	COMMENTS:
353S1345	353S1458	?	U6800	DC OFFSET SCREEN PRTS

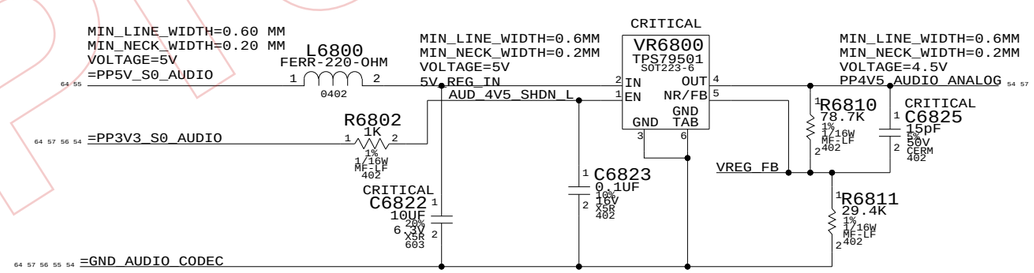

4.5V POWER SUPPLY FOR CODEC

AUDIO: CODEC

SYNC_MASTER=M42AUDIO SYNC_DATE=08/05/2006

NOTICE OF PROPRIETARY PROPERTY

THE INFORMATION CONTAINED HEREIN IS THE PROPRIETARY PROPERTY OF APPLE COMPUTER, INC. THE POSSESSOR AGREES TO THE FOLLOWING

I TO MAINTAIN THE DOCUMENT IN CONFIDENCE

II NOT TO REPRODUCE OR COPY IT

III NOT TO REVEAL OR PUBLISH IN WHOLE OR PART

APPLE COMPUTER INC.

SIZE	DRAWING NUMBER	REV.
D	051-7173	C
SCALE NONE	SHT 68 OF 108	

Preliminary

www.laptopblue.vn

SATELLITE & SUB TWEETER AMPLIFIER APN:353S1595

SATELLITE 442 Hz < FC < 736 Hz
SUB 169 Hz < FC < 282 Hz

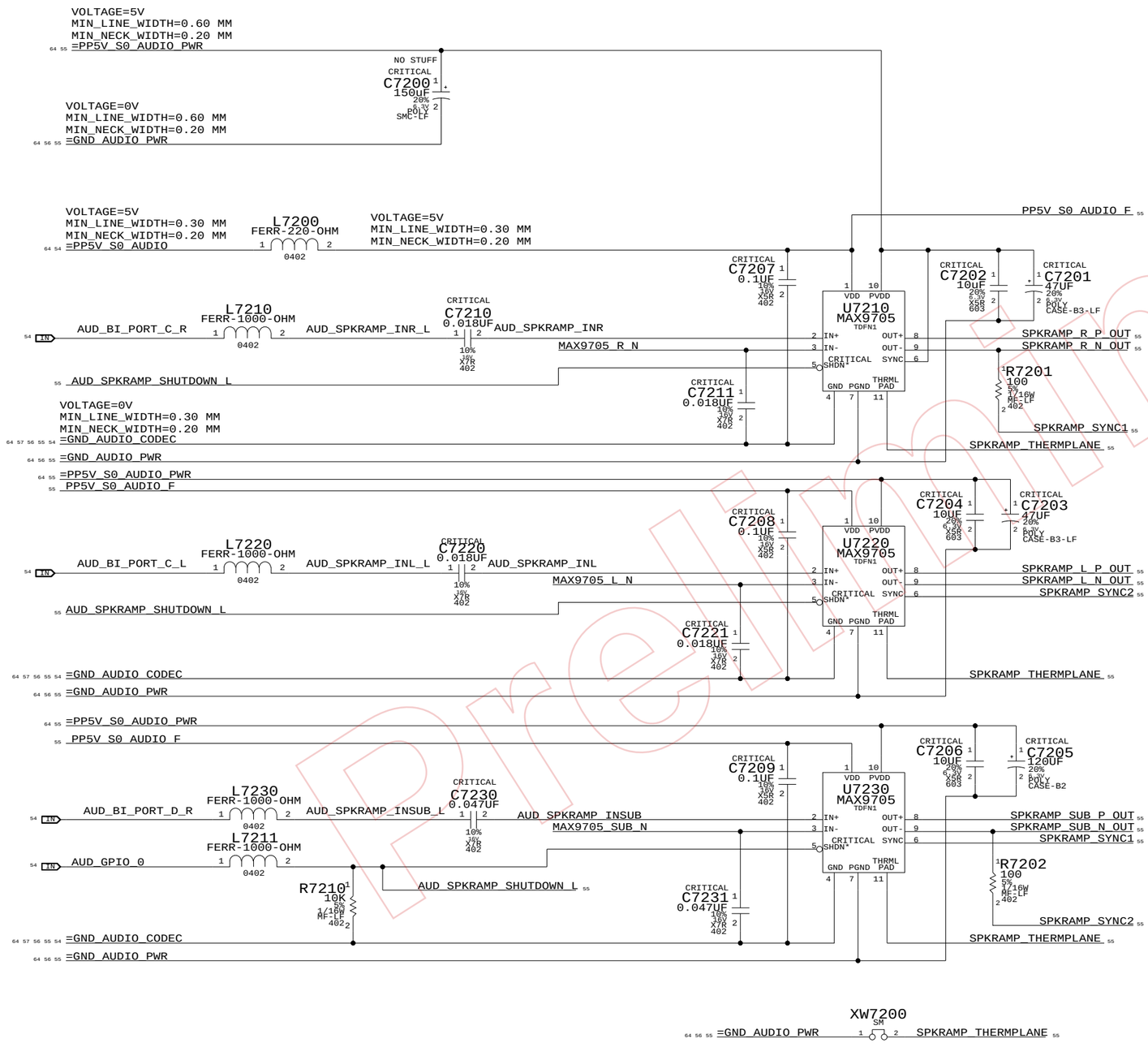

SPEAKER OUTPUT EMI FILTERS

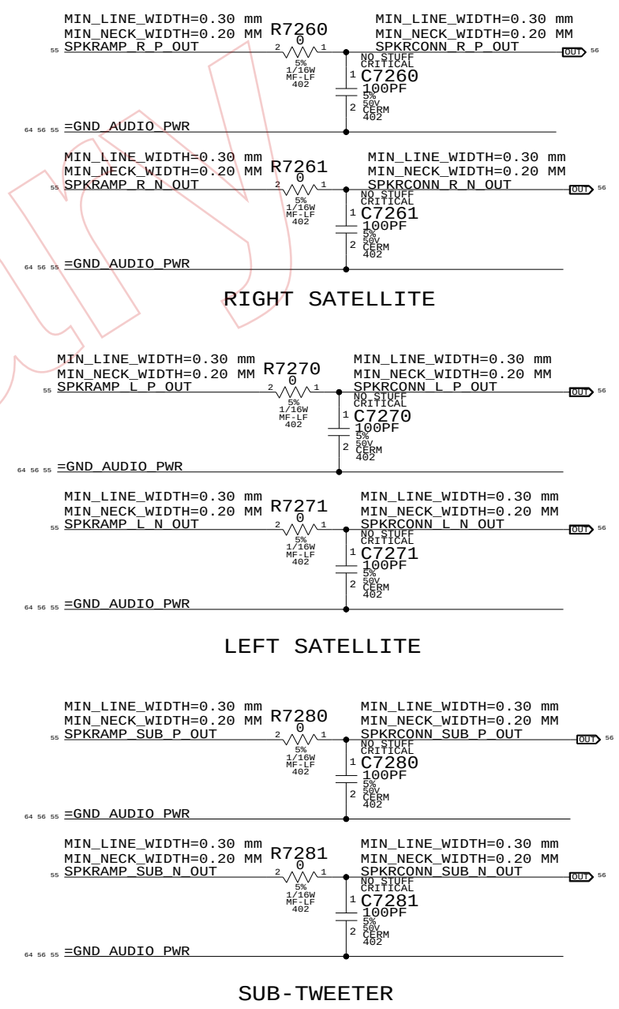

AUDIO: SPEAKER AMP

SYNC_MASTER=M42AUDIO SYNC_DATE=08/05/2006

NOTICE OF PROPRIETARY PROPERTY

THE INFORMATION CONTAINED HEREIN IS THE PROPRIETARY PROPERTY OF APPLE COMPUTER, INC. THE POSSESSOR AGREES TO THE FOLLOWING

I TO MAINTAIN THE DOCUMENT IN CONFIDENCE
II NOT TO REPRODUCE OR COPY IT
III NOT TO REVEAL OR PUBLISH IN WHOLE OR PART

APPLE COMPUTER INC.

SIZE	DRAWING NUMBER	REV.
D	051-7173	C
SCALE NONE	SHT 72 OF 108	

Preliminary

www.laptopblue.vn

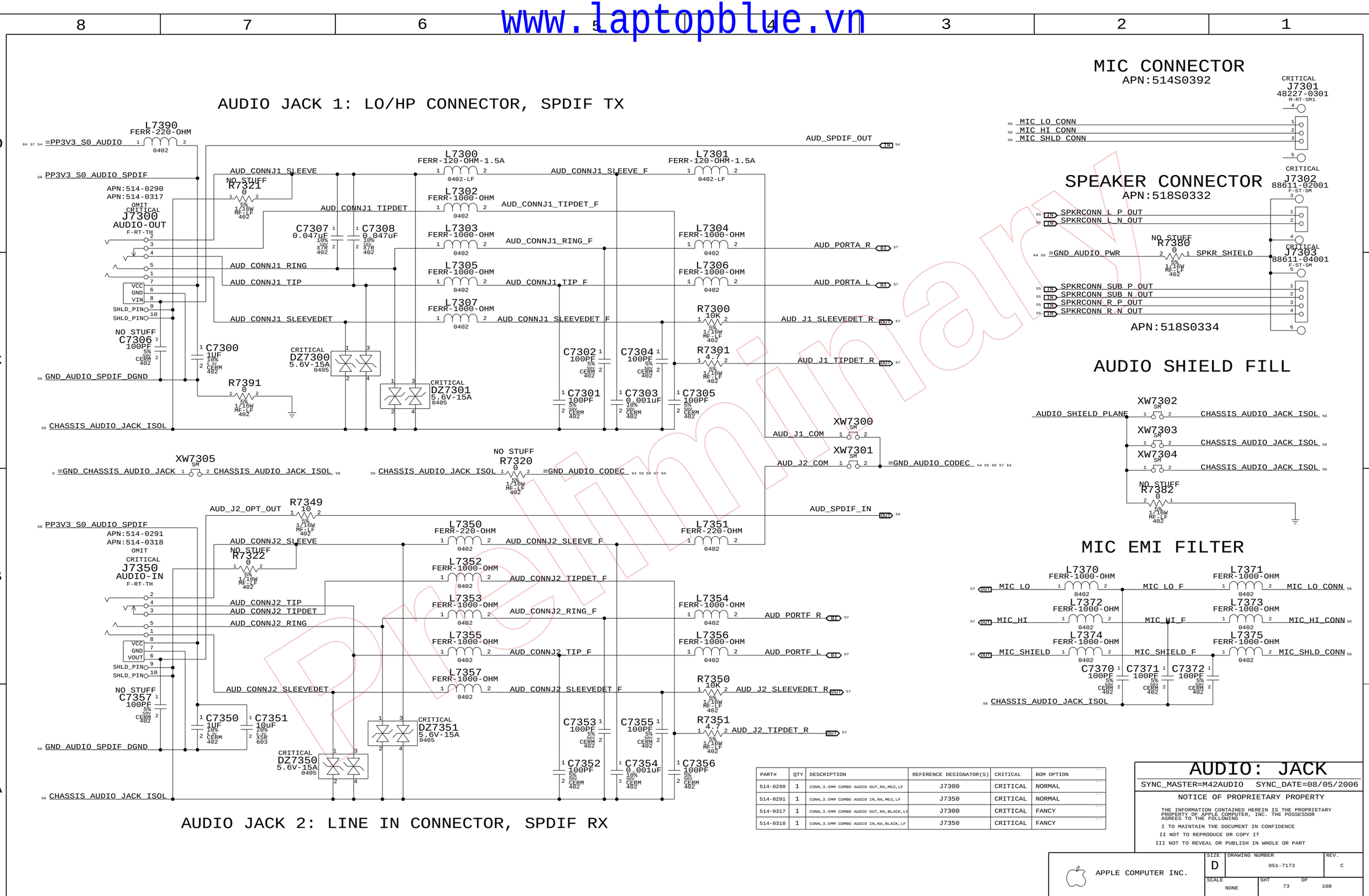

PART#	QTY	DESCRIPTION	REFERENCE DESIGNATOR(S)	CRITICAL	BOM OPTION
514-0290	1	CONN,3.5MM COMBO AUDIO OUT,RA,MG3,LF	J7300	CRITICAL	NORMAL
514-0291	1	CONN,3.5MM COMBO AUDIO IN,RA,MG3,LF	J7350	CRITICAL	NORMAL
514-0317	1	CONN,3.5MM COMBO AUDIO OUT,RA,BLACK,LF	J7300	CRITICAL	FANCY
514-0318	1	CONN,3.5MM COMBO AUDIO IN,RA,BLACK,LF	J7350	CRITICAL	FANCY

AUDIO: JACK

SYNC_MASTER=M42AUDIO SYNC_DATE=08/05/2006

NOTICE OF PROPRIETARY PROPERTY

THE INFORMATION CONTAINED HEREIN IS THE PROPRIETARY PROPERTY OF APPLE COMPUTER, INC. THE POSSESSOR AGREES TO THE FOLLOWING

I TO MAINTAIN THE DOCUMENT IN CONFIDENCE

II NOT TO REPRODUCE OR COPY IT

III NOT TO REVEAL OR PUBLISH IN WHOLE OR PART

APPLE COMPUTER INC.

SIZE	DRAWING NUMBER	REV.
D	051-7173	C
SCALE NONE	SHT 73 OF 108	

www.laptopblue.vn

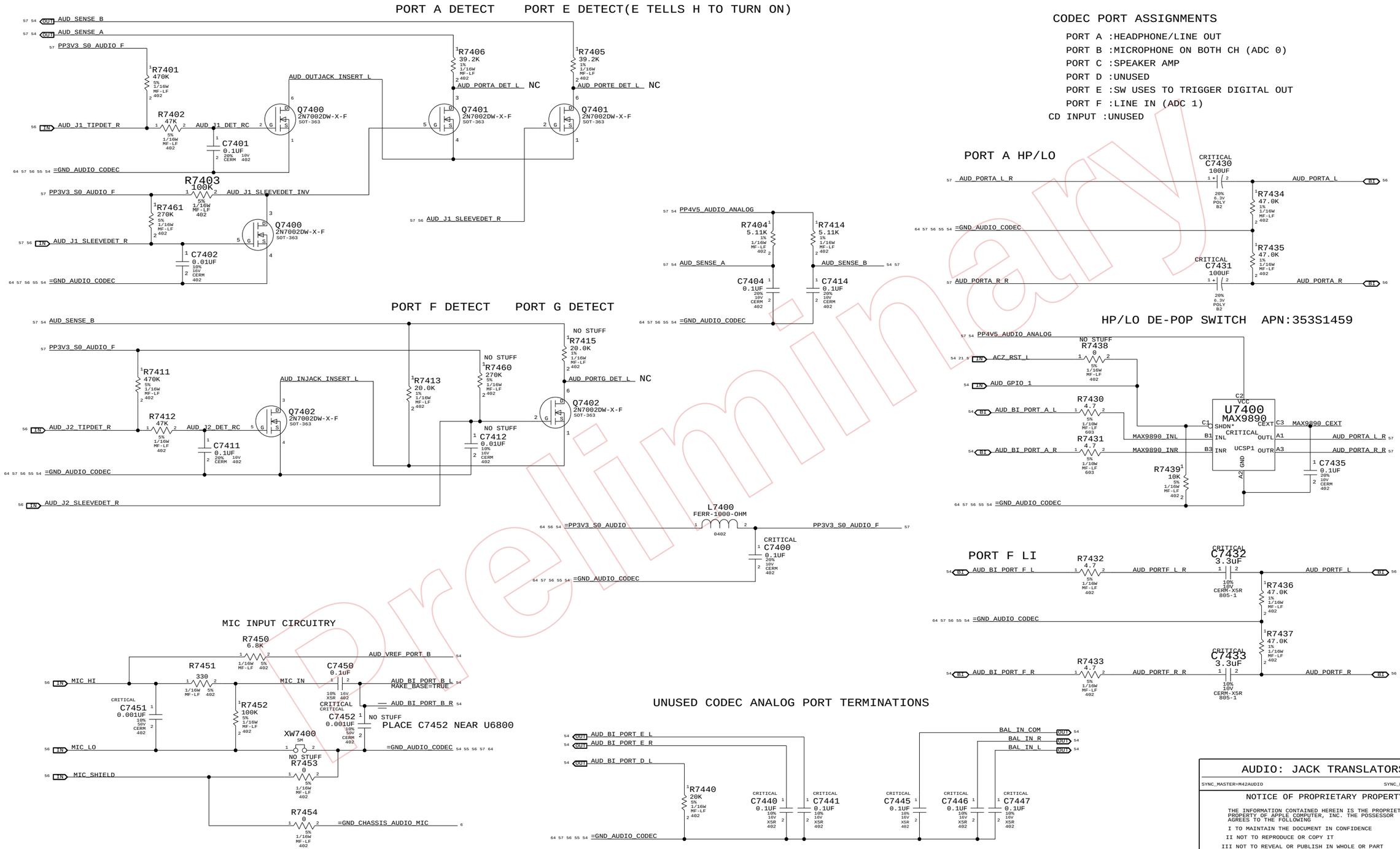

Preliminary

www.laptopblue.vn

PART NUMBER	ALTERNATE FOR PART NUMBER	BOM OPTION	REF DES	COMMENTS:
128S0093	128S0092	?	C7501,C7508	KEMET T520V336M016ATE0457650
128S0093	128S0092	?	C7509,C7517	KEMET T520V336M016ATE0457650

DPRSLPVR	DPRSTP*	PSI*	Operation Mode
0	1	1	2-Phase CCM
0	1	0	1-Phase CCM
1	0	1	1-Phase DCM
1	0	0	1-Phase DCM

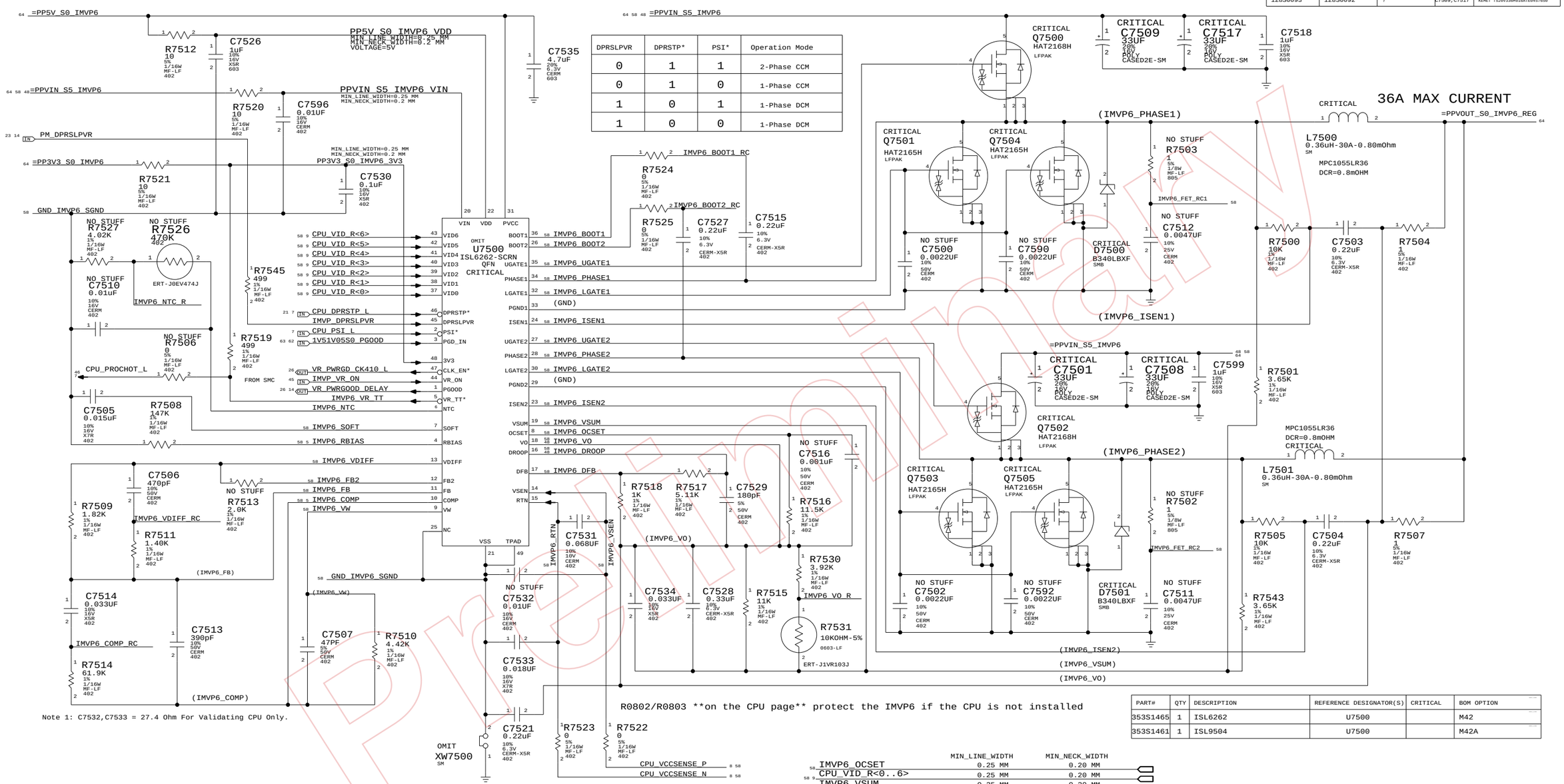

Note 1: C7532,C7533 = 27.4 Ohm For Validating CPU Only.

R0802/R0803 **on the CPU page** protect the IMVP6 if the CPU is not installed

PART#	QTY	DESCRIPTION	REFERENCE DESIGNATOR(S)	CRITICAL	BOM OPTION
353S1465	1	ISL6262	U7500		M42
353S1461	1	ISL9504	U7500		M42A

IMVP6 CPU VCORE REGULATOR

	MIN_LINE_WIDTH	MIN_NECK_WIDTH
IMVP6_PHASE1	1.5 MM	0.25 MM
IMVP6_BOOT1	0.25 MM	0.25 MM
IMVP6_UGATE1	1.5 MM	0.25 MM
IMVP6_LGATE1	1.5 MM	0.25 MM
IMVP6_ISEN1	0.25 MM	0.25 MM
IMVP6_FET_RC1	0.25 MM	0.25 MM
IMVP6_VSUM_R1	0.25 MM	0.25 MM
IMVP6_VO_R1	0.25 MM	0.25 MM

	MIN_LINE_WIDTH	MIN_NECK_WIDTH
IMVP6_PHASE2	0.25 MM	0.25 MM
IMVP6_BOOT2	0.25 MM	0.25 MM
IMVP6_UGATE2	0.25 MM	0.25 MM
IMVP6_LGATE2	0.25 MM	0.25 MM
IMVP6_ISEN2	0.25 MM	0.25 MM
IMVP6_FET_RC2	0.25 MM	0.25 MM
IMVP6_VSUM_R2	0.25 MM	0.25 MM
IMVP6_VO_R2	0.25 MM	0.25 MM

	MIN_LINE_WIDTH	MIN_NECK_WIDTH
IMVP6_OCSET	0.25 MM	0.20 MM
CPU_VID_R<0..6>	0.25 MM	0.20 MM
IMVP6_VSUM	0.25 MM	0.20 MM
GND_IMVP6_SGND	0.50 MM	0.20 MM
IMVP6_VO	0.25 MM	0.20 MM
IMVP6_DROOP	0.25 MM	0.20 MM
IMVP6_DFB	0.25 MM	0.20 MM
IMVP6_SOFT	0.25 MM	0.20 MM
IMVP6_RBIAS	0.25 MM	0.20 MM
IMVP6_VDIFF	0.25 MM	0.20 MM
IMVP6_FB2	0.25 MM	0.20 MM
IMVP6_FB	0.25 MM	0.20 MM
IMVP6_COMP	0.25 MM	0.20 MM
IMVP6_VW	0.25 MM	0.25 MM
CPU_VCCSENSE_P	0.25 MM	0.25 MM
CPU_VCCSENSE_N	0.25 MM	0.25 MM
IMVP6_RTN	0.25 MM	0.25 MM
IMVP6_VSEN	0.25 MM	0.25 MM

IMVP6 CPU VCore Regulator

SYNC_MASTER=POWER SYNC_DATE=07/13/2005

NOTICE OF PROPRIETARY PROPERTY

THE INFORMATION CONTAINED HEREIN IS THE PROPRIETARY PROPERTY OF APPLE COMPUTER, INC. THE POSSESSOR AGREES TO THE FOLLOWING

I TO MAINTAIN THE DOCUMENT IN CONFIDENCE
II NOT TO REPRODUCE OR COPY IT
III NOT TO REVEAL OR PUBLISH IN WHOLE OR PART

APPLE COMPUTER INC.

SIZE	DRAWING NUMBER	REV.
D	051-7173	C

SCALE NONE SHT 75 OF 108

www.laptopblue.vn

5V/3.3V POWER SUPPLY

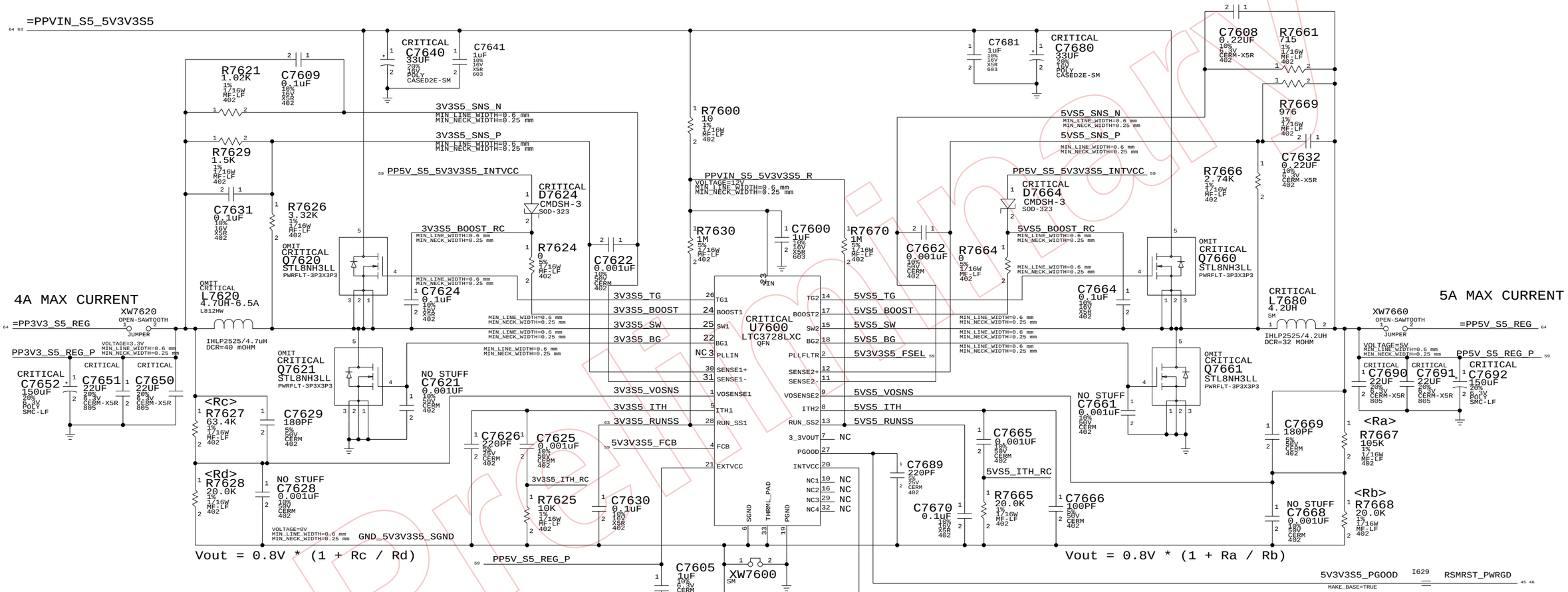

PART#	QTY	DESCRIPTION	REFERENCE DESIGNATOR(S)	BOM OPTION
152S0133	1	4.7UH,+/-20%,40mOHM,3mm	L7620	3V3_IND_3MM
152S0365	1	4.7UH,+/-20%,40mOHM,2.8mm	L7620	3V3_IND_2MM8
376S0445	4	FAIRCHILD FDM6296	Q7620,Q7621,Q7660,Q7661	FET_FDN6296

PART NUMBER	ALTERNATE FOR PART NUMBER	BOM OPTION	REF DES	COMMENTS:
128S0093	128S0092	?	C7680,C7640	KEMET T520V336M016ATE045 7650
376S0448	376S0445	?	Q7620,Q7621	VISHAY SI7806ADN
376S0448	376S0445	?	Q7660,Q7661	VISHAY SI7806ADN

5V / 3.3V Power Supply

SYNC_MASTER=POWER SYNC_DATE=07/13/2005

NOTICE OF PROPRIETARY PROPERTY

THE INFORMATION CONTAINED HEREIN IS THE PROPRIETARY PROPERTY OF APPLE COMPUTER, INC. THE POSSESSOR AGREES TO THE FOLLOWING

I TO MAINTAIN THE DOCUMENT IN CONFIDENCE

II NOT TO REPRODUCE OR COPY IT

III NOT TO REVEAL OR PUBLISH IN WHOLE OR PART

APPLE COMPUTER INC.

SIZE	DRAWING NUMBER	REV.
D	051-7173	C

SCALE NONE SHT 76 OF 108

www.laptopblue.vn

YUKON POWER CONTROL

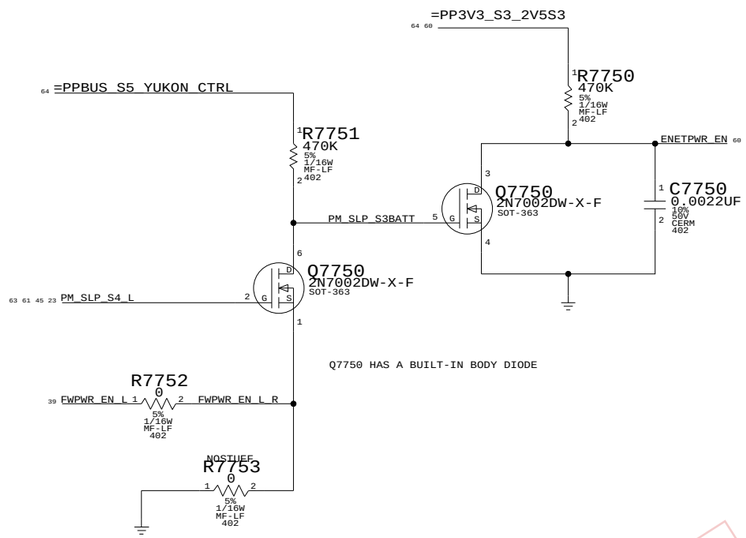

NAME	PM_SLP_S4_L	FWPWR_EN_L	PM_SLP_S3BATT	ENETPWR_EN
LOGIC	S3 | S0	~S0 | ~SMC_PS_ON		POWER YUKON
S3 ON BATTERY	TRUE (3.3V)	TRUE (PBUS 12.6V)	TRUE (PBUS 12.6V)	FALSE (0V)
S0 OR S3 ON AC	TRUE (3.3V)	FALSE (0V)	FALSE (0V)	TRUE (3.3V)
S5 ON AC	FALSE (0V)	TRUE (PBUS 12.6V)	TRUE (PBUS 12.6V)	FALSE (0V)
S5 ON BATT	FALSE (0V)	FALSE (0V)	TRUE (PBUS 12.6V)	FALSE (0V)

NOTE: IF CHANGE TO STUFFING R7753 THEN ENETPWR_EN IS BUFFERED PM_SLP_S4_L

2.5V REGULATORS

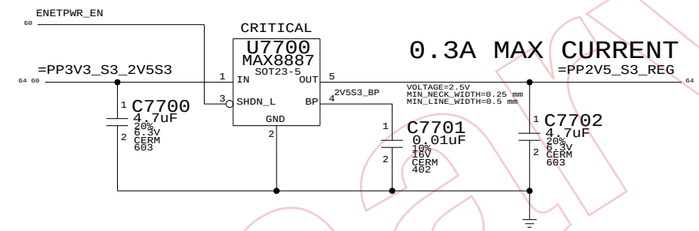

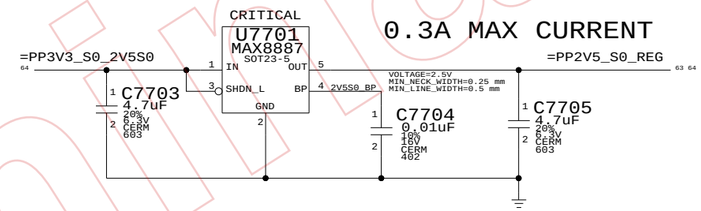

1.2V REGULATOR

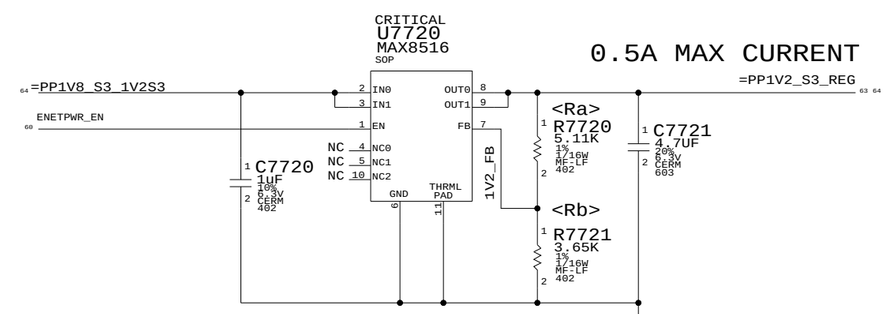

Vout = 0.5V * (1 + Ra / Rb)

Proprietary

2.5V/1.2V Regulator

SYNC_MASTER=ENET SYNC_DATE=12/06/2005

NOTICE OF PROPRIETARY PROPERTY

THE INFORMATION CONTAINED HEREIN IS THE PROPRIETARY PROPERTY OF APPLE COMPUTER, INC. THE POSSESSOR AGREES TO THE FOLLOWING

I TO MAINTAIN THE DOCUMENT IN CONFIDENCE

II NOT TO REPRODUCE OR COPY IT

III NOT TO REVEAL OR PUBLISH IN WHOLE OR PART

APPLE COMPUTER INC.

SIZE	DRAWING NUMBER	REV.
D	051-7173	C
SCALE NONE	SHT 77 OF 108	

www.laptopblue.vn

1.8V POWER SUPPLY

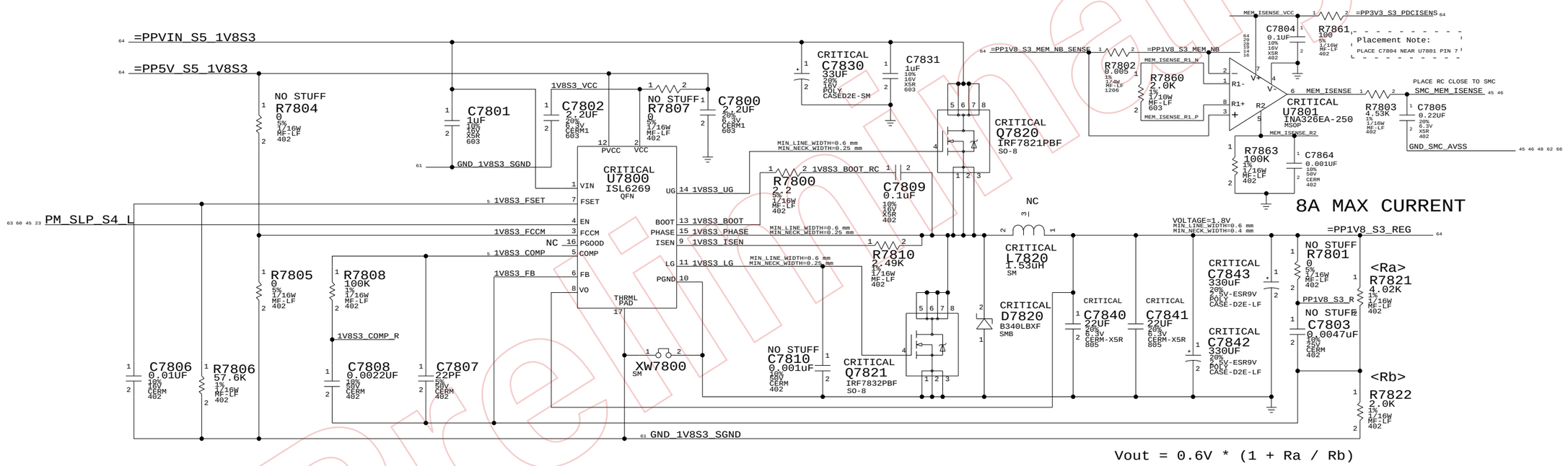

PART NUMBER	ALTERNATE FOR PART NUMBER	BOM OPTION	REF DES	COMMENTS:
128S0093	128S0092	?	C7830	KEMET T520V336M016ATE045/7650

PART NUMBER	ALTERNATE FOR PART NUMBER	BOM OPTION	REF DES	COMMENTS:
128S0094	128S0060	?	C7842,C7843	PANASONIC EEFSX0D331ER
128S0095	128S0060	?	C7842,C7843	PANASONIC EEFSX0D331XE

1.8V Supply

SYNC_MASTER=POWER SYNC_DATE=07/13/2005

NOTICE OF PROPRIETARY PROPERTY

THE INFORMATION CONTAINED HEREIN IS THE PROPRIETARY PROPERTY OF APPLE COMPUTER, INC. THE POSSESSOR AGREES TO THE FOLLOWING

I TO MAINTAIN THE DOCUMENT IN CONFIDENCE

II NOT TO REPRODUCE OR COPY IT

III NOT TO REVEAL OR PUBLISH IN WHOLE OR PART

APPLE COMPUTER INC.

SIZE	DRAWING NUMBER	REV.
D	051-7173	C

SCALE NONE SHT 78 OF 108

Preliminary

www.laptopblue.vn

1.5V/1.05V POWER SUPPLY

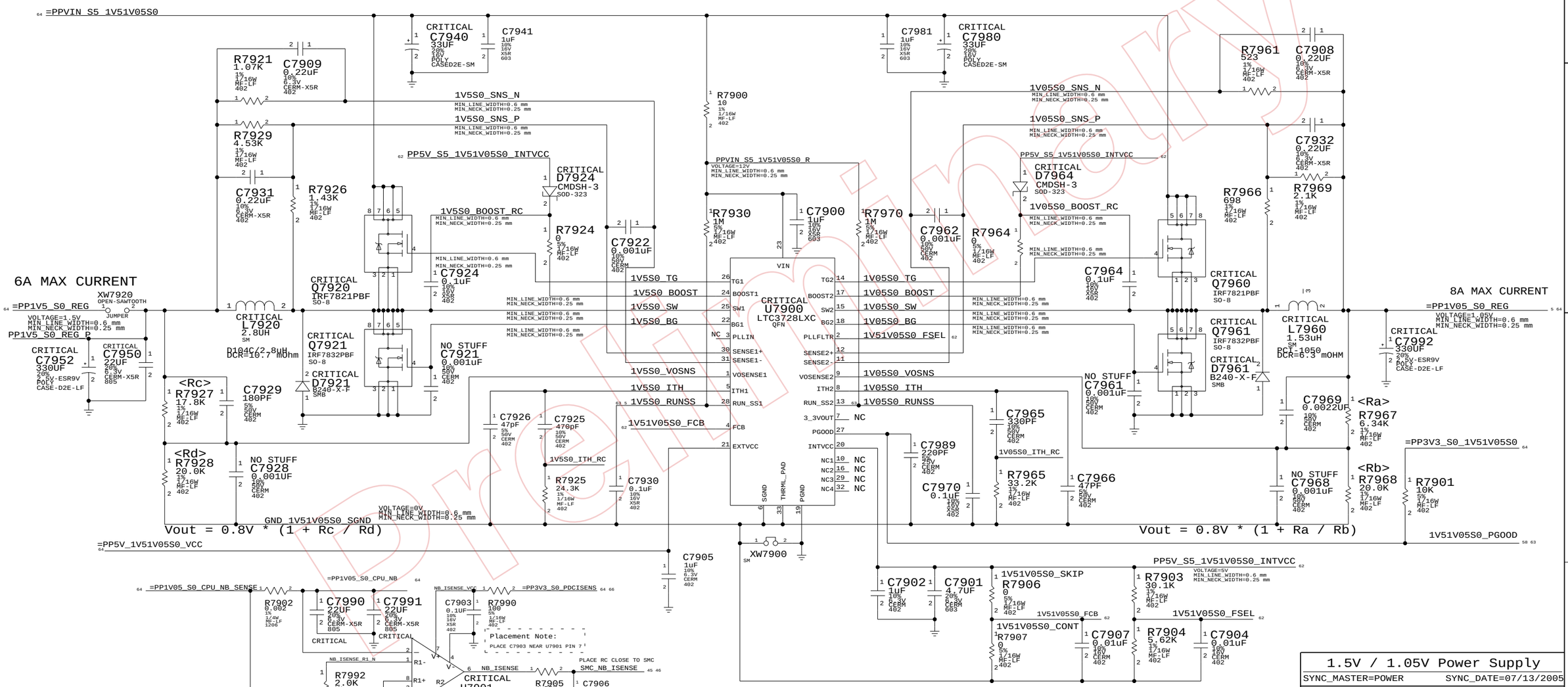

PART NUMBER	ALTERNATE FOR PART NUMBER	BOM OPTION	REF DES	COMMENTS:
128S0093	128S0092	?	C7980,C7940	KEMET T520V336M016ATE0457650

PART NUMBER	ALTERNATE FOR PART NUMBER	BOM OPTION	REF DES	COMMENTS:
128S0094	128S0060	?	C7952,C7992	PANASONIC EEFSX0D331ER
128S0095	128S0060	?	C7952,C7992	PANASONIC EEFSX0D331XE

1.5V / 1.05V Power Supply

SYNC_MASTER=POWER SYNC_DATE=07/13/2005

NOTICE OF PROPRIETARY PROPERTY

THE INFORMATION CONTAINED HEREIN IS THE PROPRIETARY PROPERTY OF APPLE COMPUTER, INC. THE POSSESSOR AGREES TO THE FOLLOWING

I TO MAINTAIN THE DOCUMENT IN CONFIDENCE

II NOT TO REPRODUCE OR COPY IT

III NOT TO REVEAL OR PUBLISH IN WHOLE OR PART

APPLE COMPUTER INC.

SIZE	DRAWING NUMBER	REV.
D	051-7173	C
SCALE NONE	SHT 79 OF 108	

www.laptopblue.vn

POWER CONTROL SIGNALS

These rails are monitored by LTC2908

State	SMC_PM_G2_ENABLE	PM_SLP_S4_L	PM_SLP_S3_L
Run (S0)	1	1	1
Sleep (S3)	1	1	0
Soft-Off (S5)	1	0	0
Battery Off (G3Hot)	0	0	0

5V/3.3V S5 RUN/SS CONTROL

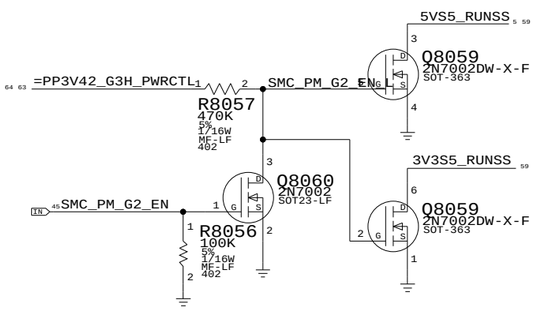

1.5V/1.05V S0 RUN/SS CONTROL

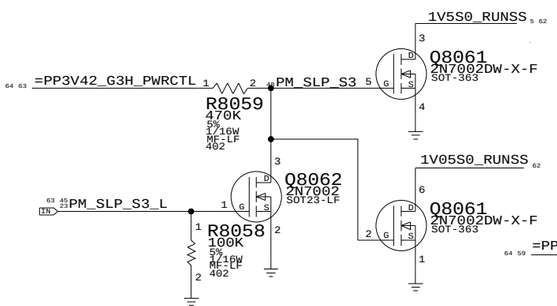

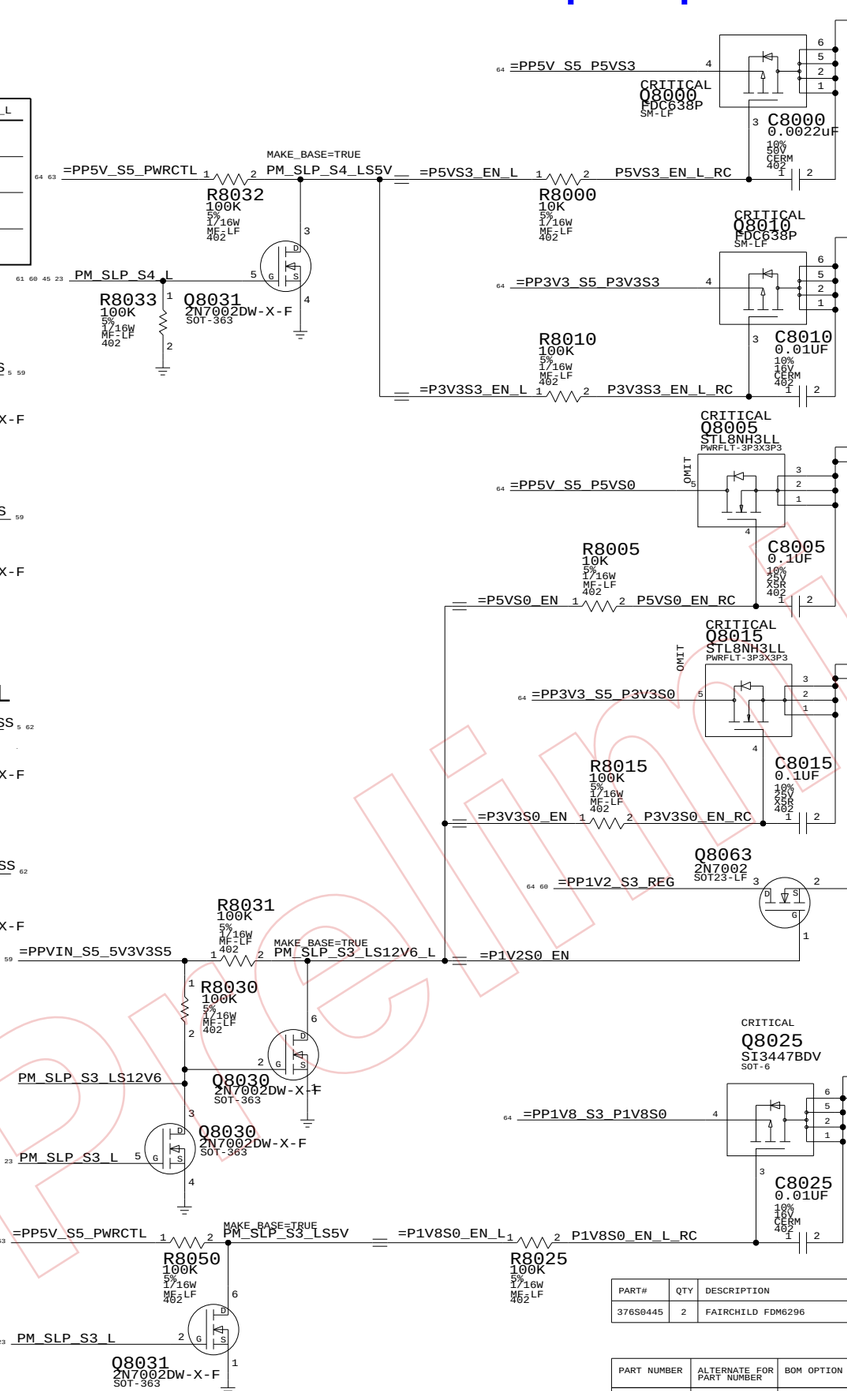

5V S3 FET

MOSFET	FDC638P
CHANNEL	P-TYPE
RDS(ON)	48 mOhm @4.5V
LOADING	100 mA

3.3V S3 FET

MOSFET	FDC638P
CHANNEL	P-TYPE
RDS(ON)	65 mOhm @2.5V
LOADING	1 A

5V S0 FET

MOSFET	STL8NH3LL
CHANNEL	N-TYPE
RDS(ON)	15 mOhm @10V
LOADING	3 A

3.3V S0 FET

MOSFET	STL8NH3LL
CHANNEL	N-TYPE
RDS(ON)	15 mOhm @10V
LOADING	2 A

1.2V S0 FET

MOSFET	2N7002
CHANNEL	N-TYPE
RDS(ON)	13.5 Ohm
LOADING	Nothing

1.8V S0 FET

MOSFET	SI3447BDV
CHANNEL	P-TYPE
RDS(ON)	72 mOhm @1.8V
LOADING	320 mA

3.425V "G3Hot" SUPPLY

Supply needs to guarantee 3.31V delivered to SMC VRef generator

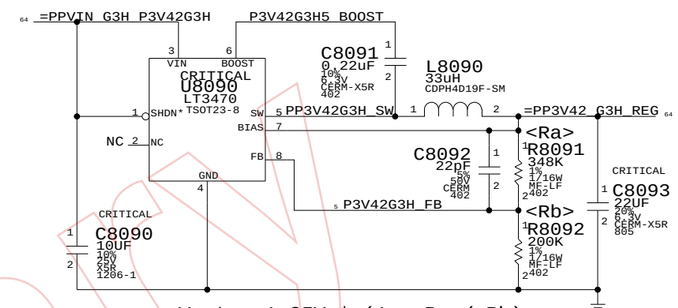

Vout = 1.25V * (1 + Ra / Rb)

ALL SYSTEM PWRGD CIRCUIT

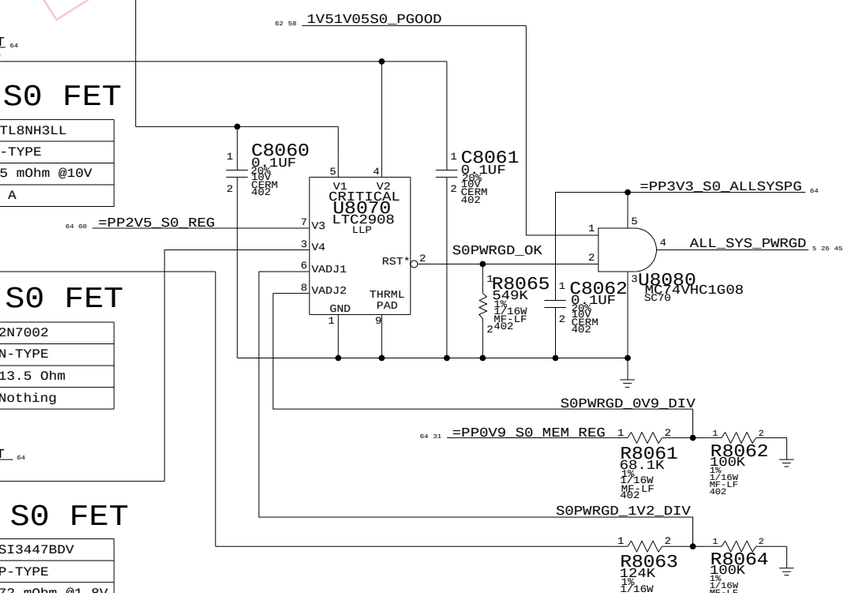

PART#	QTY	DESCRIPTION	REFERENCE DESIGNATOR(S)	BOM OPTION
376S0445	2	FAIRCHILD FDM6296	Q8005,Q8015	FET_FDN6296

PART NUMBER	ALTERNATE FOR PART NUMBER	BOM OPTION	REF DES	COMMENTS:
376S0448	376S0445	?	Q8005,Q8015	VISHAY SI7806ADN

S3/S0 FETS, G3H SUPPLY

SYNC_MASTER=ENET SYNC_DATE=08/30/2005

NOTICE OF PROPRIETARY PROPERTY

THE INFORMATION CONTAINED HEREIN IS THE PROPRIETARY PROPERTY OF APPLE COMPUTER, INC. THE POSSESSOR AGREES TO THE FOLLOWING

I TO MAINTAIN THE DOCUMENT IN CONFIDENCE

II NOT TO REPRODUCE OR COPY IT

III NOT TO REVEAL OR PUBLISH IN WHOLE OR PART

APPLE COMPUTER INC.

SIZE	DRAWING NUMBER	REV.
D	051-7173	C

SCALE NONE SHT 80 OF 108

Preliminary

www.laptopblue.vn

"S0" RAILS
ONLY ON IN RUN

PPVCORE_CPU_S0
MAKE_BASE=TRUE
MIN_LINE_WIDTH=0.5MM
MIN_NECK_WIDTH=0.4MM
VOLTAGE=0.9V

(REGULATOR OUTPUT CPU VCORE PWR) 58 =PPVOUT_S0_IMVP6_REG
(CPU VCORE PWR) =PPVCORE_S0_CPU 8 9 48

PP0V9_S0
MAKE_BASE=TRUE
MIN_LINE_WIDTH=0.5MM
MIN_NECK_WIDTH=0.4MM
VOLTAGE=0.9V

(LDO OUTPUT 0.9V PWR) 63 31 =PP0V9_S0_MEM_REG
(DDR2 TERMINATION 0.9V PWR) =PP0V9_S0_MEM_TERM 30

PP1V05_S0
MAKE_BASE=TRUE
MIN_LINE_WIDTH=0.6MM
MIN_NECK_WIDTH=0.4MM
VOLTAGE=1.05V

(REGULATOR OUTPUT 1.05V PWR) 62 5 =PP1V05_S0_REG
(ICH CPU I/O 1.05V PWR) =PP1V05_S0_SB_CPU_IO 21 24 25
(ICH VCORE 1.05V PWR) =PPVCORE_S0_SB 24 25
=PP1V05_S0_CPU_NB_SENSE 62

PP1V05_S0_CPU_NB
MAKE_BASE=TRUE
MIN_LINE_WIDTH=0.6MM
MIN_NECK_WIDTH=0.4MM
VOLTAGE=1.05V

62 =PP1V05_S0_CPU_NB
(MCH CORE 1.05V PWR) =PPVCORE_S0_NB 16 19
(CPU FSB 1.05V PWR) =PP1V05_S0_CPU 7 8 9 11
(MCH FSB 1.05V PWR) =PP1V05_S0_FSB_NB 12 19 33
=PP1V05_S0_NB_VTT 17 19
(MCH FSB 1.05V PWR) =PP1V05_S0_NB 19

PP1V5_S0
MAKE_BASE=TRUE
MIN_LINE_WIDTH=0.6MM
MIN_NECK_WIDTH=0.4MM
VOLTAGE=1.5V

(REGULATOR OUTPUT 1.5V PWR) 62 =PP1V5_S0_REG
(CPU AVDD 1.5V PWR) =PP1V5_S0_CPU 8 9
(MCH PCIE GRAPHICS O/P COMPENSATION 1.5V PWR) =PP1V5_S0_NB_PCIE 13 19
(MCH DDR DLL&IO, FSB HSIO&IO PWR 1.5V) =PP1V5_S0_NB_VCCAUX 16 17 19
(MCH DIGITAL DIVIDER IN HMPLL 1.5V PWR) =PP1V5_S0_NB_VCCD_HMPLL 17 19
(MCH LVDS DIGITAL 1.5V PWR) =PP1V5_S0_NB_VCCD_LVDS 17 19
(HOST/MEMORY PLL 1.5V PWR) =PP1V5_S0_NB_PLL 19
=PP1V5_S0_NB 19
(MCH TVDAC DEDICATED/QUIET PWR 1.5V) =PP1V5_S0_NB_TVDAC 19
(MCH 3GIO[PCIE/DMI] 1.5V PWR) =PP1V5_S0_NB_3G 19
(MCH 3GIO PLL 1.5V PWR) =PP1V5_S0_NB_3GPLL 19
(ICH LOGIC&IO[ARX] 1.5V PWR) =PP1V5_S0_SB_VCC1_5_A_ARX 24 25
(ICH SATA PLL 1.5V PWR) =PP1V5_S0_SB_VCCSATAPLL 24 25
(ICH LOGIC&IO[ATX] 1.5V PWR) =PP1V5_S0_SB_VCC1_5_A_ATX 24 25
(ICH USB PLL 1.5V PWR) =PP1V5_S0_SB_VCCUSBPLL 24 25
(ICH USB CORE 1.5V PWR) =PP1V5_S0_SB_VCC1_5_A_USB_CORE 24 25
(ICH LOGIC&IO 1.5V PWR) =PP1V5_S0_SB_VCC1_5_A 24 25
=PP1V5_S0_SB 25
(WIRELESS CARD 1.5V PWR) =PP1V5_S0_AIRPORT 43

PP1V8_S0
MAKE_BASE=TRUE
MIN_LINE_WIDTH=0.6MM
MIN_NECK_WIDTH=0.4MM
VOLTAGE=1.8V

(COME FROM S3 TO S0 MOSFET) 63 =PP1V8_S0_FET
(DDR2 TERMINATION REGULATOR 1.8V SWITCH PWR)
(TMDS 1.8V PWR) =PP1V8_S0_TMDS 68

PP2V5_S0
MAKE_BASE=TRUE
MIN_LINE_WIDTH=0.5 mm
MIN_NECK_WIDTH=0.25 mm
VOLTAGE=2.5V

(COME FROM S3 TO S0 MOSFET) 63 60 =PP2V5_S0_REG
(MCH H/V SYNC 2.5V PWR) =PP2V5_S0_NB_VCCSYNC 17 19
(MCH LVDS DATA/CLK TX 2.5V PWR) =PP2V5_S0_NB_VCC_TXLVDS 17 19
(MCH PCIE/DMI BAND GAP 2.5V PWR) =PP2V5_S0_NB_VCCA_3GBG 17 19
(MCH LVDS ANALOG 2.5V PWR) =PP2V5_S0_NB_VCCA_LVDS 17 19
(MCH CRTDAC ANALOG 2.5V PWR) =PP2V5_S0_NB_CRTDAC 19
(TMDS 2.5V PWR) =PP2V5_S0_TMDS 68
=PP2V5_S0_NB_DISP_PLL 19

PP3V3_S0
MAKE_BASE=TRUE
MIN_LINE_WIDTH=0.30MM
MIN_NECK_WIDTH=0.20MM
VOLTAGE=3.3V

(COME FROM S5 TO S0 MOSFET) 63 =PP3V3_S0_FET
(MCH HV BUFFER 3.3V PWR) =PP3V3_S0_NB_VCC_HV 17 19
=PP3V3_S0_SB 22 25 34
(ICH GPIO PULLS 3.3V PWR) =PP3V3_S0_SB_GPIO 21 23
(ICH IO BUFFER 3.3V PWR) =PP3V3_S0_SB_VCC3_3 24 25
(ICH PCI I/O 3.3V PWR) =PP3V3_S0_SB_VCC3_3_PCI 24 25
(ICH IDE I/O 3.3V PWR) =PP3V3_S0_SB_VCC3_3_IDE 24 25
(ICH PCI PULLS 3.3V PWR) =PP3V3_S0_SB_PCI 26
(ICH PM PULLS 3.3V PWR) =PP3V3_S0_SB_PM 26
(PATA PULLS 3.3V PWR) =PP3V3_S0_PATA 34
(SATA 3.3V PWR) =PP3V3_S0_SMC_LS 46
(MCH PULLS 3.3V PWR) =PP3V3_S0_NB 14 19 20
(ICH LAN I/F 3.3V PWR, NEED TO CHECK INTEL) =PP3V3_S0_SB_VCCLAN3_3 24 25
(ICH INTEL HDA CORE 3.3V PWR) =PP3V3_S0_SB_3V3_1V5_VCCHDA 24 25
(DIMM SPD 3.3V PWR) =PPSPD_S0_MEM 28 29
(CLOCK GENERATOR 3.3V PWR) =PP3V3_S0_CK410 32
(WIRELESS CARD 3.3V PWR) =PP3V3_S0_AIRPORT 43
(TPM 3.3V PWR) =PP3V3_S0_TPM 53
(AUDIO 3.3V PWR) =PP3V3_S0_AUDIO 54 56 57
(TMDS 3.3V PWR) =PP3V3_S0_TMDS 68 69
(CPU THERMAL SENSOR 3.3V PWR) =PP3V3_S0_THRM_SNR 10 49
(ISL6262 3V3) =PP3V3_S0_IMVP6 58
=PP3V3_S0_RSTBUF 26
=PP3V3_S0_SMBUS_SB 27
=PP3V3_S0_SMBUS_SMC_0 27
=PP3V3_S0_SMBUS_SMC_MLB 27
=PP3V3_S0_ALLSYSPG 63
=PP3V3_S0_FAN_RT 5 51
=PP3V3_S0_LCD 67
=PP3V3_S0_PBATTISENS 66
=PP3V3_S0_PDCISENS 62 66
=PP3V3_S0_CPUPOWER 48
=PP3V3_S0_SMBUS_SMC_BSB 27
=PP3V3_S0_1V51V05S0 62
=PP3V3_S0_2V5S0 60
(FIREWIRE DIGITAL 3.3V PWR) =PP3V3_S0_FW 39
=PP3V3_S0_ENET 36

PP5V_S0
MAKE_BASE=TRUE
MIN_LINE_WIDTH=0.30 MM
MIN_NECK_WIDTH=0.20 MM
VOLTAGE=5V

(COME FROM S5 TO S0 MOSFET) 63 =PP5V_S0_FET
=PP5V_S0_SB 25
(SATA 5V PWR) =PP5V_S0_SATA 35
(DDR2 TERMINATION) =PP5V_S0_MEMVTT 31
(AUDIO 5V PWR) =PP5V_S0_AUDIO 54 55
(AUDIO SPEAKER 5V PWR) =PP5V_S0_AUDIO_PWR 55
(LPC DEBUG BOARD 5V PWR) =PP5V_S0_LPCPLUS 5 47
(MCH TV 3.3V LDO) =PP5V_S0_NB_TVDAC 19
(ISL6262 VDD) =PP5V_S0_IMVP6 58
(LTC3728LXC EXTVCC) =PP5V_1V51V05S0_VCC 62
(TMDS 5V PWR) =PP5V_S0_TMDS 68 69
=PP5V_S0_FAN_RT 5 51
=PP5V_S0_LCD 67
=PP5V_S0_ISENSECAL 48

"S3" RAILS
ON IN RUN AND SLEEP

PP1V2_S3
MAKE_BASE=TRUE
MIN_LINE_WIDTH=0.6MM
MIN_NECK_WIDTH=0.32MM
VOLTAGE=1.2V

(LDO OUTPUT 1.2V PWR) 63 60 =PP1V2_S3_REG
(ENET 1.2V PWR) =PP1V2_S3_ENET 36

PP1V8_S3
MAKE_BASE=TRUE
MIN_LINE_WIDTH=0.6MM
MIN_NECK_WIDTH=0.4MM
VOLTAGE=1.8V

(REGULATOR OUTPUT 1.8V PWR) 61 =PP1V8_S3_REG
(DDR2 DIMM 1.8V PWR) =PP1V8_S3_MEM 19 28 29
=PP1V8_S3_P1V8S0 63
=PP1V8_S3_MEMVTT 31
=PP1V8_S3_MEM_NB_SENSE 61
=PP1V8_S3_1V2S3 60

61 29 28 19 16 14 =PP1V8_S3_MEM_NB
(MCH DDR2 1.8V PWR) PP1V8_S3_MEM_NB
MAKE_BASE=TRUE
MIN_LINE_WIDTH=0.6MM
MIN_NECK_WIDTH=0.4MM
VOLTAGE=1.8V

PP2V5_S3
MAKE_BASE=TRUE
MIN_LINE_WIDTH=0.5 mm
MIN_NECK_WIDTH=0.25 mm
VOLTAGE=2.5V

(REGULATOR OUTPUT 2.5V PWR) 60 =PP2V5_S3_REG
(ENET 2.5V PWR) =PP2V5_S3_ENET 36

PP3V3_S3
MAKE_BASE=TRUE
MIN_LINE_WIDTH=0.2 MM
MIN_NECK_WIDTH=0.16 MM
VOLTAGE=3.3V

(COME FROM S5 TO S3 MOSFET) 63 =PP3V3_S3_FET
=PP3V3_S3_SMBUS_SMC_RMT 27
(ETHERNET 3.3V PWR) =PP3V3_S3_ENET 36
(BLUETOOTH 3.3V PWR) =PP3V3_S3_BT 44
(ACCELEROMETER 3.3V PWR) =PP3V3_S3_SMS 46 52
(TPM 3.3V SUSPEND PWR) =PP3V3_S3_TPM 46 53
(TPS62050 VIN) =PP3V3_S3_2V5S3 60
(FIREWIRE CHIP PCI SIGNAL INDICATOR) =PP3V3_S3_PCI 38
=PP3V3_S3_RSTGATE 26
=PP3V3_S3_AIRPORT_AUX 43
=PP3V3_S3_FW 38
=PP3V3_S3_PDCISENS 61

PP5V_S3
MAKE_BASE=TRUE
MIN_LINE_WIDTH=0.6MM
MIN_NECK_WIDTH=0.3MM
VOLTAGE=5V

(COME FROM S5 TO S3 MOSFET) 63 =PP5V_S3_FET
(ISL6269 PVCC)
(SYSTEM LED PWR) =PP5V_S3_SYSLED 35 46
(USB IO PORT 5V PWR) =PP5V_S3_CAMERA 67
(USB IR CONTROLLER 5V PWR) =PP5V_S3_IR 41
=PP5V_S3_GEYSER 40

"S5" RAILS
ALWAYS ON WHEN UNIT HAS AC POWER (TRICKLE)

PP3V3_S5
MAKE_BASE=TRUE
MIN_LINE_WIDTH=0.6MM
MIN_NECK_WIDTH=0.3MM
VOLTAGE=3.3V

(REGULATOR OUTPUT 3.3V PWR) 59 =PP3V3_S5_REG
=PP3V3_S5_SB 23 25
(ICH USB CTL PULLS 3.3V PWR) =PP3V3_S5_SB_USB 22
(ICH PM 3.3V PWR) =PP3V3_S5_SB_PM 11 23 26
(ICH SUSPEND 3.3V PWR) =PP3V3_S5_SB_VCCSUS3_3 24 25
(ICH SUSPEND USB 3.3V PWR) =PP3V3_S5_SB_VCCSUS3_3_USB 24 25
(ICH SUSPEND PULLS 3.3V PWR) =PP3V3_S5_SB_IO 22
(ICH INTEL HDA SUSPEND 3.3V PWR) =PP3V3_S5_SB_3V3_1V5_VCCSUSHDA 24
(SPI BOOTROM PWR) =PP3V3_S5_ROM 50
=PP3V3_S5_P3V3S3 63
=PP3V3_S5_P3V3S0 63
=PP3V3_S5_FWLATEVG 39
=PP3V3_S5_LCD 67

PP5V_S5
MAKE_BASE=TRUE
MIN_LINE_WIDTH=0.6MM
MIN_NECK_WIDTH=0.3MM
VOLTAGE=5V

(REGULATOR OUTPUT 5 PWR) 59 =PP5V_S5_REG
=PP5V_S5_SB 25
=PP5V_S5_P5VS3 63
=PP5V_S5_PWRCTL 63
=PP5V_S5_P5VS0 63
=PP5V_S5_USB 42
=PP5V_S5_PATA (PATA 5V PWR) 34
=PP5V_S5_1V8S3 61

G3 HOT

PP3V42_G3H
MAKE_BASE=TRUE
MIN_LINE_WIDTH=0.2MM
MIN_NECK_WIDTH=0.2MM
VOLTAGE=3.425V

63 =PP3V42_G3H_REG
=PP3V42_G3H_SMCVREF 46
=PP3V42_G3H_SMBUS_SMC_BSA 27
=PP3V42_G3H_PWRCTL 63
=PP3V42_G3H_LIDSWITCH 65
(LPC DEBUG BOARD) =PP3V42_G3H_LPCPLUS 5 47
=PP3V42_G3H_SB_RTC 26
=PP3V42_G3H_ACIN 65 66
(SMC 32.768KHz OSC) =PP3V42_G3H_SMC_CLK 46
(SMC 3.3V PWR) =PP3V42_G3H_SMC 45 46 48

PBUS HOT

PPBUSB_G3H
MAKE_BASE=TRUE
MIN_LINE_WIDTH=0.6MM
MIN_NECK_WIDTH=0.3MM
VOLTAGE=12.6V

66 =PPBUSA_G3H
(INVERTER PBUS PWR)
(ISL6262 VIN)
(LTC3728 VIN) =PPBUS_S5_INV 67
=PPVIN_S5_IMVP6 48 58
=PPVIN_S5_1V51V05S0 62

66 =PPBUSB_G3H
(LTC3728 VIN) =PPVIN_S5_5V3V3S5 59 63
(ISL6269 VIN) =PPVIN_S5_1V8S3 61
(FIREWIRE PORT PBUS PWR) =PPBUS_S5_FWPWRSW 39
(YUKON POWER CONTROL) =PPBUS_S5_YUKON_CTRL 60

PP18V5_G3H
MAKE_BASE=TRUE
MIN_LINE_WIDTH=0.6 MM
MIN_NECK_WIDTH=0.20 MM
VOLTAGE=18.5V

65 =PP18V5_G3H_INRUSH
(DC-IN OUTPUT 18.5V PWR) =PP18V5_G3H_CHGR 66
(CHARGER INPUT 18.5V PWR)
(SMC INPUT 18.5V PWR)

DCIN G3HOT

PPDCIN_G3H
MAKE_BASE=TRUE
MIN_LINE_WIDTH=0.6MM
MIN_NECK_WIDTH=0.3MM
VOLTAGE=18.5V

65 =PPDCIN_G3H
66 =PPVBATT_G3H
=PPVIN_G3H_P3V42G3H 63

GND RAILS

XW8101
SM

57 56 55 54 =GND_AUDIO_CODEC 5 GND_AUDIO_CODEC
MAKE_BASE=TRUE

XW8102
SM

56 55 =GND_AUDIO_PWR 5 GND_AUDIO_PWR
MAKE_BASE=TRUE

Power Conn / Alias

SYNC_MASTER=ENET SYNC_DATE=11/16/2005

NOTICE OF PROPRIETARY PROPERTY

THE INFORMATION CONTAINED HEREIN IS THE PROPRIETARY PROPERTY OF APPLE COMPUTER, INC. THE POSSESSOR AGREES TO THE FOLLOWING

I TO MAINTAIN THE DOCUMENT IN CONFIDENCE
II NOT TO REPRODUCE OR COPY IT
III NOT TO REVEAL OR PUBLISH IN WHOLE OR PART

APPLE COMPUTER INC.

SIZE	DRAWING NUMBER	REV.
D	051-7173	C
SCALE NONE	SHT 81 OF 108	

Preliminary

www.laptopblue.vn

DC-JACK INTERFACE

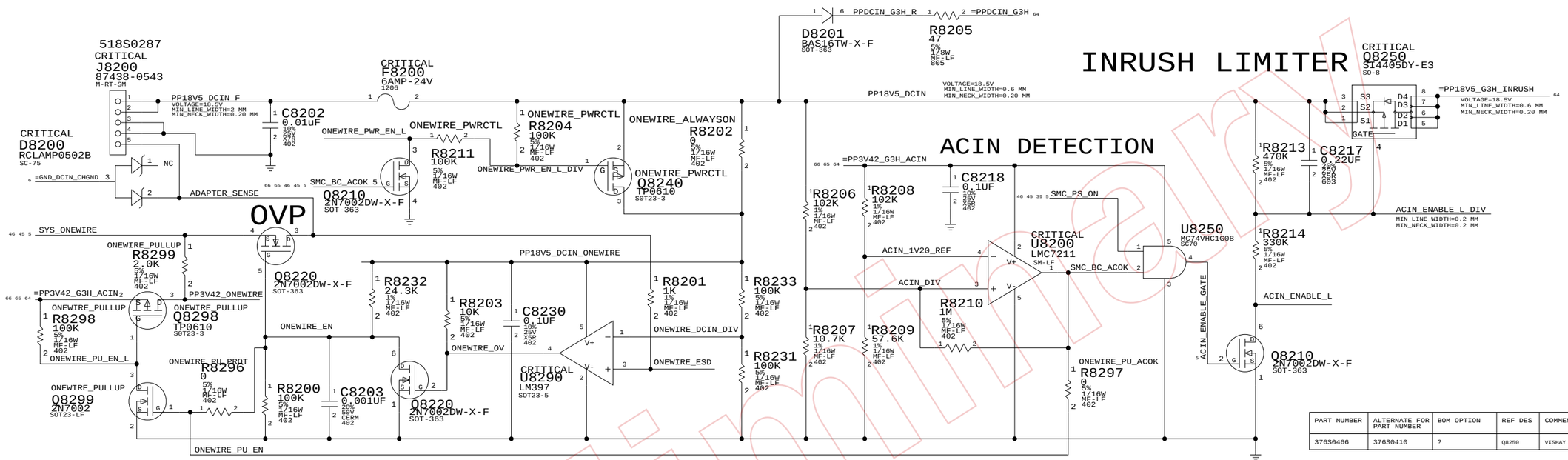

PART NUMBER	ALTERNATE FOR PART NUMBER	BOM OPTION	REF DES	COMMENTS:
376S0466	376S0410	?	Q8250	VISHAY SI4413ADY

BATTERY INTERFACE

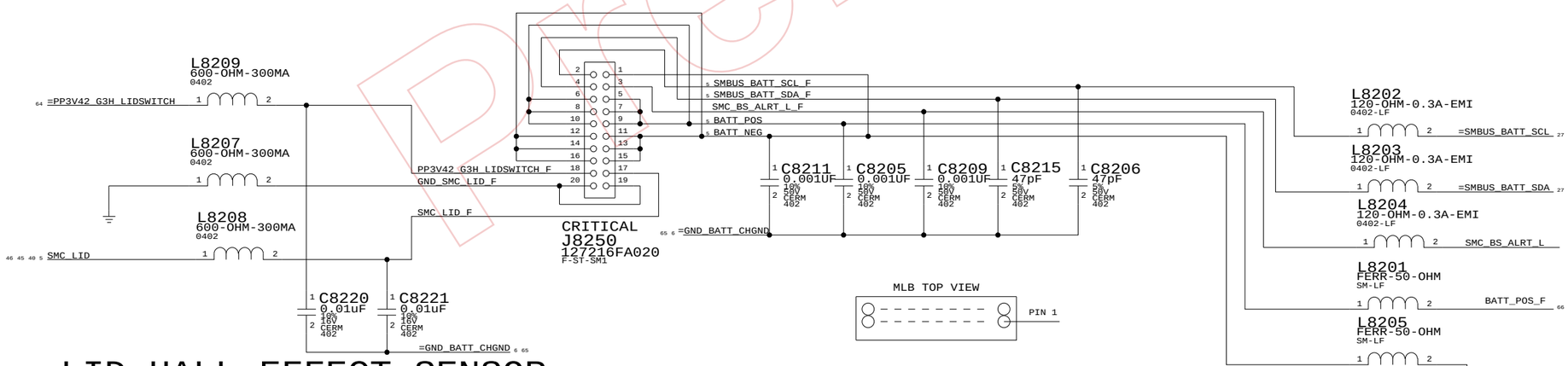

LID HALL EFFECT SENSOR

DC-In & Battery Connectors

SYNC_MASTER=POWER SYNC_DATE=07/13/2005

NOTICE OF PROPRIETARY PROPERTY

THE INFORMATION CONTAINED HEREIN IS THE PROPRIETARY PROPERTY OF APPLE COMPUTER, INC. THE POSSESSOR AGREES TO THE FOLLOWING

I TO MAINTAIN THE DOCUMENT IN CONFIDENCE
II NOT TO REPRODUCE OR COPY IT
III NOT TO REVEAL OR PUBLISH IN WHOLE OR PART

APPLE COMPUTER INC.

SIZE	DRAWING NUMBER	REV.
D	051-7173	C
SCALE NONE	SHT 82 OF 108	

Preliminary

www.laptopblue.vn

PBUS SUPPLY / BATTERY CHARGER

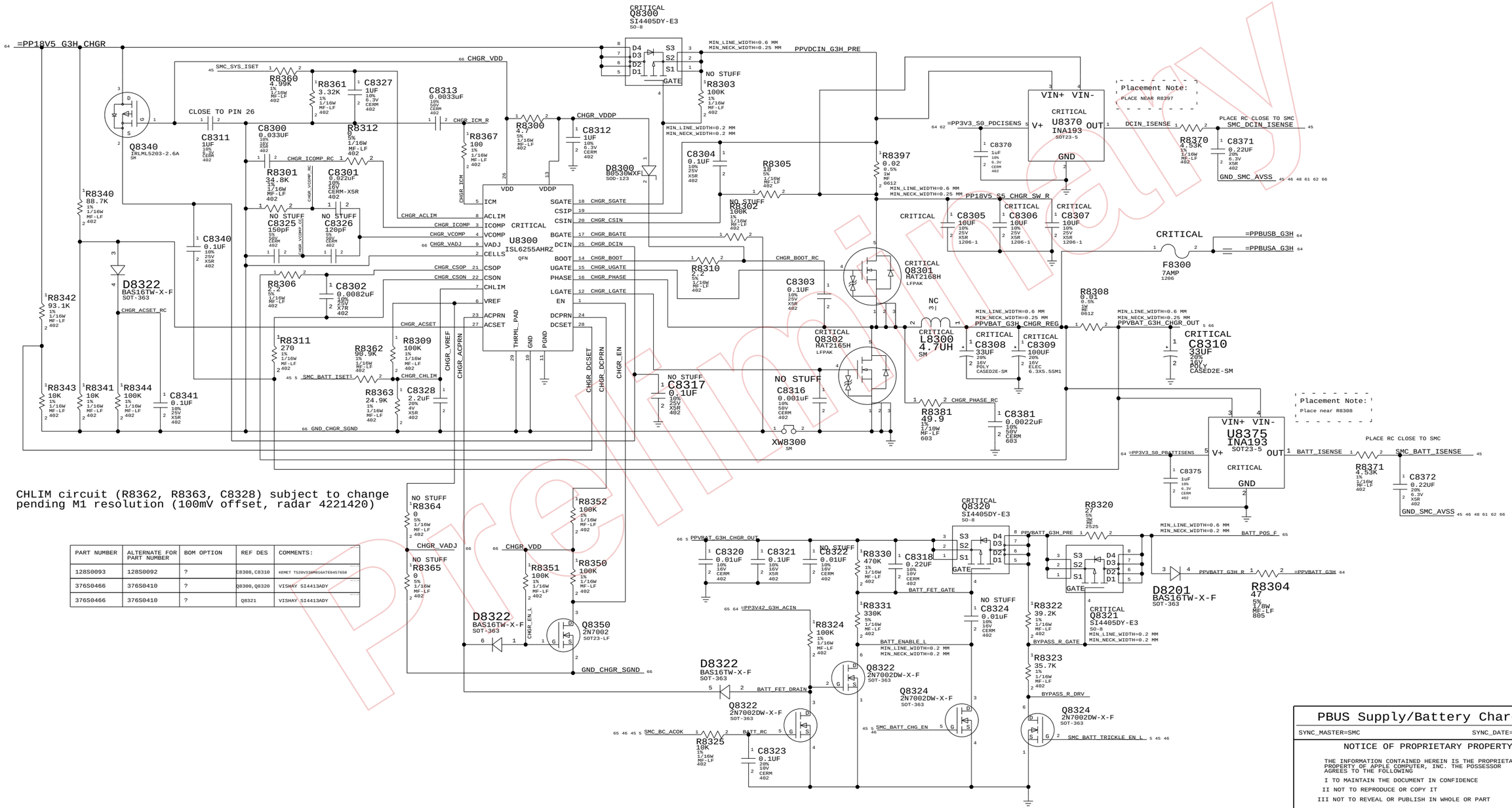

CHLIM circuit (R8362, R8363, C8328) subject to change pending M1 resolution (100mV offset, radar 4221420)

PART NUMBER	ALTERNATE FOR PART NUMBER	BOM OPTION	REF DES	COMMENTS:
128S0093	128S0092	?	C8308,C8310	KEMET T520V336M016ATE045 7650
376S0466	376S0410	?	Q8300,Q8320	VISHAY SI4413ADY
376S0466	376S0410	?	Q8321	VISHAY SI4413ADY

PBUS Supply/Battery Charger

SYNC_MASTER=SMC SYNC_DATE=08/19/2005

NOTICE OF PROPRIETARY PROPERTY

THE INFORMATION CONTAINED HEREIN IS THE PROPRIETARY PROPERTY OF APPLE COMPUTER, INC. THE POSSESSOR AGREES TO THE FOLLOWING

I TO MAINTAIN THE DOCUMENT IN CONFIDENCE

II NOT TO REPRODUCE OR COPY IT

III NOT TO REVEAL OR PUBLISH IN WHOLE OR PART

APPLE COMPUTER INC.

SIZE	DRAWING NUMBER	REV.
D	051-7173	C
SCALE NONE	SHT 83 OF 108	

www.laptopblue.vn

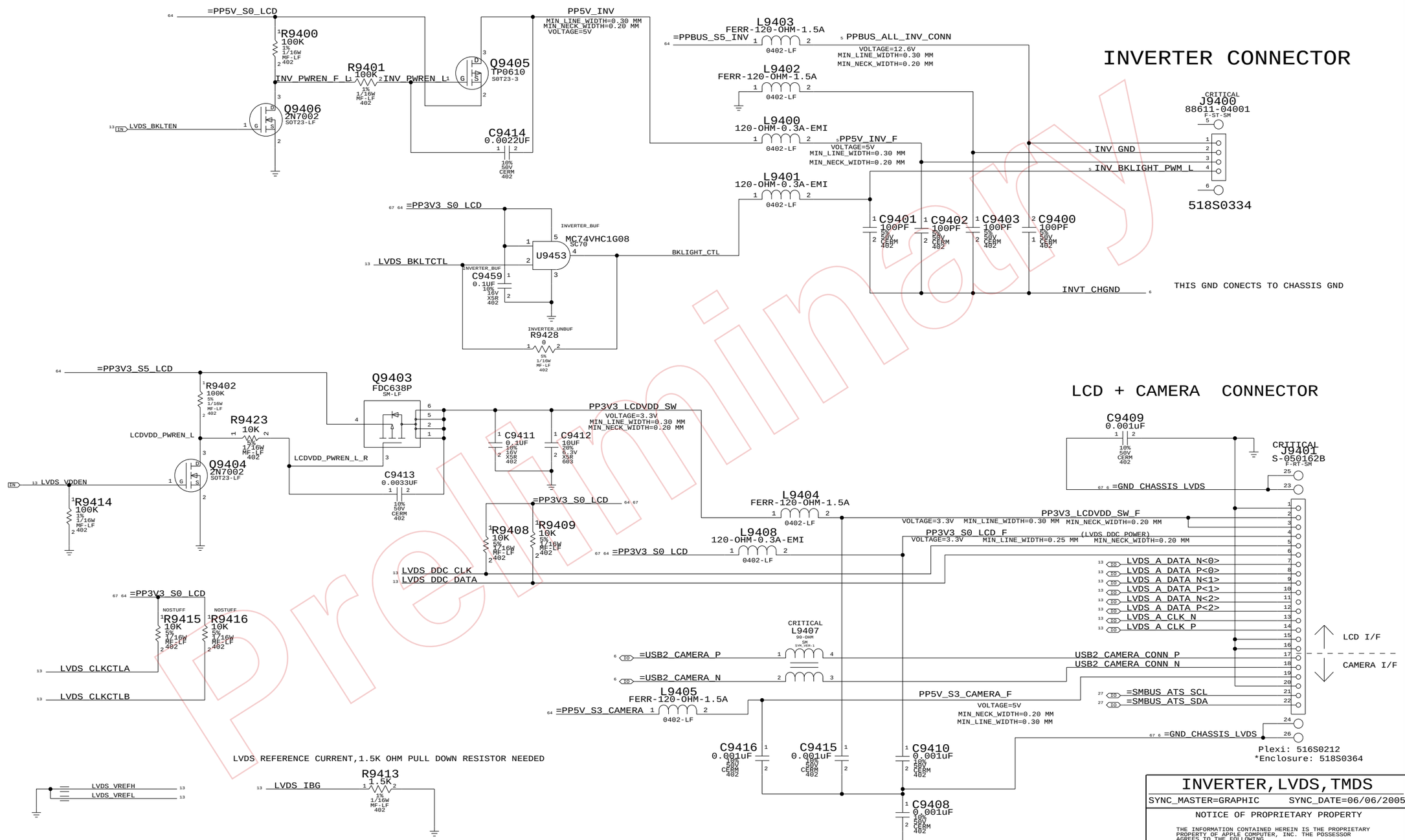

INVERTER,LVDS,TMDS

SYNC_MASTER=GRAPHIC SYNC_DATE=06/06/2005

NOTICE OF PROPRIETARY PROPERTY

THE INFORMATION CONTAINED HEREIN IS THE PROPRIETARY PROPERTY OF APPLE COMPUTER, INC. THE POSSESSOR AGREES TO THE FOLLOWING

I TO MAINTAIN THE DOCUMENT IN CONFIDENCE

II NOT TO REPRODUCE OR COPY IT

III NOT TO REVEAL OR PUBLISH IN WHOLE OR PART

APPLE COMPUTER INC.

SIZE	DRAWING NUMBER	REV.
D	051-7173	C

SCALE NONE SHT 94 OF 108

Preliminary

www.laptopblue.vn

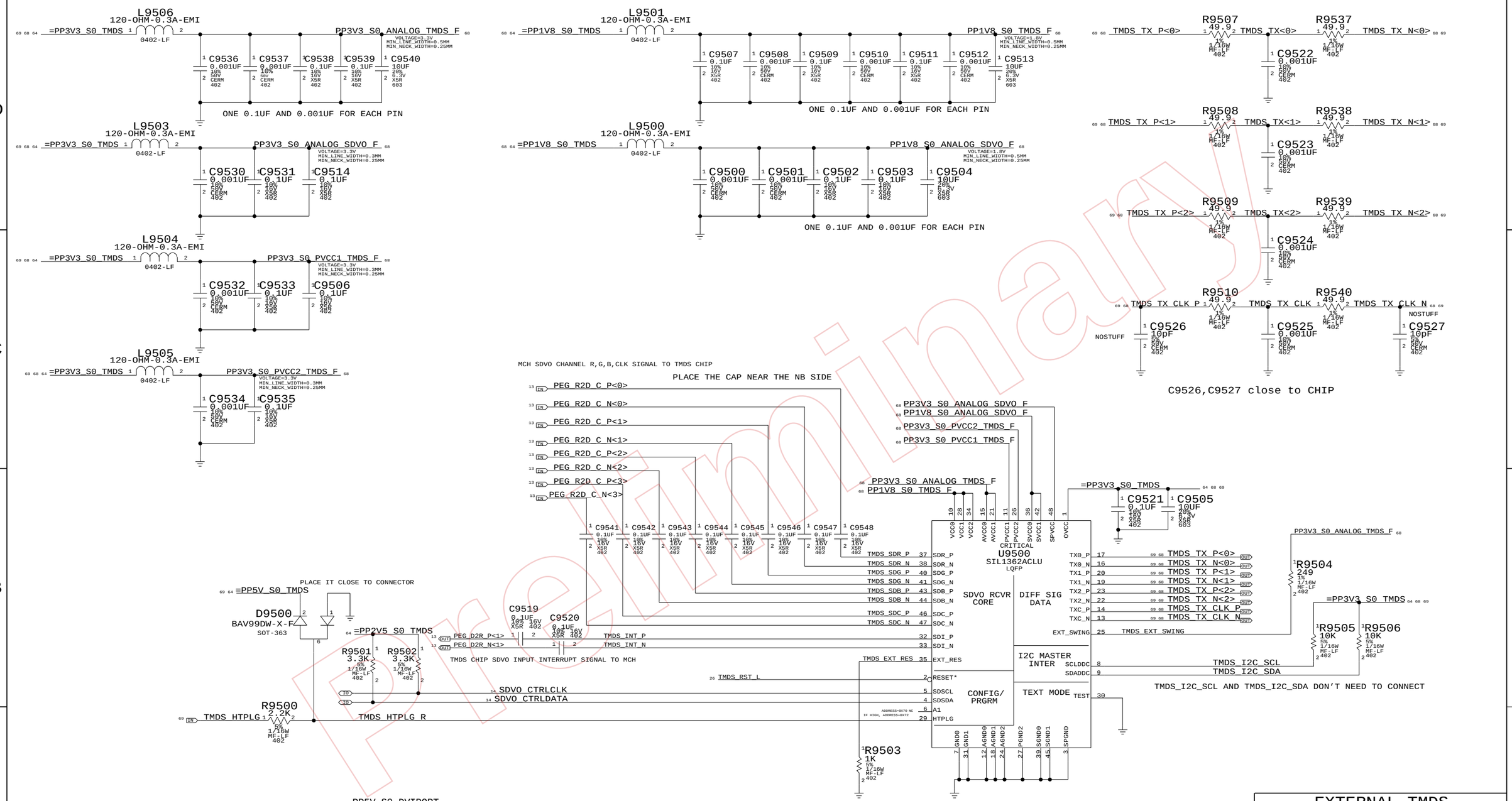

EXTERNAL TMDS

SYNC_MASTER=GRAPHIC SYNC_DATE=06/06/2005

NOTICE OF PROPRIETARY PROPERTY

THE INFORMATION CONTAINED HEREIN IS THE PROPRIETARY PROPERTY OF APPLE COMPUTER, INC. THE POSSESSOR AGREES TO THE FOLLOWING

I TO MAINTAIN THE DOCUMENT IN CONFIDENCE

II NOT TO REPRODUCE OR COPY IT

III NOT TO REVEAL OR PUBLISH IN WHOLE OR PART

APPLE COMPUTER INC.

SIZE	DRAWING NUMBER	REV.
D	051-7173	C
SCALE NONE	SHT 95 OF 108	

Preliminary

www.laptopblue.vn

PART NUMBER	ALTERNATE FOR PART NUMBER	BOM OPTION	REF DES	COMMENTS:
155S0227	155S0164	?	L9805,L9806,L9807	KEEP MAG.LAYER IN BOM

Video Connectors

EXTERNAL VIDEO (VGA) INTERFACE

Isolation required for DVI power switch

TMDS(MINI DVI) INTERFACE

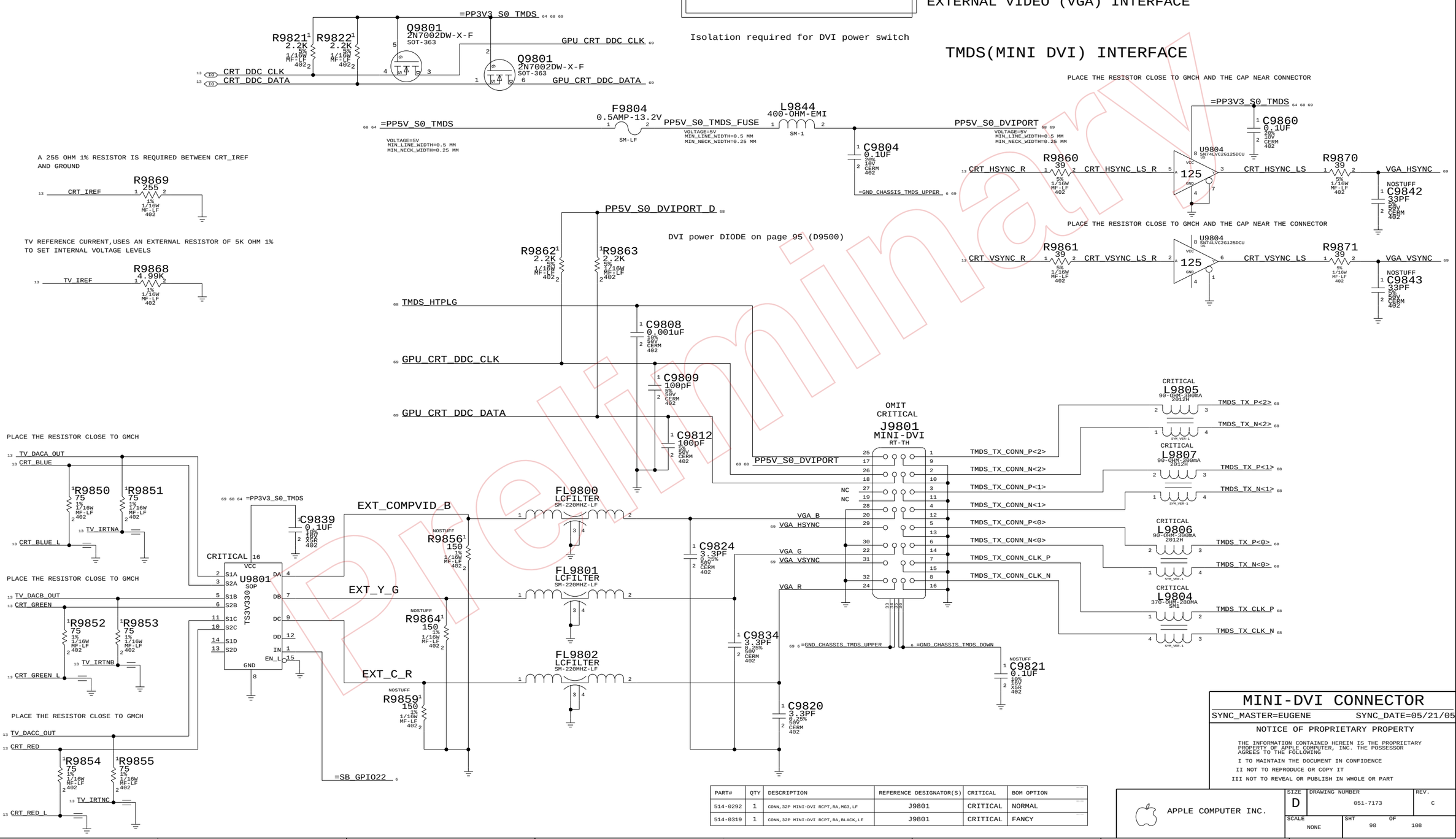

PART#	QTY	DESCRIPTION	REFERENCE DESIGNATOR(S)	CRITICAL	BOM OPTION
514-0292	1	CONN,32P MINI-DVI RCPT,RA,MG3,LF	J9801	CRITICAL	NORMAL
514-0319	1	CONN,32P MINI-DVI RCPT,RA,BLACK,LF	J9801	CRITICAL	FANCY

MINI-DVI CONNECTOR

SYNC_MASTER=EUGENE SYNC_DATE=05/21/05

NOTICE OF PROPRIETARY PROPERTY

THE INFORMATION CONTAINED HEREIN IS THE PROPRIETARY PROPERTY OF APPLE COMPUTER, INC. THE POSSESSOR AGREES TO THE FOLLOWING

I TO MAINTAIN THE DOCUMENT IN CONFIDENCE

II NOT TO REPRODUCE OR COPY IT

III NOT TO REVEAL OR PUBLISH IN WHOLE OR PART

APPLE COMPUTER INC.

SIZE	DRAWING NUMBER	REV.
D	051-7173	C

SCALE NONE SHT 98 OF 108

Preliminary

www.laptopblue.vn

Title: Basenet Report
Design: m42a
Date: Aug 5 16:01:17 2006

Base nets and synonyms for m42a_lib.M42A(@m42a_lib.m42a(sch_1))

Base Signal	Synonyms	Location([Zone][dir])
1V2_FB	1V2_FB - @m42a_lib.M42A	60A3
1V05S0_BG	1V05S0_BG - @m42a_lib.M42A	62B4
1V05S0_BOOST	1V05S0_BOOST - @m42a_lib.M42A	62B4
1V05S0_BOOST_RC	1V05S0_BOOST_RC - @m42a_lib.M42A	62C3
1V05S0_COMP	1V05S0_COMP - @m42a_lib.M42A	5D7
1V05S0_FSET	1V05S0_FSET - @m42a_lib.M42A	5D7
1V05S0_ITH	1V05S0_ITH - @m42a_lib.M42A	62B4
1V05S0_ITH_RC	1V05S0_ITH_RC - @m42a_lib.M42A	62B3
1V05S0_RUNSS	1V05S0_RUNSS - @m42a_lib.M42A	62B4 63B7
1V05S0_SNS_N	1V05S0_SNS_N - @m42a_lib.M42A	62C3
1V05S0_SNS_P	1V05S0_SNS_P - @m42a_lib.M42A	62C3
1V05S0_SW	1V05S0_SW - @m42a_lib.M42A	62B4
1V05S0_TG	1V05S0_TG - @m42a_lib.M42A	62C4
1V05S0_VOSNS	1V05S0_VOSNS - @m42a_lib.M42A	62B4
1V5S0_BG	1V5S0_BG - @m42a_lib.M42A	62B5
1V5S0_BOOST	1V5S0_BOOST - @m42a_lib.M42A	62B5
1V5S0_BOOST_RC	1V5S0_BOOST_RC - @m42a_lib.M42A	62C6
1V5S0_ITH	1V5S0_ITH - @m42a_lib.M42A	62B5
1V5S0_ITH_RC	1V5S0_ITH_RC - @m42a_lib.M42A	62B5
1V5S0_RUNSS	1V5S0_RUNSS - @m42a_lib.M42A	5D7 62B5 63B7
1V5S0_SNS_N	1V5S0_SNS_N - @m42a_lib.M42A	62C6
1V5S0_SNS_P	1V5S0_SNS_P - @m42a_lib.M42A	62C6
1V5S0_SW	1V5S0_SW - @m42a_lib.M42A	62B5
1V5S0_TG	1V5S0_TG - @m42a_lib.M42A	62C5
1V5S0_VOSNS	1V5S0_VOSNS - @m42a_lib.M42A	62B5
1V8S3_BOOT	1V8S3_BOOT - @m42a_lib.M42A	61B5
1V8S3_BOOT_RC	1V8S3_BOOT_RC - @m42a_lib.M42A	61C4
1V8S3_COMP	1V8S3_COMP - @m42a_lib.M42A	5D7 61B6
1V8S3_COMP_R	1V8S3_COMP_R - @m42a_lib.M42A	61B6
1V8S3_FB	1V8S3_FB - @m42a_lib.M42A	61B6
1V8S3_FCCM	1V8S3_FCCM - @m42a_lib.M42A	61B6
1V8S3_FSET	1V8S3_FSET - @m42a_lib.M42A	5D7 61C6
1V8S3_ISEN	1V8S3_ISEN - @m42a_lib.M42A	61B5
1V8S3_LG	1V8S3_LG - @m42a_lib.M42A	61B5
1V8S3_PHASE	1V8S3_PHASE - @m42a_lib.M42A	61B5
1V8S3_UG	1V8S3_UG - @m42a_lib.M42A	61C5
1V8S3_VCC	1V8S3_VCC - @m42a_lib.M42A	61C6
1V51V05S0_FCB	1V51V05S0_FCB - @m42a_lib.M42A	62A3 62B5
1V51V05S0_FSEL	1V51V05S0_FSEL - @m42a_lib.M42A	62A2 62B4
1V51V05S0_PGOOD	1V51V05S0_PGOOD - @m42a_lib.M42A	58C7 62A1 63C2
2V5S0_BP	2V5S0_BP - @m42a_lib.M42A	60C3
2V5S3_BP	2V5S3_BP - @m42a_lib.M42A	60C3
3V3S5_BG	3V3S5_BG - @m42a_lib.M42A	59B5
3V3S5_BOOST	3V3S5_BOOST - @m42a_lib.M42A	59B5
3V3S5_BOOST_RC	3V3S5_BOOST_RC - @m42a_lib.M42A	59C6
3V3S5_COMP	3V3S5_COMP - @m42a_lib.M42A	5D7
3V3S5_FSET	3V3S5_FSET - @m42a_lib.M42A	5D7
3V3S5_ITH	3V3S5_ITH - @m42a_lib.M42A	59B5
3V3S5_ITH_RC	3V3S5_ITH_RC - @m42a_lib.M42A	59B5
3V3S5_RUNSS	3V3S5_RUNSS - @m42a_lib.M42A	59B5 63C7
3V3S5_SNS_N	3V3S5_SNS_N - @m42a_lib.M42A	59C6
3V3S5_SNS_P	3V3S5_SNS_P - @m42a_lib.M42A	59C6
3V3S5_SW	3V3S5_SW - @m42a_lib.M42A	59B5
3V3S5_TG	3V3S5_TG - @m42a_lib.M42A	59C5
3V3S5_VOSNS	3V3S5_VOSNS - @m42a_lib.M42A	59B5
5V3V3S5_FCB	5V3V3S5_FCB - @m42a_lib.M42A	59A3 59B5
5V3V3S5_FSEL	5V3V3S5_FSEL - @m42a_lib.M42A	59A2 59B4
5VS5_BG	5VS5_BG - @m42a_lib.M42A	59B4
5VS5_BOOST	5VS5_BOOST - @m42a_lib.M42A	59B4
5VS5_BOOST_RC	5VS5_BOOST_RC - @m42a_lib.M42A	59C3
5VS5_ITH	5VS5_ITH - @m42a_lib.M42A	59B4
5VS5_ITH_RC	5VS5_ITH_RC - @m42a_lib.M42A	59B3
5VS5_RUNSS	5VS5_RUNSS - @m42a_lib.M42A	5D7 59B4 63C7
5VS5_SNS_N	5VS5_SNS_N - @m42a_lib.M42A	59C3
5VS5_SNS_P	5VS5_SNS_P - @m42a_lib.M42A	59C3
5VS5_SW	5VS5_SW - @m42a_lib.M42A	59B4
5VS5_TG	5VS5_TG - @m42a_lib.M42A	59C4
5VS5_VOSNS	5VS5_VOSNS - @m42a_lib.M42A	59B4
5V_REG_IN	5V_REG_IN - @m42a_lib.M42A	54A5
=EXTBUSB_OC_L	=EXTBUSB_OC_L - @m42a_lib.M42A	6C2 42C8
	USB_C_OC_L - @m42a_lib.M42A	6C1 22C4 22D8
	EXTBUSB_OC_L - @m42a_lib.M42A	6C2
=FWPWR_PWRON	=FWPWR_PWRON - @m42a_lib.M42A	6D2 39C6
	NC_FWPWR_PWRON - @m42a_lib.M42A	6D1
=GND_BATT_CHGND	=GND_BATT_CHGND - @m42a_lib.M42A	6D8 65A6 65A6
	=GND_CHASSIS_AUDIO_JACK - @m42a_lib.M42A	6D8 56B8
	=GND_CHASSIS_AUDIO_MIC - @m42a_lib.M42A	6D8 57A6
	=GND_CHASSIS_DIPDIMM_LEFT - @m42a_lib.M42A	6D8 28A5
	GND_CHASSIS_IO - @m42a_lib.M42A	6C7 6D7
	=GND_CHASSIS_USB - @m42a_lib.M42A	6C8 42A2 42A4 42C2 42C4
	=GND_CHASSIS_FW_DOWN - @m42a_lib.M42A	6C8 39A1
	GND_CHASSIS_IO - @m42a_lib.M42A	6C7 6D7
	=GND_CHASSIS_USB - @m42a_lib.M42A	6C8 42A2 42A4 42C2 42C4
	=GND_CHASSIS_FW_DOWN - @m42a_lib.M42A	6C8 39A1
	=GND_CHASSIS_DIPDIMM_LEFT - @m42a_lib.M42A	6D8 28A5
	=GND_CHASSIS_AUDIO_SPKRCONN - @m42a_lib.M42A	6D8
	=GND_CHASSIS_AUDIO_SHIELD3 - @m42a_lib.M42A	6D8
	=GND_CHASSIS_AUDIO_SHIELD2 - @m42a_lib.M42A	6D8
	=GND_CHASSIS_AUDIO_SHIELD1 - @m42a_lib.M42A	6D8
	=GND_CHASSIS_AUDIO_MIC - @m42a_lib.M42A	6D8 57A6
	=GND_CHASSIS_AUDIO_JACK - @m42a_lib.M42A	6D8 56B8
=GND_CHASSIS_DIPDIMM_CENTER	=GND_CHASSIS_DIPDIMM_CENTER - @m42a_lib.M42A	6B8 28D5 29A5
	GND_CHASSIS_CENTER - @m42a_lib.M42A	6B7
=GND_CHASSIS_DIPDIMM_RIGHT	=GND_CHASSIS_DIPDIMM_RIGHT - @m42a_lib.M42A	6B8 29D4
	GND_CHASSIS_RIGHT - @m42a_lib.M42A	6B7
=GND_CHASSIS_FW_UPPER	=GND_CHASSIS_FW_UPPER - @m42a_lib.M42A	6A6 39A1
	=GND_CHASSIS_TMDS_DOWN - @m42a_lib.M42A	6A6 69A3
	GND_CHASSIS_IO1 - @m42a_lib.M42A	6A5
	=GND_CHASSIS_TMDS_DOWN - @m42a_lib.M42A	6A6 69A3
=GND_CHASSIS_LVDS	=GND_CHASSIS_LVDS - @m42a_lib.M42A	6C8 67A2 67B2
	GND_CHASSIS_SATA - @m42a_lib.M42A	6C7 35C8
=GND_CHASSIS_RJ45	=GND_CHASSIS_RJ45 - @m42a_lib.M42A	6C8 37A4
	=GND_CHASSIS_TMDS_UPPER - @m42a_lib.M42A	6C8 69A4 69C3
	GND_CHASSIS_DCIN - @m42a_lib.M42A	6C7
	=GND_DCIN_CHGND - @m42a_lib.M42A	6C8 65C8
	GND_CHASSIS_DCIN - @m42a_lib.M42A	6C7
	=GND_DCIN_CHGND - @m42a_lib.M42A	6C8 65C8
	=GND_CHASSIS_TMDS_UPPER - @m42a_lib.M42A	6C8 69A4 69C3
=P1V2S0_EN	=P1V2S0_EN - @m42a_lib.M42A	63B5
	PM_SLP_S3_LS12V6_L - @m42a_lib.M42A	63B6
	=P3V3S0_EN - @m42a_lib.M42A	63B5
	=P5VS0_EN - @m42a_lib.M42A	63C5
	PM_SLP_S3_LS12V6_L - @m42a_lib.M42A	63B6
=P1V8S0_EN_L	=P1V8S0_EN_L - @m42a_lib.M42A	63A5
	PM_SLP_S3_LS5V - @m42a_lib.M42A	63A6
=P3V3S3_EN_L	=P3V3S3_EN_L - @m42a_lib.M42A	63C5
	PM_SLP_S4_LS5V - @m42a_lib.M42A	42B8 63D6
	=P5VS3_EN_L - @m42a_lib.M42A	63D5
	PM_SLP_S4_LS5V - @m42a_lib.M42A	42B8 63D6
=PP1V05_S0_FSB_NB	=PP1V05_S0_FSB_NB - @m42a_lib.M42A	12A7 12B7 12C2 19D7 33B8 33C7 33C8 64D6
	=PP1V05_S0_NB - @m42a_lib.M42A	19D1 19D7 64C6
	=PP1V05_S0_CPU_NB - @m42a_lib.M42A	62A6 64D8
	=PP1V05_S0_NB_VTT - @m42a_lib.M42A	17D3 19B5 19D7 64C6
	=PP1V05_S0_CPU - @m42a_lib.M42A	7B5 7B6 7D5 7D5 8C7 9C8 11B3 11C5 64D6
	=PPVCORE_S0_NB - @m42a_lib.M42A	16C8 16D3 19C8 19D7 64D6
	PP1V05_S0_CPU_NB - @m42a_lib.M42A	64D7
	=PPVCORE_S0_NB - @m42a_lib.M42A	16C8 16D3 19C8 19D7 64D6
	=PP1V05_S0_NB_VTT - @m42a_lib.M42A	17D3 19B5 19D7 64C6
	=PP1V05_S0_NB - @m42a_lib.M42A	19D1 19D7 64C6
	=PP1V05_S0_CPU_NB - @m42a_lib.M42A	62A6 64D8
	=PP1V05_S0_CPU - @m42a_lib.M42A	7B5 7B6 7D5 7D5 8C7 9C8 11B3 11C5 64D6
=PP1V05_S0_REG	=PP1V05_S0_REG - @m42a_lib.M42A	5B2 62B1 64D8
	=PP1V05_S0_CPU_NB_SENSE - @m42a_lib.M42A	62A8 64D6
	=PP1V05_S0_SB_CPU_IO - @m42a_lib.M42A	21C1 21C1 24C3 25C4 64D6
	=PPVCORE_S0_SB - @m42a_lib.M42A	24D3 25D3 64D6
	PP1V05_S0 - @m42a_lib.M42A	5B2 64D7
	=PPVCORE_S0_SB - @m42a_lib.M42A	24D3 25D3 64D6
	=PP1V05_S0_SB_CPU_IO - @m42a_lib.M42A	21C1 21C1 24C3 25C4 64D6
	=PP1V05_S0_CPU_NB_SENSE - @m42a_lib.M42A	62A8 64D6
=PP1V5_S0_NB	=PP1V5_S0_NB - @m42a_lib.M42A	19C1 19D7 64C6
	=PP1V5_S0_NB_PCIE - @m42a_lib.M42A	13D2 19D7 64C6
	=PP1V5_S0_AIRPORT - @m42a_lib.M42A	43D3 64C6
	=PP1V5_S0_SB_VCCSATAPLL - @m42a_lib.M42A	24B5 25D6 64C6
	=PP1V5_S0_SB_VCC1_5_A_ATX - @m42a_lib.M42A	24A5 25C6 64C6
	=PP1V5_S0_SB_VCCUSBPLL - @m42a_lib.M42A	24A5 25B6 64C6
	=PP1V5_S0_SB_VCC1_5_A_USB_CORE - @m42a_lib.M42A	24A3 25B2 64C6
	=PP1V5_S0_SB_VCC1_5_A - @m42a_lib.M42A	24A3 25C2 64C6
	=PP1V5_S0_SB - @m42a_lib.M42A	25A8 25C8 64C6
	=PP1V5_S0_NB_VCCAUX - @m42a_lib.M42A	16D1 17B6 19B6 19D7 64C6
	=PP1V5_S0_NB_VCCD_HMPLL - @m42a_lib.M42A	17C6 19D7 64C6
	=PP1V5_S0_NB_VCCD_LVDS - @m42a_lib.M42A	17C6 19B8 19D7 64C6
	=PP1V5_S0_NB_PLL - @m42a_lib.M42A	19C6 19D7 64C6
	=PP1V5_S0_NB_TVDAC - @m42a_lib.M42A	19A8 19D7 64C6
	=PP1V5_S0_NB_3G - @m42a_lib.M42A	19B5 64C6
	=PP1V5_S0_NB_3GPLL - @m42a_lib.M42A	19A5 64C6
	=PP1V5_S0_SB_VCC1_5_A_ARX - @m42a_lib.M42A	24B5 25D6 64C6
	=PP1V5_S0_CPU - @m42a_lib.M42A	8B7 9D8 64C6
	=PP1V5_S0_REG - @m42a_lib.M42A	62B8 64C8
	PP1V5_S0 - @m42a_lib.M42A	5B2 64C7
	=PP1V5_S0_SB_VCCUSBPLL - @m42a_lib.M42A	24A5 25B6 64C6
	=PP1V5_S0_SB_VCCSATAPLL - @m42a_lib.M42A	24B5 25D6 64C6
	=PP1V5_S0_SB_VCC1_5_A_USB_CORE - @m42a_lib.M42A	24A3 25B2 64C6
	=PP1V5_S0_SB_VCC1_5_A_ATX - @m42a_lib.M42A	24A5 25C6 64C6
	=PP1V5_S0_SB_VCC1_5_A_ARX - @m42a_lib.M42A	24B5 25D6 64C6
	=PP1V5_S0_SB_VCC1_5_A - @m42a_lib.M42A	24A3 25C2 64C6
	=PP1V5_S0_SB - @m42a_lib.M42A	25A8 25C8 64C6
	=PP1V5_S0_REG - @m42a_lib.M42A	62B8 64C8
	=PP1V5_S0_NB_VCCD_LVDS - @m42a_lib.M42A	17C6 19B8 19D7 64C6
	=PP1V5_S0_NB_VCCD_HMPLL - @m42a_lib.M42A	17C6 19D7 64C6
	=PP1V5_S0_NB_VCCAUX - @m42a_lib.M42A	16D1 17B6 19B6 19D7 64C6
	=PP1V5_S0_NB_TVDAC - @m42a_lib.M42A	19A8 19D7 64C6
	=PP1V5_S0_NB_PLL - @m42a_lib.M42A	19C6 19D7 64C6
	=PP1V5_S0_NB_PCIE - @m42a_lib.M42A	13D2 19D7 64C6
	=PP1V5_S0_NB_3GPLL - @m42a_lib.M42A	19A5 64C6
	=PP1V5_S0_NB_3G - @m42a_lib.M42A	19B5 64C6
	=PP1V5_S0_CPU - @m42a_lib.M42A	8B7 9D8 64C6
	=PP1V5_S0_AIRPORT - @m42a_lib.M42A	43D3 64C6
=PP1V8_S3_MEM_NB	=PP1V8_S3_MEM_NB - @m42a_lib.M42A	14C2 16B6 19D7 28D2 29D2 61C2 64C6
	PP1V8_S3_MEM_NB - @m42a_lib.M42A	64C4
=PP2V5_S0_NB_CRTDAC	=PP2V5_S0_NB_CRTDAC - @m42a_lib.M42A	19D4 19D7 64B6
	=PP2V5_S0_NB_VCCA_3GBG - @m42a_lib.M42A	17D6 19B7 19D7 64B6
	=PP2V5_S0_NB_VCC_TXLVDS - @m42a_lib.M42A	17D6 19B8 19D7 64B6
	=PP2V5_S0_NB_DISP_PLL - @m42a_lib.M42A	19D6 64B6
	=PP2V5_S0_NB_VCCA_LVDS - @m42a_lib.M42A	17C6 19C7 19D1 64B6
	=PP2V5_S0_TMDS - @m42a_lib.M42A	64B6 68B7
	=PP2V5_S0_NB_VCCSYNC - @m42a_lib.M42A	17D6 19B6 19D7 64B6
	=PP2V5_S0_REG - @m42a_lib.M42A	60C2 63B3 64B8
	PP2V5_S0 - @m42a_lib.M42A	5B2 64B7
	=PP2V5_S0_TMDS - @m42a_lib.M42A	64B6 68B7
	=PP2V5_S0_REG - @m42a_lib.M42A	60C2 63B3 64B8
	=PP2V5_S0_NB_VCC_TXLVDS - @m42a_lib.M42A	17D6 19B8 19D7 64B6
	=PP2V5_S0_NB_VCCSYNC - @m42a_lib.M42A	17D6 19B6 19D7 64B6
	=PP2V5_S0_NB_VCCA_LVDS - @m42a_lib.M42A	17C6 19C7 19D1 64B6
	=PP2V5_S0_NB_VCCA_3GBG - @m42a_lib.M42A	17D6 19B7 19D7 64B6
	=PP2V5_S0_NB_DISP_PLL - @m42a_lib.M42A	19D6 64B6
=PP3V3_S0_FAN_RT	=PP3V3_S0_FAN_RT - @m42a_lib.M42A	5D2 51C4 64A6
	=PP3V3_S0_ENET - @m42a_lib.M42A	36C8 64A6
	=PP3V3_S0_FW - @m42a_lib.M42A	39C6 64A6
	=PP3V3_S0_2V5S0 - @m42a_lib.M42A	60C4 64A6
	=PP3V3_S0_1V51V05S0 - @m42a_lib.M42A	62B1 64A6
	=PP3V3_S0_SMBUS_SMC_BSB - @m42a_lib.M42A	27B1 64A6
	=PP3V3_S0_RSTBUF - @m42a_lib.M42A	26B4 64A6
	=PP3V3_S0_SMBUS_SB - @m42a_lib.M42A	27D8 64A6
	=PP3V3_S0_SMBUS_SMC_0 - @m42a_lib.M42A	27D5 64A6
	=PP3V3_S0_SMBUS_SMC_MLB - @m42a_lib.M42A	27C5 64A6
	=PP3V3_S0_ALLSYSPG - @m42a_lib.M42A	63B1 64A6
	=PP3V3_S0_LCD - @m42a_lib.M42A	64A6 67B5 67B5 67B7 67C6
	=PP3V3_S0_PBATTISENS - @m42a_lib.M42A	64A6 66B3
	=PP3V3_S0_PDCISENS - @m42a_lib.M42A	62A5 64A6 66C4
	=PP3V3_S0_CPUPOWER - @m42a_lib.M42A	48C2 64A6
	=PP3V3_S0_SB - @m42a_lib.M42A	22B5 25D8 34C8 64B6
	=PP3V3_S0_SB_GPIO - @m42a_lib.M42A	21C3 21D3 23B2 23D5 64B6
	=PP3V3_S0_SB_VCC3_3 - @m42a_lib.M42A	24B5 24B5 25B8 25C6 64B6
	=PP3V3_S0_SB_VCC3_3_PCI - @m42a_lib.M42A	24B3 25A4 64B6
	=PP3V3_S0_SB_VCC3_3_IDE - @m42a_lib.M42A	24C3 25B4 64B6
	=PP3V3_S0_SB_PCI - @m42a_lib.M42A	26D1 64B6
	=PP3V3_S0_SB_PM - @m42a_lib.M42A	26B6 26B8 64B6
	=PP3V3_S0_PATA - @m42a_lib.M42A	34C2 64A6
	=PP3V3_S0_SMC_LS - @m42a_lib.M42A	46D3 64A6
	=PP3V3_S0_NB - @m42a_lib.M42A	14C7 14D6 19C7 20A4 20B4 20B4 64A6
	=PP3V3_S0_SB_VCCLAN3_3 - @m42a_lib.M42A	24D3 25D3 64A6
	=PP3V3_S0_SB_3V3_1V5_VCCHDA - @m42a_lib.M42A	24C3 25C4 64A6
	=PPSPD_S0_MEM - @m42a_lib.M42A	28A7 29A3 29A7 64A6
	=PP3V3_S0_CK410 - @m42a_lib.M42A	32C7 32D3 32D8 64A6
	=PP3V3_S0_AIRPORT - @m42a_lib.M42A	43C3 64A6
	=PP3V3_S0_TPM - @m42a_lib.M42A	53D4 64A6
	=PP3V3_S0_AUDIO - @m42a_lib.M42A	54A6 54D7 56D8 57B5 64A6
	=PP3V3_S0_TMDS - @m42a_lib.M42A	64A6 68B1 68B2 68C8 68C8 68D8 68D8 69B7 69D1 69D5
	=PP3V3_S0_THRM_SNR - @m42a_lib.M42A	10C4 49B3 49D3 64A6
	=PP3V3_S0_IMVP6 - @m42a_lib.M42A	58D8 64A6
	=PP3V3_S0_NB_VCC_HV - @m42a_lib.M42A	17C6 19B7 19C7 64B6
	=PP3V3_S0_FET - @m42a_lib.M42A	63C3 64B8
	PP3V3_S0 - @m42a_lib.M42A	5A2 64B7
	=PPSPD_S0_MEM - @m42a_lib.M42A	28A7 29A3 29A7 64A6
	=PP3V3_S0_TPM - @m42a_lib.M42A	53D4 64A6
	=PP3V3_S0_TMDS - @m42a_lib.M42A	64A6 68B1 68B2 68C8 68C8 68D8 68D8 69B7 69D1 69D5
	=PP3V3_S0_THRM_SNR - @m42a_lib.M42A	10C4 49B3 49D3 64A6
	=PP3V3_S0_SMC_LS - @m42a_lib.M42A	46D3 64A6
	=PP3V3_S0_SMBUS_SMC_MLB - @m42a_lib.M42A	27C5 64A6
	=PP3V3_S0_SMBUS_SMC_BSB - @m42a_lib.M42A	27B1 64A6
	=PP3V3_S0_SMBUS_SMC_0 - @m42a_lib.M42A	27D5 64A6
	=PP3V3_S0_SMBUS_SB - @m42a_lib.M42A	27D8 64A6
	=PP3V3_S0_SB_VCCLAN3_3 - @m42a_lib.M42A	24D3 25D3 64A6
	=PP3V3_S0_SB_VCC3_3_PCI - @m42a_lib.M42A	24B3 25A4 64B6
	=PP3V3_S0_SB_VCC3_3_IDE - @m42a_lib.M42A	24C3 25B4 64B6
	=PP3V3_S0_SB_VCC3_3 - @m42a_lib.M42A	24B5 24B5 25B8 25C6 64B6
	=PP3V3_S0_SB_PM - @m42a_lib.M42A	26B6 26B8 64B6
	=PP3V3_S0_SB_PCI - @m42a_lib.M42A	26D1 64B6
	=PP3V3_S0_SB_GPIO - @m42a_lib.M42A	21C3 21D3 23B2 23D5 64B6
	=PP3V3_S0_SB_3V3_1V5_VCCHDA - @m42a_lib.M42A	24C3 25C4 64A6
	=PP3V3_S0_SB - @m42a_lib.M42A	22B5 25D8 34C8 64B6
	=PP3V3_S0_RSTBUF - @m42a_lib.M42A	26B4 64A6
	=PP3V3_S0_PDCISENS - @m42a_lib.M42A	62A5 64A6 66C4
	=PP3V3_S0_PBATTISENS - @m42a_lib.M42A	64A6 66B3
	=PP3V3_S0_PATA - @m42a_lib.M42A	34C2 64A6
	=PP3V3_S0_NB_VCC_HV - @m42a_lib.M42A	17C6 19B7 19C7 64B6
	=PP3V3_S0_NB - @m42a_lib.M42A	14C7 14D6 19C7 20A4 20B4 20B4 64A6
	=PP3V3_S0_LCD - @m42a_lib.M42A	64A6 67B5 67B5 67B7 67C6
	=PP3V3_S0_IMVP6 - @m42a_lib.M42A	58D8 64A6
	=PP3V3_S0_FW - @m42a_lib.M42A	39C6 64A6
	=PP3V3_S0_FET - @m42a_lib.M42A	63C3 64B8
	=PP3V3_S0_ENET - @m42a_lib.M42A	36C8 64A6
	=PP3V3_S0_CPUPOWER - @m42a_lib.M42A	48C2 64A6
	=PP3V3_S0_CK410 - @m42a_lib.M42A	32C7 32D3 32D8 64A6
	=PP3V3_S0_AUDIO - @m42a_lib.M42A	54A6 54D7 56D8 57B5 64A6
	=PP3V3_S0_ALLSYSPG - @m42a_lib.M42A	63B1 64A6
	=PP3V3_S0_AIRPORT - @m42a_lib.M42A	43C3 64A6
	=PP3V3_S0_2V5S0 - @m42a_lib.M42A	60C4 64A6
	=PP3V3_S0_1V51V05S0 - @m42a_lib.M42A	62B1 64A6
=PP3V42_G3H_LPCPLUS	=PP3V42_G3H_LPCPLUS - @m42a_lib.M42A	5D2 47C6 64D1
	=PP3V42_G3H_SMCVREF - @m42a_lib.M42A	46C8 64D1
	=PP3V42_G3H_SMC - @m42a_lib.M42A	45D2 45D3 45D3 46D1 46D5 46D8 48C8 64D1
	=PP3V42_G3H_SB_RTC - @m42a_lib.M42A	26D6 64D1
	=PP3V42_G3H_ACIN - @m42a_lib.M42A	64D1 65C4 65C8 66A5
	=PP3V42_G3H_SMC_CLK - @m42a_lib.M42A	46A8 64D1
	=PP3V42_G3H_LIDSWITCH - @m42a_lib.M42A	64D1 65A8
	=PP3V42_G3H_REG - @m42a_lib.M42A	63D1 64D3
	=PP3V42_G3H_SMBUS_SMC_BSA - @m42a_lib.M42A	27C3 64D1
	=PP3V42_G3H_PWRCTL - @m42a_lib.M42A	63B8 63C8 64D1
	PP3V42_G3H - @m42a_lib.M42A	5A2 64D1
	=PP3V42_G3H_SMC_CLK - @m42a_lib.M42A	46A8 64D1
	=PP3V42_G3H_SMCVREF - @m42a_lib.M42A	46C8 64D1
	=PP3V42_G3H_SMC - @m42a_lib.M42A	45D2 45D3 45D3 46D1 46D5 46D8 48C8 64D1
	=PP3V42_G3H_SMBUS_SMC_BSA - @m42a_lib.M42A	27C3 64D1
	=PP3V42_G3H_SB_RTC - @m42a_lib.M42A	26D6 64D1
	=PP3V42_G3H_REG - @m42a_lib.M42A	63D1 64D3
	=PP3V42_G3H_PWRCTL - @m42a_lib.M42A	63B8 63C8 64D1
	=PP3V42_G3H_LIDSWITCH - @m42a_lib.M42A	64D1 65A8
	=PP3V42_G3H_ACIN - @m42a_lib.M42A	64D1 65C4 65C8 66A5
=PP5V_S0_FAN_RT	=PP5V_S0_FAN_RT - @m42a_lib.M42A	5D2 51C4 64D3
	=PP5V_S0_ISENSECAL - @m42a_lib.M42A	48A8 64D3
	=PP5V_S0_LCD - @m42a_lib.M42A	64D3 67D7
	=PP5V_S0_TMDS - @m42a_lib.M42A	64D3 68B7 69C6
	=PP5V_S0_IMVP6 - @m42a_lib.M42A	58D8 64D3
	=PP5V_1V51V05S0_VCC - @m42a_lib.M42A	62A8 64D3
	=PP5V_S0_NB_TVDAC - @m42a_lib.M42A	19C4 19C7 64D3
	=PP5V_S0_LPCPLUS - @m42a_lib.M42A	5D2 47C6 64D3
	=PP5V_S0_AUDIO_PWR - @m42a_lib.M42A	55B8 55B8 55D8 64D3
	=PP5V_S0_AUDIO - @m42a_lib.M42A	54A6 55C8 64D3
	=PP5V_S0_MEMVTT - @m42a_lib.M42A	31C6 64D3
	=PP5V_S0_FET - @m42a_lib.M42A	63C3 64D6
	=PP5V_S0_SATA - @m42a_lib.M42A	35C6 64D3
	=PP5V_S0_SB - @m42a_lib.M42A	25D8 64D3
	PP5V_S0 - @m42a_lib.M42A	5A2 64D4
	=PP5V_S0_TMDS - @m42a_lib.M42A	64D3 68B7 69C6
	=PP5V_S0_SB - @m42a_lib.M42A	25D8 64D3
	=PP5V_S0_SATA - @m42a_lib.M42A	35C6 64D3
	=PP5V_S0_NB_TVDAC - @m42a_lib.M42A	19C4 19C7 64D3
	=PP5V_S0_MEMVTT - @m42a_lib.M42A	31C6 64D3
	=PP5V_S0_LPCPLUS - @m42a_lib.M42A	5D2 47C6 64D3
	=PP5V_S0_LCD - @m42a_lib.M42A	64D3 67D7
	=PP5V_S0_ISENSECAL - @m42a_lib.M42A	48A8 64D3
	=PP5V_S0_IMVP6 - @m42a_lib.M42A	58D8 64D3
	=PP5V_S0_FET - @m42a_lib.M42A	63C3 64D6
	=PP5V_S0_AUDIO_PWR - @m42a_lib.M42A	55B8 55B8 55D8 64D3
	=PP5V_S0_AUDIO - @m42a_lib.M42A	54A6 55C8 64D3
	=PP5V_1V51V05S0_VCC - @m42a_lib.M42A	62A8 64D3
=PP5V_S0_IDE_PATA	=PP5V_S0_IDE_PATA - @m42a_lib.M42A	34C5
	PP5V_S0_IDE_PATA - @m42a_lib.M42A	34D3
=PPDCIN_G3H	=PPDCIN_G3H - @m42a_lib.M42A	64B3 65D3
	=PPVBATT_G3H - @m42a_lib.M42A	64B3 66B2
	=PPVIN_G3H_P3V42G3H - @m42a_lib.M42A	63D3 64B1
	PPDCIN_G3H - @m42a_lib.M42A	64B1
	=PPVIN_G3H_P3V42G3H - @m42a_lib.M42A	63D3 64B1
	=PPVBATT_G3H - @m42a_lib.M42A	64B3 66B2
=SMBUS_ATS_SCL	=SMBUS_ATS_SCL - @m42a_lib.M42A	27D1 67A2
	SMBUS_SMC_RMT_SCL - @m42a_lib.M42A	27D2
	SMB_RMT_CLK - @m42a_lib.M42A	27D3 45B5
	SMBUS_SMC_RMT_SCL - @m42a_lib.M42A	27D2
=SMBUS_ATS_SDA	=SMBUS_ATS_SDA - @m42a_lib.M42A	27C1 67A2
	SMBUS_SMC_RMT_SDA - @m42a_lib.M42A	27D2
	SMB_RMT_DATA - @m42a_lib.M42A	27D3 45B5
	SMBUS_SMC_RMT_SDA - @m42a_lib.M42A	27D2
=SMB_AIRPORT_CLK	=SMB_AIRPORT_CLK - @m42a_lib.M42A	27C6 43B4
	=SMB_GEYSER_CLK - @m42a_lib.M42A	27B6 40C4
	SMBUS_SB_SCL - @m42a_lib.M42A	27D7
	=I2C_SODIMMB_SCL - @m42a_lib.M42A	27C6 29A6
	SMB_CLK - @m42a_lib.M42A	23D5 27D8
	=I2C_SODIMMA_SCL - @m42a_lib.M42A	27D6 28A6
	SMB_CK410_CLK - @m42a_lib.M42A	27D6 32B6
	SMB_CLK - @m42a_lib.M42A	23D5 27D8
	SMB_CK410_CLK - @m42a_lib.M42A	27D6 32B6
	SMBUS_SB_SCL - @m42a_lib.M42A	27D7
	=SMB_GEYSER_CLK - @m42a_lib.M42A	27B6 40C4
	=I2C_SODIMMB_SCL - @m42a_lib.M42A	27C6 29A6
	=I2C_SODIMMA_SCL - @m42a_lib.M42A	27D6 28A6
=SMB_AIRPORT_DATA	=SMB_AIRPORT_DATA - @m42a_lib.M42A	27C6 43B4
	=SMB_GEYSER_DATA - @m42a_lib.M42A	27B6 40C4
	SMBUS_SB_SDA - @m42a_lib.M42A	27D7
	=I2C_SODIMMB_SDA - @m42a_lib.M42A	27C6 29A6
	SMB_DATA - @m42a_lib.M42A	23D5 27D8
	=I2C_SODIMMA_SDA - @m42a_lib.M42A	27C6 28A6
	SMB_CK410_DATA - @m42a_lib.M42A	27D6 32B6
	SMB_DATA - @m42a_lib.M42A	23D5 27D8
	SMB_CK410_DATA - @m42a_lib.M42A	27D6 32B6
	SMBUS_SB_SDA - @m42a_lib.M42A	27D7
	=SMB_GEYSER_DATA - @m42a_lib.M42A	27B6 40C4
	=I2C_SODIMMB_SDA - @m42a_lib.M42A	27C6 29A6
	=I2C_SODIMMA_SDA - @m42a_lib.M42A	27C6 28A6
=USB2_AIRPORT_N	=USB2_AIRPORT_N - @m42a_lib.M42A	6B2 43B4
	USB_H_N - @m42a_lib.M42A	6B1 22C2
	USB2_AIRPORT_N - @m42a_lib.M42A	6B2
=USB2_AIRPORT_P	=USB2_AIRPORT_P - @m42a_lib.M42A	6B2 43B4
	USB_H_P - @m42a_lib.M42A	6B1 22C2
	USB2_AIRPORT_P - @m42a_lib.M42A	6B2
=USB2_CAMERA_N	=USB2_CAMERA_N - @m42a_lib.M42A	6C2 67A4
	USB_D_N - @m42a_lib.M42A	6C1 22C2
	USB2_CAMERA_N - @m42a_lib.M42A	6C2
=USB2_CAMERA_P	=USB2_CAMERA_P - @m42a_lib.M42A	6C2 67B4
	USB_D_P - @m42a_lib.M42A	6C1 22C2
	USB2_CAMERA_P - @m42a_lib.M42A	6C2
ACIN_1V20_REF	ACIN_1V20_REF - @m42a_lib.M42A	65C4
ACIN_DIV	ACIN_DIV - @m42a_lib.M42A	65C4
ACIN_ENABLE_GATE	ACIN_ENABLE_GATE - @m42a_lib.M42A	5C1 65C3
ACIN_ENABLE_L	ACIN_ENABLE_L - @m42a_lib.M42A	65C2
ACIN_ENABLE_L_DIV	ACIN_ENABLE_L_DIV - @m42a_lib.M42A	65C1
ACZ_BITCLK	ACZ_BITCLK - @m42a_lib.M42A	5C1 21C7 54D7
ACZ_RST_L	ACZ_RST_L - @m42a_lib.M42A	5C1 21C7 54C7 57C3
ACZ_SDATAIN<0>	ACZ_SDATAIN<0> - @m42a_lib.M42A	5D1 21C7 54D7
ACZ_SDATAOUT	ACZ_SDATAOUT - @m42a_lib.M42A	5D1 21C7 54D7
ACZ_SYNC	ACZ_SYNC - @m42a_lib.M42A	5C1 21C7 54D7
ADAPTER_SENSE	ADAPTER_SENSE - @m42a_lib.M42A	65C7
AIRPORT_CLK100M_PCIE_N	AIRPORT_CLK100M_PCIE_N - @m42a_lib.M42A	33B2 33C4 43C6
AIRPORT_CLK100M_PCIE_P	AIRPORT_CLK100M_PCIE_P - @m42a_lib.M42A	33B2 33D4 43C6
AIRPORT_RST_L	AIRPORT_RST_L - @m42a_lib.M42A	26B1 43C4
ALL_SYS_PWRGD	ALL_SYS_PWRGD - @m42a_lib.M42A	5B2 26A5 45D8 63B1
ALS_GAIN	ALS_GAIN - @m42a_lib.M42A	45B5 46C6
ALS_LEFT	ALS_LEFT - @m42a_lib.M42A	5A7 45A8 46C3
ALS_RIGHT	ALS_RIGHT - @m42a_lib.M42A	45A8 46C3
AUDIO_SHIELD_PLANE	AUDIO_SHIELD_PLANE - @m42a_lib.M42A	56C3

www.laptopblue.vn

AUD_4V5_SHDN_L	AUD_4V5_SHDN_L - @m42a_lib.M42A	54A5
AUD_ALC_COUT	AUD_ALC_COUT - @m42a_lib.M42A	54B5
AUD_ANALOG_FILT_1	AUD_ANALOG_FILT_1 - @m42a_lib.M42A	54C4
AUD_ANALOG_FILT_2	AUD_ANALOG_FILT_2 - @m42a_lib.M42A	54C4
AUD_BI_PORT_A_L	AUD_BI_PORT_A_L - @m42a_lib.M42A	54C1 57C3
AUD_BI_PORT_A_R	AUD_BI_PORT_A_R - @m42a_lib.M42A	54C1 57B3
AUD_BI_PORT_B_L	AUD_BI_PORT_B_L - @m42a_lib.M42A	54C1 57A6
	AUD_BI_PORT_B_R - @m42a_lib.M42A	54C1 57A6
AUD_BI_PORT_C_L	AUD_BI_PORT_C_L - @m42a_lib.M42A	54C7 55B8
AUD_BI_PORT_C_R	AUD_BI_PORT_C_R - @m42a_lib.M42A	54C7 55C8
AUD_BI_PORT_D_L	AUD_BI_PORT_D_L - @m42a_lib.M42A	54C7 57A5
AUD_BI_PORT_D_R	AUD_BI_PORT_D_R - @m42a_lib.M42A	54C7 55A8
AUD_BI_PORT_E_L	AUD_BI_PORT_E_L - @m42a_lib.M42A	54C1 57A5
AUD_BI_PORT_E_R	AUD_BI_PORT_E_R - @m42a_lib.M42A	54C1 57A5
AUD_BI_PORT_F_L	AUD_BI_PORT_F_L - @m42a_lib.M42A	54C1 57B3
AUD_BI_PORT_F_R	AUD_BI_PORT_F_R - @m42a_lib.M42A	54C1 57A3
AUD_BYPASS	AUD_BYPASS - @m42a_lib.M42A	54C4
AUD_CONNJ1_RING	AUD_CONNJ1_RING - @m42a_lib.M42A	56C7
AUD_CONNJ1_RING_F	AUD_CONNJ1_RING_F - @m42a_lib.M42A	56C6
AUD_CONNJ1_SLEEVE	AUD_CONNJ1_SLEEVE - @m42a_lib.M42A	56D7
AUD_CONNJ1_SLEEVEDET	AUD_CONNJ1_SLEEVEDET - @m42a_lib.M42A	56C7
AUD_CONNJ1_SLEEVEDET_F	AUD_CONNJ1_SLEEVEDET_F - @m42a_lib.M42A	56C6
AUD_CONNJ1_SLEEVE_F	AUD_CONNJ1_SLEEVE_F - @m42a_lib.M42A	56D5
AUD_CONNJ1_TIP	AUD_CONNJ1_TIP - @m42a_lib.M42A	56C7
AUD_CONNJ1_TIPDET	AUD_CONNJ1_TIPDET - @m42a_lib.M42A	56D7
AUD_CONNJ1_TIPDET_F	AUD_CONNJ1_TIPDET_F - @m42a_lib.M42A	56D6
AUD_CONNJ1_TIP_F	AUD_CONNJ1_TIP_F - @m42a_lib.M42A	56C6
AUD_CONNJ2_RING	AUD_CONNJ2_RING - @m42a_lib.M42A	56B7
AUD_CONNJ2_RING_F	AUD_CONNJ2_RING_F - @m42a_lib.M42A	56B6
AUD_CONNJ2_SLEEVE	AUD_CONNJ2_SLEEVE - @m42a_lib.M42A	56B7
AUD_CONNJ2_SLEEVEDET	AUD_CONNJ2_SLEEVEDET - @m42a_lib.M42A	56A7
AUD_CONNJ2_SLEEVEDET_F	AUD_CONNJ2_SLEEVEDET_F - @m42a_lib.M42A	56A6
AUD_CONNJ2_SLEEVE_F	AUD_CONNJ2_SLEEVE_F - @m42a_lib.M42A	56B6
AUD_CONNJ2_TIP	AUD_CONNJ2_TIP - @m42a_lib.M42A	56B7
AUD_CONNJ2_TIPDET	AUD_CONNJ2_TIPDET - @m42a_lib.M42A	56B7
AUD_CONNJ2_TIPDET_F	AUD_CONNJ2_TIPDET_F - @m42a_lib.M42A	56B6
AUD_CONNJ2_TIP_F	AUD_CONNJ2_TIP_F - @m42a_lib.M42A	56B6
AUD_GPIO_0	AUD_GPIO_0 - @m42a_lib.M42A	54B8 55A8
AUD_GPIO_0_R	AUD_GPIO_0_R - @m42a_lib.M42A	54B7 54C7
AUD_GPIO_1	AUD_GPIO_1 - @m42a_lib.M42A	54B8 57C3
AUD_GPIO_1_R	AUD_GPIO_1_R - @m42a_lib.M42A	54A7 54C7
AUD_GPIO_2	AUD_GPIO_2 - @m42a_lib.M42A	54C7
AUD_INJACK_INSERT_L	AUD_INJACK_INSERT_L - @m42a_lib.M42A	57C7
AUD_J1_COM	AUD_J1_COM - @m42a_lib.M42A	56C4
AUD_J1_DET_RC	AUD_J1_DET_RC - @m42a_lib.M42A	57D7
AUD_J1_SLEEVEDET_INV	AUD_J1_SLEEVEDET_INV - @m42a_lib.M42A	57C7
AUD_J1_SLEEVEDET_R	AUD_J1_SLEEVEDET_R - @m42a_lib.M42A	56C3 57C6 57C8
AUD_J1_TIPDET_R	AUD_J1_TIPDET_R - @m42a_lib.M42A	56C3 57D8
AUD_J2_COM	AUD_J2_COM - @m42a_lib.M42A	56B4
AUD_J2_DET_RC	AUD_J2_DET_RC - @m42a_lib.M42A	57B7
AUD_J2_OPT_OUT	AUD_J2_OPT_OUT - @m42a_lib.M42A	56B7
AUD_J2_SLEEVEDET_R	AUD_J2_SLEEVEDET_R - @m42a_lib.M42A	56A4 57B8
AUD_J2_TIPDET_R	AUD_J2_TIPDET_R - @m42a_lib.M42A	56A4 57B8
AUD_JDREF	AUD_JDREF - @m42a_lib.M42A	54C4
AUD_OUTJACK_INSERT_L	AUD_OUTJACK_INSERT_L - @m42a_lib.M42A	57D7
AUD_PORTA_DET_L	AUD_PORTA_DET_L - @m42a_lib.M42A	57D5
AUD_PORTA_L	AUD_PORTA_L - @m42a_lib.M42A	56C3 57D1
AUD_PORTA_L_R	AUD_PORTA_L_R - @m42a_lib.M42A	57B1 57D3
AUD_PORTA_R	AUD_PORTA_R - @m42a_lib.M42A	56C3 57C1
AUD_PORTA_R_R	AUD_PORTA_R_R - @m42a_lib.M42A	57B1 57C3
AUD_PORTE_DET_L	AUD_PORTE_DET_L - @m42a_lib.M42A	57D5
AUD_PORTF_L	AUD_PORTF_L - @m42a_lib.M42A	56B4 57B1
AUD_PORTF_L_R	AUD_PORTF_L_R - @m42a_lib.M42A	57B2
AUD_PORTF_R	AUD_PORTF_R - @m42a_lib.M42A	56B4 57A1
AUD_PORTF_R_R	AUD_PORTF_R_R - @m42a_lib.M42A	57A2
AUD_PORTG_DET_L	AUD_PORTG_DET_L - @m42a_lib.M42A	57C5
AUD_SENSE_A	AUD_SENSE_A - @m42a_lib.M42A	54C1 57C5 57D8
AUD_SENSE_B	AUD_SENSE_B - @m42a_lib.M42A	54C1 57C4 57C8 57D8
AUD_SPDIF_IN	AUD_SPDIF_IN - @m42a_lib.M42A	54C1 56B3
AUD_SPDIF_OUT	AUD_SPDIF_OUT - @m42a_lib.M42A	54D1 56D3
AUD_SPDIF_OUT_R	AUD_SPDIF_OUT_R - @m42a_lib.M42A	54D4
AUD_SPKRAMP_INL	AUD_SPKRAMP_INL - @m42a_lib.M42A	55B6
AUD_SPKRAMP_INL_L	AUD_SPKRAMP_INL_L - @m42a_lib.M42A	55B7
AUD_SPKRAMP_INR	AUD_SPKRAMP_INR - @m42a_lib.M42A	55C6
AUD_SPKRAMP_INR_L	AUD_SPKRAMP_INR_L - @m42a_lib.M42A	55C7
AUD_SPKRAMP_INSUB	AUD_SPKRAMP_INSUB - @m42a_lib.M42A	55A6
AUD_SPKRAMP_INSUB_L	AUD_SPKRAMP_INSUB_L - @m42a_lib.M42A	55A7
AUD_SPKRAMP_SHUTDOWN_L	AUD_SPKRAMP_SHUTDOWN_L - @m42a_lib.M42A	55A6 55B8 55C8
AUD_VREF_FILT	AUD_VREF_FILT - @m42a_lib.M42A	54C4
AUD_VREF_PORT_B	AUD_VREF_PORT_B - @m42a_lib.M42A	54C1 57A6
BAL_IN_COM	BAL_IN_COM - @m42a_lib.M42A	54C7 57A3
BAL_IN_L	BAL_IN_L - @m42a_lib.M42A	54C7 57A3
BAL_IN_R	BAL_IN_R - @m42a_lib.M42A	54C7 57A3
BATT_ENABLE_L	BATT_ENABLE_L - @m42a_lib.M42A	66A4
BATT_FET_DRAIN	BATT_FET_DRAIN - @m42a_lib.M42A	66A5
BATT_FET_GATE	BATT_FET_GATE - @m42a_lib.M42A	66A4
BATT_IN	BATT_IN - @m42a_lib.M42A	5D1
BATT_ISENSE	BATT_ISENSE - @m42a_lib.M42A	66B2
BATT_NEG	BATT_NEG - @m42a_lib.M42A	5D1 65A6
BATT_POS	BATT_POS - @m42a_lib.M42A	5D1 65A6
BATT_POS_F	BATT_POS_F - @m42a_lib.M42A	65A2 66B2
BATT_RC	BATT_RC - @m42a_lib.M42A	66A5
BEEP	BEEP - @m42a_lib.M42A	54C6
BIOS_REC	BIOS_REC - @m42a_lib.M42A	23A6 23C5
BKLIGHT_CTL	BKLIGHT_CTL - @m42a_lib.M42A	67C4
BOOT_LPC_SPI_L	BOOT_LPC_SPI_L - @m42a_lib.M42A	5C2 22B3 45C8 47C6
BYPASS_R_DRV	BYPASS_R_DRV - @m42a_lib.M42A	66A3
BYPASS_R_GATE	BYPASS_R_GATE - @m42a_lib.M42A	66A3
CHASSIS_AUDIO_JACK_ISOL	CHASSIS_AUDIO_JACK_ISOL - @m42a_lib.M42A	56A3 56A8 56B1 56B6 56B6 56C1 56C1 56C8
CHGR_ACLIM	CHGR_ACLIM - @m42a_lib.M42A	66C6
CHGR_ACPRN	CHGR_ACPRN - @m42a_lib.M42A	66B6
CHGR_ACSET	CHGR_ACSET - @m42a_lib.M42A	66C6
CHGR_ACSET_RC	CHGR_ACSET_RC - @m42a_lib.M42A	66C8
CHGR_BGATE	CHGR_BGATE - @m42a_lib.M42A	66C5
CHGR_BOOT	CHGR_BOOT - @m42a_lib.M42A	66C5
CHGR_BOOT_RC	CHGR_BOOT_RC - @m42a_lib.M42A	66C4
CHGR_CHLIM	CHGR_CHLIM - @m42a_lib.M42A	66B6
CHGR_CSIN	CHGR_CSIN - @m42a_lib.M42A	66C5
CHGR_CSON	CHGR_CSON - @m42a_lib.M42A	66C6
CHGR_CSOP	CHGR_CSOP - @m42a_lib.M42A	66C6

CHGR_DCIN	CHGR_DCIN - @m42a_lib.M42A	66C5
CHGR_DCPRN	CHGR_DCPRN - @m42a_lib.M42A	66B5
CHGR_DCSET	CHGR_DCSET - @m42a_lib.M42A	66B5
CHGR_EN	CHGR_EN - @m42a_lib.M42A	66B5
CHGR_EN_L	CHGR_EN_L - @m42a_lib.M42A	66A6
CHGR_ICM	CHGR_ICM - @m42a_lib.M42A	66C6
CHGR_ICM_R	CHGR_ICM_R - @m42a_lib.M42A	66C6
CHGR_ICOMP	CHGR_ICOMP - @m42a_lib.M42A	66C6
CHGR_ICOMP_RC	CHGR_ICOMP_RC - @m42a_lib.M42A	66C7
CHGR_LGATE	CHGR_LGATE - @m42a_lib.M42A	66C5
CHGR_PHASE	CHGR_PHASE - @m42a_lib.M42A	66C5
CHGR_PHASE_RC	CHGR_PHASE_RC - @m42a_lib.M42A	66B4
CHGR_SGATE	CHGR_SGATE - @m42a_lib.M42A	66C5
CHGR_UGATE	CHGR_UGATE - @m42a_lib.M42A	66C5
CHGR_VADJ	CHGR_VADJ - @m42a_lib.M42A	66B6 66C6
CHGR_VCOMP	CHGR_VCOMP - @m42a_lib.M42A	66C6
CHGR_VCOMP_CC	CHGR_VCOMP_CC - @m42a_lib.M42A	66C7
CHGR_VCOMP_RC	CHGR_VCOMP_RC - @m42a_lib.M42A	66C7
CHGR_VDD	CHGR_VDD - @m42a_lib.M42A	66B6 66D6
CHGR_VDDP	CHGR_VDDP - @m42a_lib.M42A	66C5
CHGR_VREF	CHGR_VREF - @m42a_lib.M42A	66B6
CK410_CLK14P3M_TIMER	CK410_CLK14P3M_TIMER - @m42a_lib.M42A	32A4 33B8
CK410_CPU0_N	CK410_CPU0_N - @m42a_lib.M42A	5C7 32C4 33D5
CK410_CPU0_P	CK410_CPU0_P - @m42a_lib.M42A	5C7 32C4 33D5
CK410_CPU1_N	CK410_CPU1_N - @m42a_lib.M42A	5C7 32C4 33D5
CK410_CPU1_P	CK410_CPU1_P - @m42a_lib.M42A	5C7 32C4 33D5
CK410_CPU2_ITP_SRC10_N	CK410_CPU2_ITP_SRC10_N - @m42a_lib.M42A	5C7 32C4 33D5
CK410_CPU2_ITP_SRC10_P	CK410_CPU2_ITP_SRC10_P - @m42a_lib.M42A	5C7 32C4 33D5
CK410_DOT96_27M_N	CK410_DOT96_27M_N - @m42a_lib.M42A	5C7 32A4 33B5
CK410_DOT96_27M_P	CK410_DOT96_27M_P - @m42a_lib.M42A	5C7 32A4 33B5
CK410_FSB_TEST_MODE	CK410_FSB_TEST_MODE - @m42a_lib.M42A	32C6 33B8
CK410_IREF	CK410_IREF - @m42a_lib.M42A	32B6
CK410_LVDS_N	CK410_LVDS_N - @m42a_lib.M42A	5C7 32B4 33A5
CK410_LVDS_P	CK410_LVDS_P - @m42a_lib.M42A	5C7 32B4 33A5
CK410_PCI1_CLK	CK410_PCI1_CLK - @m42a_lib.M42A	32B6 33D8
CK410_PCI2_CLK	CK410_PCI2_CLK - @m42a_lib.M42A	32B6 33D8
CK410_PCI3_CLK	CK410_PCI3_CLK - @m42a_lib.M42A	32B6 33D8
CK410_PCI4_CLK	CK410_PCI4_CLK - @m42a_lib.M42A	32B6
CK410_PCI4_CLK_SPN	CK410_PCI4_CLK_SPN - @m42a_lib.M42A	5C7
CK410_PCI5_FCTSEL1	CK410_PCI5_FCTSEL1 - @m42a_lib.M42A	32B6 33A8
CK410_PCIF0_CLK	CK410_PCIF0_CLK - @m42a_lib.M42A	32B7 33D8
CK410_PCIF1_CLK	CK410_PCIF1_CLK - @m42a_lib.M42A	5C7 32B6 33D8
CK410_PD_VTT_PWRGD_L	CK410_PD_VTT_PWRGD_L - @m42a_lib.M42A	26A8 32A4
	VR_PWRGD_CK410_L - @m42a_lib.M42A	26A7 58C7
CK410_REF1_FCTSEL0	CK410_REF1_FCTSEL0 - @m42a_lib.M42A	32A4 33A8
CK410_SRC1_N	CK410_SRC1_N - @m42a_lib.M42A	6B4 32B4
	CK410_SRC1_N_SPN - @m42a_lib.M42A	5C7 6B3
CK410_SRC1_P	CK410_SRC1_P - @m42a_lib.M42A	6B4 32B4
	CK410_SRC1_P_SPN - @m42a_lib.M42A	5C7 6B3
CK410_SRC2_N	CK410_SRC2_N - @m42a_lib.M42A	5C7 32B4 33C5
CK410_SRC2_P	CK410_SRC2_P - @m42a_lib.M42A	5C7 32B4 33C5
CK410_SRC3_N	CK410_SRC3_N - @m42a_lib.M42A	6B4 32B4
	CK410_SRC3_N_SPN - @m42a_lib.M42A	5C7 6B3
CK410_SRC3_P	CK410_SRC3_P - @m42a_lib.M42A	6B4 32B4
	CK410_SRC3_P_SPN - @m42a_lib.M42A	5C7 6B3
CK410_SRC4_N	CK410_SRC4_N - @m42a_lib.M42A	5C7 32B4 33B5
CK410_SRC4_P	CK410_SRC4_P - @m42a_lib.M42A	5C7 32B4 33B5
CK410_SRC5_N	CK410_SRC5_N - @m42a_lib.M42A	5C7 32B4 33C5
CK410_SRC5_P	CK410_SRC5_P - @m42a_lib.M42A	5C7 32B4 33C5
CK410_SRC6_N	CK410_SRC6_N - @m42a_lib.M42A	5C7 32B4 33C5
CK410_SRC6_P	CK410_SRC6_P - @m42a_lib.M42A	5C7 32B4 33D5
CK410_SRC7_N	CK410_SRC7_N - @m42a_lib.M42A	6B4 32B4
	CK410_SRC7_N_SPN - @m42a_lib.M42A	5C7 6B3
CK410_SRC7_P	CK410_SRC7_P - @m42a_lib.M42A	6B4 32B4
	CK410_SRC7_P_SPN - @m42a_lib.M42A	5C7 6B3
CK410_SRC8_N	CK410_SRC8_N - @m42a_lib.M42A	5B7 32A4 33C5
CK410_SRC8_P	CK410_SRC8_P - @m42a_lib.M42A	5B7 32A4 33C5
CK410_SRC_CLKREQ1_L	CK410_SRC_CLKREQ1_L - @m42a_lib.M42A	6B4 32B4
	CK410_SRC_CLKREQ1_L_SPN - @m42a_lib.M42A	5B7 6B3
CK410_SRC_CLKREQ3_L	CK410_SRC_CLKREQ3_L - @m42a_lib.M42A	6B4 32B4
	CK410_SRC_CLKREQ3_L_SPN - @m42a_lib.M42A	5B7 6B3
CK410_SRC_CLKREQ6_L	CK410_SRC_CLKREQ6_L - @m42a_lib.M42A	32B4 43C6
CK410_SRC_CLKREQ8_L	CK410_SRC_CLKREQ8_L - @m42a_lib.M42A	5B7 32A4 33A5
CK410_USB48_FSA	CK410_USB48_FSA - @m42a_lib.M42A	32A4 33C8
CK410_XTAL_IN	CK410_XTAL_IN - @m42a_lib.M42A	32C6
CK410_XTAL_OUT	CK410_XTAL_OUT - @m42a_lib.M42A	32C6
CLK_NB_OE_L	CLK_NB_OE_L - @m42a_lib.M42A	14B6 32B4
CONN_GEYSER_ONOFF_FLTR_L	CONN_GEYSER_ONOFF_FLTR_L - @m42a_lib.M42A	40C6
CONN_GEYSER_USB_N	CONN_GEYSER_USB_N - @m42a_lib.M42A	40C6
CONN_GEYSER_USB_P	CONN_GEYSER_USB_P - @m42a_lib.M42A	40C6
CPUVCORE_ISENSE_CAL	CPUVCORE_ISENSE_CAL - @m42a_lib.M42A	48A5
CPU_A20M_L	CPU_A20M_L - @m42a_lib.M42A	7C8 21C4
CPU_BSEL<0>	CPU_BSEL<0> - @m42a_lib.M42A	7B4 33C6
CPU_BSEL<1>	CPU_BSEL<1> - @m42a_lib.M42A	7B4 33B6
CPU_BSEL<2>	CPU_BSEL<2> - @m42a_lib.M42A	7B4 33B6
CPU_BSEL_R<0>	CPU_BSEL_R<0> - @m42a_lib.M42A	33C7
CPU_BSEL_R<1>	CPU_BSEL_R<1> - @m42a_lib.M42A	33B7
CPU_BSEL_R<2>	CPU_BSEL_R<2> - @m42a_lib.M42A	33B7
CPU_COMP<0>	CPU_COMP<0> - @m42a_lib.M42A	7B3
CPU_COMP<1>	CPU_COMP<1> - @m42a_lib.M42A	7B3
CPU_COMP<2>	CPU_COMP<2> - @m42a_lib.M42A	7B3
CPU_COMP<3>	CPU_COMP<3> - @m42a_lib.M42A	7B3
CPU_DPRSTP_L	CPU_DPRSTP_L - @m42a_lib.M42A	7B3 21C4 58C7
CPU_DPSLP_L	CPU_DPSLP_L - @m42a_lib.M42A	7B3 21C4
CPU_FERR_L	CPU_FERR_L - @m42a_lib.M42A	7C8 21C2
CPU_GTLREF	CPU_GTLREF - @m42a_lib.M42A	7B4
CPU_IGNNE_L	CPU_IGNNE_L - @m42a_lib.M42A	7C8 21C4
CPU_INIT_L	CPU_INIT_L - @m42a_lib.M42A	7D6 21C4
CPU_INTR	CPU_INTR - @m42a_lib.M42A	7C8 21C4
CPU_ISENSE_OUT_R	CPU_ISENSE_OUT_R - @m42a_lib.M42A	48C3
CPU_ISENSE_R_N	CPU_ISENSE_R_N - @m42a_lib.M42A	48C3
CPU_ISENSE_R_P	CPU_ISENSE_R_P - @m42a_lib.M42A	48C3
CPU_NMI	CPU_NMI - @m42a_lib.M42A	7C8 21C4
CPU_PROCHOT_L	CPU_PROCHOT_L - @m42a_lib.M42A	7C6 46B5 46C2 58C8
CPU_PSI_L	CPU_PSI_L - @m42a_lib.M42A	7A3 58C7
CPU_PWRGD	CPU_PWRGD - @m42a_lib.M42A	7B3 21C4
CPU_RCIN_L	CPU_RCIN_L - @m42a_lib.M42A	21C4
CPU_SMI_L	CPU_SMI_L - @m42a_lib.M42A	7C8 21C4
CPU_STPCLK_L	CPU_STPCLK_L - @m42a_lib.M42A	7C8 21C4
CPU_TEST1	CPU_TEST1 - @m42a_lib.M42A	7B4
CPU_TEST2	CPU_TEST2 - @m42a_lib.M42A	7B4

CPU_THERMAL_SCREW_DOWN	CPU_THERMAL_SCREW_DOWN - @m42a_lib.M42A	6A8
CPU_THERMAL_SCREW_RIGHT	CPU_THERMAL_SCREW_RIGHT - @m42a_lib.M42A	6A7
CPU_THERMAL_SCREW_UP	CPU_THERMAL_SCREW_UP - @m42a_lib.M42A	6A7
CPU_THERMD_N	CPU_THERMD_N - @m42a_lib.M42A	7C6 10B6
CPU_THERMD_P	CPU_THERMD_P - @m42a_lib.M42A	7C6 10B6
CPU_THERMTRIP_R	CPU_THERMTRIP_R - @m42a_lib.M42A	21C2
CPU_VCCSENSE_N	CPU_VCCSENSE_N - @m42a_lib.M42A	8B6 58A4 58A5
CPU_VCCSENSE_P	CPU_VCCSENSE_P - @m42a_lib.M42A	8B6 58A4 58A5
CPU_VID<0>	CPU_VID<0> - @m42a_lib.M42A	8B7 9C3
CPU_VID<1>	CPU_VID<1> - @m42a_lib.M42A	8B7 9C3
CPU_VID<2>	CPU_VID<2> - @m42a_lib.M42A	8B7 9C3
CPU_VID<3>	CPU_VID<3> - @m42a_lib.M42A	8B7 9C3
CPU_VID<4>	CPU_VID<4> - @m42a_lib.M42A	8B7 9C3
CPU_VID<5>	CPU_VID<5> - @m42a_lib.M42A	8B7 9D3
CPU_VID<6>	CPU_VID<6> - @m42a_lib.M42A	8B7 9D3
CPU_VID_R<0>	CPU_VID_R<0> - @m42a_lib.M42A	9C2 58C7
CPU_VID_R<0..6>	CPU_VID_R<0..6> - @m42a_lib.M42A	58A4
CPU_VID_R<1>	CPU_VID_R<1> - @m42a_lib.M42A	9C2 58C7
CPU_VID_R<2>	CPU_VID_R<2> - @m42a_lib.M42A	9C2 58C7
CPU_VID_R<3>	CPU_VID_R<3> - @m42a_lib.M42A	9C2 58C7
CPU_VID_R<4>	CPU_VID_R<4> - @m42a_lib.M42A	9C2 58C7
CPU_VID_R<5>	CPU_VID_R<5> - @m42a_lib.M42A	9D2 58C7
CPU_VID_R<6>	CPU_VID_R<6> - @m42a_lib.M42A	9D2 58C7
CPU_XDP_CLK_N	CPU_XDP_CLK_N - @m42a_lib.M42A	11B3 33D2 33D3
CPU_XDP_CLK_P	CPU_XDP_CLK_P - @m42a_lib.M42A	11B3 33D2 33D3
CRB_SV_DET	CRB_SV_DET - @m42a_lib.M42A	23B6 23C3
CRT_BLUE	CRT_BLUE - @m42a_lib.M42A	13B5 69B8
CRT_DDC_CLK	CRT_DDC_CLK - @m42a_lib.M42A	13B5 69D7
CRT_DDC_DATA	CRT_DDC_DATA - @m42a_lib.M42A	13B5 69D7
CRT_GREEN	CRT_GREEN - @m42a_lib.M42A	13B5 69A8
CRT_HSYNC_LS	CRT_HSYNC_LS - @m42a_lib.M42A	69C2
CRT_HSYNC_LS_R	CRT_HSYNC_LS_R - @m42a_lib.M42A	69C3
CRT_HSYNC_R	CRT_HSYNC_R - @m42a_lib.M42A	13B5 69C3
CRT_IREF	CRT_IREF - @m42a_lib.M42A	13B5 69C8
CRT_RED	CRT_RED - @m42a_lib.M42A	13B5 69A8
CRT_VSYNC_LS	CRT_VSYNC_LS - @m42a_lib.M42A	69C2
CRT_VSYNC_LS_R	CRT_VSYNC_LS_R - @m42a_lib.M42A	69C3
CRT_VSYNC_R	CRT_VSYNC_R - @m42a_lib.M42A	13B5 69C3
DCIN_ISENSE	DCIN_ISENSE - @m42a_lib.M42A	66C3
DEBUG_RST_L	DEBUG_RST_L - @m42a_lib.M42A	5C2 26B1 47C6
DMI_IRCOMP_R	DMI_IRCOMP_R - @m42a_lib.M42A	22C2
DMI_N2S_N<0>	DMI_N2S_N<0> - @m42a_lib.M42A	14B4 22D2
DMI_N2S_N<1>	DMI_N2S_N<1> - @m42a_lib.M42A	14B4 22D2
DMI_N2S_N<2>	DMI_N2S_N<2> - @m42a_lib.M42A	14B4 22D2
DMI_N2S_N<3>	DMI_N2S_N<3> - @m42a_lib.M42A	14B4 22D2
DMI_N2S_P<0>	DMI_N2S_P<0> - @m42a_lib.M42A	14B4 22D2
DMI_N2S_P<1>	DMI_N2S_P<1> - @m42a_lib.M42A	14B4 22D2
DMI_N2S_P<2>	DMI_N2S_P<2> - @m42a_lib.M42A	14B4 22D2
DMI_N2S_P<3>	DMI_N2S_P<3> - @m42a_lib.M42A	14B4 22D2
DMI_S2N_N<0>	DMI_S2N_N<0> - @m42a_lib.M42A	14B4 22D2
DMI_S2N_N<1>	DMI_S2N_N<1> - @m42a_lib.M42A	14B4 22D2
DMI_S2N_N<2>	DMI_S2N_N<2> - @m42a_lib.M42A	14B4 22D2
DMI_S2N_N<3>	DMI_S2N_N<3> - @m42a_lib.M42A	14B4 22D2
DMI_S2N_P<0>	DMI_S2N_P<0> - @m42a_lib.M42A	14B4 22D2
DMI_S2N_P<1>	DMI_S2N_P<1> - @m42a_lib.M42A	14B4 22D2
DMI_S2N_P<2>	DMI_S2N_P<2> - @m42a_lib.M42A	14B4 22D2
DMI_S2N_P<3>	DMI_S2N_P<3> - @m42a_lib.M42A	14B4 22D2
ENETPWR_EN	ENETPWR_EN - @m42a_lib.M42A	60B5 60C5 60D4
ENET_BOB_SMITH_CAP	ENET_BOB_SMITH_CAP - @m42a_lib.M42A	37A5
ENET_CENTER_TAP<0>	ENET_CENTER_TAP<0> - @m42a_lib.M42A	37C6
ENET_CENTER_TAP<1>	ENET_CENTER_TAP<1> - @m42a_lib.M42A	37B6
ENET_CENTER_TAP<2>	ENET_CENTER_TAP<2> - @m42a_lib.M42A	37B6
ENET_CENTER_TAP<3>	ENET_CENTER_TAP<3> - @m42a_lib.M42A	37B6
ENET_CLK100M_PCIE_N	ENET_CLK100M_PCIE_N - @m42a_lib.M42A	33C3 33D2 36C6
ENET_CLK100M_PCIE_P	ENET_CLK100M_PCIE_P - @m42a_lib.M42A	33C3 33D2 36C6
ENET_CTRL12	ENET_CTRL12 - @m42a_lib.M42A	6A4 36C8
	ENET_CTRL12_SPN - @m42a_lib.M42A	6A3
ENET_CTRL25	ENET_CTRL25 - @m42a_lib.M42A	6A4 36C8
	ENET_CTRL25_SPN - @m42a_lib.M42A	6A3
ENET_LOM_DIS_L	ENET_LOM_DIS_L - @m42a_lib.M42A	36D8
ENET_MDI0	ENET_MDI0 - @m42a_lib.M42A	36B5
ENET_MDI1	ENET_MDI1 - @m42a_lib.M42A	36B4
ENET_MDI2	ENET_MDI2 - @m42a_lib.M42A	36B4
ENET_MDI3	ENET_MDI3 - @m42a_lib.M42A	36B3
ENET_MDI_N<0>	ENET_MDI_N<0> - @m42a_lib.M42A	36C3 37C8
ENET_MDI_N<1>	ENET_MDI_N<1> - @m42a_lib.M42A	36C3 37B8
ENET_MDI_N<2>	ENET_MDI_N<2> - @m42a_lib.M42A	36C3 37B8
ENET_MDI_N<3>	ENET_MDI_N<3> - @m42a_lib.M42A	36C3 37B8
ENET_MDI_P<0>	ENET_MDI_P<0> - @m42a_lib.M42A	36C3 37C8
ENET_MDI_P<1>	ENET_MDI_P<1> - @m42a_lib.M42A	36C3 37B8
ENET_MDI_P<2>	ENET_MDI_P<2> - @m42a_lib.M42A	36C3 37B8
ENET_MDI_P<3>	ENET_MDI_P<3> - @m42a_lib.M42A	36C3 37B8
ENET_MDI_TRAN_N<0>	ENET_MDI_TRAN_N<0> - @m42a_lib.M42A	37C5
ENET_MDI_TRAN_N<1>	ENET_MDI_TRAN_N<1> - @m42a_lib.M42A	37B5
ENET_MDI_TRAN_N<2>	ENET_MDI_TRAN_N<2> - @m42a_lib.M42A	5A7 37B5
ENET_MDI_TRAN_N<3>	ENET_MDI_TRAN_N<3> - @m42a_lib.M42A	37B5
ENET_MDI_TRAN_P<0>	ENET_MDI_TRAN_P<0> - @m42a_lib.M42A	37C5
ENET_MDI_TRAN_P<1>	ENET_MDI_TRAN_P<1> - @m42a_lib.M42A	37B5
ENET_MDI_TRAN_P<2>	ENET_MDI_TRAN_P<2> - @m42a_lib.M42A	5A7 37B5
ENET_MDI_TRAN_P<3>	ENET_MDI_TRAN_P<3> - @m42a_lib.M42A	5A7 37B5
ENET_PU_VDD_TTL0	ENET_PU_VDD_TTL0 - @m42a_lib.M42A	36A6 36C6
ENET_PU_VDD_TTL1	ENET_PU_VDD_TTL1 - @m42a_lib.M42A	36A6 36B6
ENET_RSET	ENET_RSET - @m42a_lib.M42A	36C8
ENET_RST_L	ENET_RST_L - @m42a_lib.M42A	26A1 36C6
ENET_VPD_CLK	ENET_VPD_CLK - @m42a_lib.M42A	36A2 36C6
ENET_VPD_DATA	ENET_VPD_DATA - @m42a_lib.M42A	36A2 36C6
ENET_XTALI	ENET_XTALI - @m42a_lib.M42A	36B6
ENET_XTALO	ENET_XTALO - @m42a_lib.M42A	36B6
EXTAUSB_OC_F_L	EXTAUSB_OC_F_L - @m42a_lib.M42A	42C8
EXTBUSB_OC_F_L	EXTBUSB_OC_F_L - @m42a_lib.M42A	42C8
EXT_COMPVID_B	EXT_COMPVID_B - @m42a_lib.M42A	69B6
EXT_C_R	EXT_C_R - @m42a_lib.M42A	69A6
EXT_Y_G	EXT_Y_G - @m42a_lib.M42A	69A6
FAN_RT_PWM	FAN_RT_PWM - @m42a_lib.M42A	5D2 51B3
FAN_RT_TACH	FAN_RT_TACH - @m42a_lib.M42A	5D2 51C3
FSB_ADSTB_L<0>	FSB_ADSTB_L<0> - @m42a_lib.M42A	7D8 12C4
FSB_ADSTB_L<1>	FSB_ADSTB_L<1> - @m42a_lib.M42A	7C8 12C4
FSB_ADS_L	FSB_ADS_L - @m42a_lib.M42A	7D6 12C4
FSB_A_L<3>	FSB_A_L<3> - @m42a_lib.M42A	7D8 12D4
FSB_A_L<4>	FSB_A_L<4> - @m42a_lib.M42A	7D8 12D4
FSB_A_L<5>	FSB_A_L<5> - @m42a_lib.M42A	7D8 12D4
FSB_A_L<6>	FSB_A_L<6> - @m42a_lib.M42A	7D8 12D4
FSB_A_L<7>	FSB_A_L<7> - @m42a_lib.M42A	7D8 12D4
FSB_A_L<8>	FSB_A_L<8> - @m42a_lib.M42A	7D8 12D4
FSB_A_L<9>	FSB_A_L<9> - @m42a_lib.M42A	7D8 12D4
FSB_A_L<10>	FSB_A_L<10> - @m42a_lib.M42A	7D8 12D4
FSB_A_L<11>	FSB_A_L<11> - @m42a_lib.M42A	7D8 12D4
FSB_A_L<12>	FSB_A_L<12> - @m42a_lib.M42A	7D8 12D4
FSB_A_L<13>	FSB_A_L<13> - @m42a_lib.M42A	7D8 12D4

FSB_A_L<14>	FSB_A_L<14> - @m42a_lib.M42A	7D8 12D4
FSB_A_L<15>	FSB_A_L<15> - @m42a_lib.M42A	7D8 12D4
FSB_A_L<16>	FSB_A_L<16> - @m42a_lib.M42A	7D8 12C4
FSB_A_L<17>	FSB_A_L<17> - @m42a_lib.M42A	7C8 12C4
FSB_A_L<18>	FSB_A_L<18> - @m42a_lib.M42A	7C8 12C4
FSB_A_L<19>	FSB_A_L<19> - @m42a_lib.M42A	7C8 12C4
FSB_A_L<20>	FSB_A_L<20> - @m42a_lib.M42A	7C8 12C4
FSB_A_L<21>	FSB_A_L<21> - @m42a_lib.M42A	7C8 12C4
FSB_A_L<22>	FSB_A_L<22> - @m42a_lib.M42A	7C8 12C4
FSB_A_L<23>	FSB_A_L<23> - @m42a_lib.M42A	7C8 12C4
FSB_A_L<24>	FSB_A_L<24> - @m42a_lib.M42A	7C8 12C4
FSB_A_L<25>	FSB_A_L<25> - @m42a_lib.M42A	7C8 12C4
FSB_A_L<26>	FSB_A_L<26> - @m42a_lib.M42A	7C8 12C4
FSB_A_L<27>	FSB_A_L<27> - @m42a_lib.M42A	7C8 12C4
FSB_A_L<28>	FSB_A_L<28> - @m42a_lib.M42A	7C8 12C4
FSB_A_L<29>	FSB_A_L<29> - @m42a_lib.M42A	7C8 12C4
FSB_A_L<30>	FSB_A_L<30> - @m42a_lib.M42A	7C8 12C4
FSB_A_L<31>	FSB_A_L<31> - @m42a_lib.M42A	7C8 12C4
FSB_BNR_L	FSB_BNR_L - @m42a_lib.M42A	7D6 12C4
FSB_BPRI_L	FSB_BPRI_L - @m42a_lib.M42A	7D6 12C4
FSB_BREQ0_L	FSB_BREQ0_L - @m42a_lib.M42A	7D6 12C4
FSB_CLK_CPU_N	FSB_CLK_CPU_N - @m42a_lib.M42A	7C6 33C2 33D3
FSB_CLK_CPU_P	FSB_CLK_CPU_P - @m42a_lib.M42A	7C6 33C2 33D3
FSB_CLK_NB_N	FSB_CLK_NB_N - @m42a_lib.M42A	12A6 33C2 33D3
FSB_CLK_NB_P	FSB_CLK_NB_P - @m42a_lib.M42A	12A6 33D2 33D3
FSB_CPURST_L	FSB_CPURST_L - @m42a_lib.M42A	7D6 11B5 12C4
FSB_DBSY_L	FSB_DBSY_L - @m42a_lib.M42A	7D6 12B4
FSB_DEFER_L	FSB_DEFER_L - @m42a_lib.M42A	7D6 12B4
FSB_DINV_L<0>	FSB_DINV_L<0> - @m42a_lib.M42A	7C4 12B4
FSB_DINV_L<1>	FSB_DINV_L<1> - @m42a_lib.M42A	7B4 12B4
FSB_DINV_L<2>	FSB_DINV_L<2> - @m42a_lib.M42A	7C3 12B4
FSB_DINV_L<3>	FSB_DINV_L<3> - @m42a_lib.M42A	7B3 12B4
FSB_DPWR_L	FSB_DPWR_L - @m42a_lib.M42A	7B3 12B4
FSB_DRDY_L	FSB_DRDY_L - @m42a_lib.M42A	7D6 12B4
FSB_DSTBN_L<0>	FSB_DSTBN_L<0> - @m42a_lib.M42A	7C4 12B4
FSB_DSTBN_L<1>	FSB_DSTBN_L<1> - @m42a_lib.M42A	7B4 12B4
FSB_DSTBN_L<2>	FSB_DSTBN_L<2> - @m42a_lib.M42A	7C3 12B4
FSB_DSTBN_L<3>	FSB_DSTBN_L<3> - @m42a_lib.M42A	7B3 12B4
FSB_DSTBP_L<0>	FSB_DSTBP_L<0> - @m42a_lib.M42A	7C4 12B4
FSB_DSTBP_L<1>	FSB_DSTBP_L<1> - @m42a_lib.M42A	7B4 12B4
FSB_DSTBP_L<2>	FSB_DSTBP_L<2> - @m42a_lib.M42A	7C3 12B4
FSB_DSTBP_L<3>	FSB_DSTBP_L<3> - @m42a_lib.M42A	7B3 12B4
FSB_D_L<0>	FSB_D_L<0> - @m42a_lib.M42A	7C4 12D6
FSB_D_L<1>	FSB_D_L<1> - @m42a_lib.M42A	7C4 12D6
FSB_D_L<2>	FSB_D_L<2> - @m42a_lib.M42A	7C4 12D6
FSB_D_L<3>	FSB_D_L<3> - @m42a_lib.M42A	7C4 12D6
FSB_D_L<4>	FSB_D_L<4> - @m42a_lib.M42A	7C4 12D6
FSB_D_L<5>	FSB_D_L<5> - @m42a_lib.M42A	7C4 12D6
FSB_D_L<6>	FSB_D_L<6> - @m42a_lib.M42A	7C4 12D6
FSB_D_L<7>	FSB_D_L<7> - @m42a_lib.M42A	7C4 12D6
FSB_D_L<8>	FSB_D_L<8> - @m42a_lib.M42A	7C4 12D6
FSB_D_L<9>	FSB_D_L<9> - @m42a_lib.M42A	7C4 12D6
FSB_D_L<10>	FSB_D_L<10> - @m42a_lib.M42A	7C4 12D6
FSB_D_L<11>	FSB_D_L<11> - @m42a_lib.M42A	7C4 12D6
FSB_D_L<12>	FSB_D_L<12> - @m42a_lib.M42A	7C4 12D6
FSB_D_L<13>	FSB_D_L<13> - @m42a_lib.M42A	7C4 12C6
FSB_D_L<14>	FSB_D_L<14> - @m42a_lib.M42A	7C4 12C6
FSB_D_L<15>	FSB_D_L<15> - @m42a_lib.M42A	7C4 12C6
FSB_D_L<16>	FSB_D_L<16> - @m42a_lib.M42A	7C4 12C6
FSB_D_L<17>	FSB_D_L<17> - @m42a_lib.M42A	7C4 12C6
FSB_D_L<18>	FSB_D_L<18> - @m42a_lib.M42A	7B4 12C6
FSB_D_L<19>	FSB_D_L<19> - @m42a_lib.M42A	7B4 12C6
FSB_D_L<20>	FSB_D_L<20> - @m42a_lib.M42A	7B4 12C6
FSB_D_L<21>	FSB_D_L<21> - @m42a_lib.M42A	7B4 12C6
FSB_D_L<22>	FSB_D_L<22> - @m42a_lib.M42A	7B4 12C6
FSB_D_L<23>	FSB_D_L<23> - @m42a_lib.M42A	7B4 12C6
FSB_D_L<24>	FSB_D_L<24> - @m42a_lib.M42A	7B4 12C6
FSB_D_L<25>	FSB_D_L<25> - @m42a_lib.M42A	7B4 12C6
FSB_D_L<26>	FSB_D_L<26> - @m42a_lib.M42A	7B4 12C6
FSB_D_L<27>	FSB_D_L<27> - @m42a_lib.M42A	7B4 12C6
FSB_D_L<28>	FSB_D_L<28> - @m42a_lib.M42A	7B4 12C6
FSB_D_L<29>	FSB_D_L<29> - @m42a_lib.M42A	7B4 12C6
FSB_D_L<30>	FSB_D_L<30> - @m42a_lib.M42A	7B4 12C6
FSB_D_L<31>	FSB_D_L<31> - @m42a_lib.M42A	7B4 12C6
FSB_D_L<32>	FSB_D_L<32> - @m42a_lib.M42A	7C3 12C6
FSB_D_L<33>	FSB_D_L<33> - @m42a_lib.M42A	7C3 12C6
FSB_D_L<34>	FSB_D_L<34> - @m42a_lib.M42A	7C3 12C6
FSB_D_L<35>	FSB_D_L<35> - @m42a_lib.M42A	7C3 12C6
FSB_D_L<36>	FSB_D_L<36> - @m42a_lib.M42A	7C3 12C6
FSB_D_L<37>	FSB_D_L<37> - @m42a_lib.M42A	7C3 12C6
FSB_D_L<38>	FSB_D_L<38> - @m42a_lib.M42A	7C3 12C6
FSB_D_L<39>	FSB_D_L<39> - @m42a_lib.M42A	7C3 12B6
FSB_D_L<40>	FSB_D_L<40> - @m42a_lib.M42A	7C3 12B6
FSB_D_L<41>	FSB_D_L<41> - @m42a_lib.M42A	7C3 12B6
FSB_D_L<42>	FSB_D_L<42> - @m42a_lib.M42A	7C3 12B6
FSB_D_L<43>	FSB_D_L<43> - @m42a_lib.M42A	7C3 12B6
FSB_D_L<44>	FSB_D_L<44> - @m42a_lib.M42A	7C3 12B6
FSB_D_L<45>	FSB_D_L<45> - @m42a_lib.M42A	7C3 12B6
FSB_D_L<46>	FSB_D_L<46> - @m42a_lib.M42A	7C3 12B6
FSB_D_L<47>	FSB_D_L<47> - @m42a_lib.M42A	7C3 12B6
FSB_D_L<48>	FSB_D_L<48> - @m42a_lib.M42A	7C3 12B6
FSB_D_L<49>	FSB_D_L<49> - @m42a_lib.M42A	7C3 12B6
FSB_D_L<50>	FSB_D_L<50> - @m42a_lib.M42A	7B3 12B6
FSB_D_L<51>	FSB_D_L<51> - @m42a_lib.M42A	7B3 12B6
FSB_D_L<52>	FSB_D_L<52> - @m42a_lib.M42A	7B3 12B6
FSB_D_L<53>	FSB_D_L<53> - @m42a_lib.M42A	7B3 12B6
FSB_D_L<54>	FSB_D_L<54> - @m42a_lib.M42A	7B3 12B6
FSB_D_L<55>	FSB_D_L<55> - @m42a_lib.M42A	7B3 12B6
FSB_D_L<56>	FSB_D_L<56> - @m42a_lib.M42A	7B3 12B6
FSB_D_L<57>	FSB_D_L<57> - @m42a_lib.M42A	7B3 12B6
FSB_D_L<58>	FSB_D_L<58> - @m42a_lib.M42A	7B3 12B6
FSB_D_L<59>	FSB_D_L<59> - @m42a_lib.M42A	7B3 12B6
FSB_D_L<60>	FSB_D_L<60> - @m42a_lib.M42A	7B3 12B6
FSB_D_L<61>	FSB_D_L<61> - @m42a_lib.M42A	7B3 12B6
FSB_D_L<62>	FSB_D_L<62> - @m42a_lib.M42A	7B3 12B6
FSB_D_L<63>	FSB_D_L<63> - @m42a_lib.M42A	7B3 12B6
FSB_HITM_L	FSB_HITM_L - @m42a_lib.M42A	7D6 12B4
FSB_HIT_L	FSB_HIT_L - @m42a_lib.M42A	7D6 12B4
FSB_IERR_L	FSB_IERR_L - @m42a_lib.M42A	7D6
FSB_LOCK_L	FSB_LOCK_L - @m42a_lib.M42A	7D6 12B4
FSB_REQ_L<0>	FSB_REQ_L<0> - @m42a_lib.M42A	7D8 12B4
FSB_REQ_L<1>	FSB_REQ_L<1> - @m42a_lib.M42A	7D8 12B4
FSB_REQ_L<2>	FSB_REQ_L<2> - @m42a_lib.M42A	7D8 12A4
FSB_REQ_L<3>	FSB_REQ_L<3> - @m42a_lib.M42A	7D8 12A4
FSB_REQ_L<4>	FSB_REQ_L<4> - @m42a_lib.M42A	7D8 12A4
FSB_RS_L<0>	FSB_RS_L<0> - @m42a_lib.M42A	7D6 12A4
FSB_RS_L<1>	FSB_RS_L<1> - @m42a_lib.M42A	7D6 12A4
FSB_RS_L<2>	FSB_RS_L<2> - @m42a_lib.M42A	7D6 12A4
FSB_SLPCPU_L	FSB_SLPCPU_L - @m42a_lib.M42A	7A3 12A4
FSB_TRDY_L	FSB_TRDY_L - @m42a_lib.M42A	7D6 12A4
FWH_INIT_L	FWH_INIT_L - @m42a_lib.M42A	5C2 6B2 21C4 47C5
	SMC_CPU_INIT_3_3_L - @m42a_lib.M42A	6B1 45D5
FWH_MFG_MODE	FWH_MFG_MODE - @m42a_lib.M42A	23A6 23C5
FWPWR_ACIN	FWPWR_ACIN - @m42a_lib.M42A	39C6

www.laptopblue.vn

FWPWR_EN	FWPWR_EN - @m42a_lib.M42A	39C5
FWPWR_EN_L	FWPWR_EN_L - @m42a_lib.M42A	39C4 60C8
FWPWR_EN_L_DIV	FWPWR_EN_L_DIV - @m42a_lib.M42A	39C5
FWPWR_EN_L_R	FWPWR_EN_L_R - @m42a_lib.M42A	60C7
FWPWR_RUN	FWPWR_RUN - @m42a_lib.M42A	39C6
FW_A_TPA_N	FW_A_TPA_N - @m42a_lib.M42A	38B3 39B6
	FW_PORT0_TPA_N - @m42a_lib.M42A	39B5
FW_A_TPA_P	FW_A_TPA_P - @m42a_lib.M42A	38B3 39B6
	FW_PORT0_TPA_P - @m42a_lib.M42A	39B5
FW_A_TPBIAS	FW_A_TPBIAS - @m42a_lib.M42A	38B3 39B6
FW_A_TPB_N	FW_A_TPB_N - @m42a_lib.M42A	38B3 39B6
	FW_PORT0_TPB_N - @m42a_lib.M42A	39B5
FW_A_TPB_P	FW_A_TPB_P - @m42a_lib.M42A	38B3 39B6
	FW_PORT0_TPB_P - @m42a_lib.M42A	39B5
FW_B_TPA_N	FW_B_TPA_N - @m42a_lib.M42A	6D2 38B3
	FW_B_TPA_N_SPN - @m42a_lib.M42A	5B7 6D1
FW_B_TPA_P	FW_B_TPA_P - @m42a_lib.M42A	6D2 38B3
	FW_B_TPA_P_SPN - @m42a_lib.M42A	5B7 6D1
FW_B_TPBIAS	FW_B_TPBIAS - @m42a_lib.M42A	6D2 38B3
	FW_B_TPBIAS_SPN - @m42a_lib.M42A	5B7 6D1
FW_B_TPB_N	FW_B_TPB_N - @m42a_lib.M42A	6D2 38B3
	FW_B_TPB_N_SPN - @m42a_lib.M42A	5B7 6D1
FW_B_TPB_P	FW_B_TPB_P - @m42a_lib.M42A	6D2 38B3
	FW_B_TPB_P_SPN - @m42a_lib.M42A	5B7 6D1
FW_C_TPA_N	FW_C_TPA_N - @m42a_lib.M42A	6D2 38B3
	FW_C_TPA_N_SPN - @m42a_lib.M42A	5B7 6D1
FW_C_TPA_P	FW_C_TPA_P - @m42a_lib.M42A	6D2 38B3
	FW_C_TPA_P_SPN - @m42a_lib.M42A	5B7 6D1
FW_C_TPBIAS	FW_C_TPBIAS - @m42a_lib.M42A	6D2 38B3
	FW_C_TPBIAS_SPN - @m42a_lib.M42A	5B7 6D1
FW_C_TPB_N	FW_C_TPB_N - @m42a_lib.M42A	6D2 38B3
	FW_C_TPB_N_SPN - @m42a_lib.M42A	5B7 6D1
FW_C_TPB_P	FW_C_TPB_P - @m42a_lib.M42A	6D2 38B3
	FW_C_TPB_P_SPN - @m42a_lib.M42A	5B7 6D1
FW_PCI_IDSEL	FW_PCI_IDSEL - @m42a_lib.M42A	38A5
FW_PCI_RST_L	FW_PCI_RST_L - @m42a_lib.M42A	38A5
FW_PORT0_TPA_N_FL	FW_PORT0_TPA_N_FL - @m42a_lib.M42A	39B2
FW_PORT0_TPA_P_FL	FW_PORT0_TPA_P_FL - @m42a_lib.M42A	39B2
FW_PORT0_TPB	FW_PORT0_TPB - @m42a_lib.M42A	39A5
FW_PORT0_TPB_N_FL	FW_PORT0_TPB_N_FL - @m42a_lib.M42A	39B2
FW_PORT0_TPB_P_FL	FW_PORT0_TPB_P_FL - @m42a_lib.M42A	39B2
FW_PWRON_RST_L	FW_PWRON_RST_L - @m42a_lib.M42A	38C3
FW_R0	FW_R0 - @m42a_lib.M42A	38B3
FW_R1	FW_R1 - @m42a_lib.M42A	38C3
FW_XI	FW_XI - @m42a_lib.M42A	38C3
FW_XO	FW_XO - @m42a_lib.M42A	38C3
FW_XO_R	FW_XO_R - @m42a_lib.M42A	38C3
GEYSER_GND_F	GEYSER_GND_F - @m42a_lib.M42A	40C5
GND_1V8S3_SGND	GND_1V8S3_SGND - @m42a_lib.M42A	61B5 61C6
GND_1V51V05S0_SGND	GND_1V51V05S0_SGND - @m42a_lib.M42A	62B7
GND_5V3V3S5_SGND	GND_5V3V3S5_SGND - @m42a_lib.M42A	59B7
GND_AUDIO_CODEC	GND_AUDIO_CODEC - @m42a_lib.M42A	5D1 64B2
	=GND_AUDIO_CODEC - @m42a_lib.M42A	54A6 54B6 54D2 55A8 55B8
		55C8 56B3 56B5 57A5 57A6
		57B3 57B3 57B5 57B8 57C3
		57C5 57C8 57D8 64B3
GND_AUDIO_PWR	GND_AUDIO_PWR - @m42a_lib.M42A	5D1 64B2
	=GND_AUDIO_PWR - @m42a_lib.M42A	55A3 55A5 55A8 55B3 55B3
		55B8 55C3 55C3 55C8 55D3
		55D8 56C2 64B3
GND_AUDIO_SPDIF_DGND	GND_AUDIO_SPDIF_DGND - @m42a_lib.M42A	56A8 56C8
GND_BT_F	GND_BT_F - @m42a_lib.M42A	44B4
GND_CHASSIS_CPU	GND_CHASSIS_CPU - @m42a_lib.M42A	6B8
GND_CHASSIS_FANSCREW	GND_CHASSIS_FANSCREW - @m42a_lib.M42A	6B8
GND_CHGR_SGND	GND_CHGR_SGND - @m42a_lib.M42A	66A5 66B7
GND_IMVP6_SGND	GND_IMVP6_SGND - @m42a_lib.M42A	58A4 58B7 58C8
GND_SMC_AVSS	GND_SMC_AVSS - @m42a_lib.M42A	45C2 45C4 46B6 48A1 48B5
		48C1 61C1 62A5 66B1 66C2
GND_SMC_LID_F	GND_SMC_LID_F - @m42a_lib.M42A	65A7
GPU_CRT_DDC_CLK	GPU_CRT_DDC_CLK - @m42a_lib.M42A	69B6 69D5
GPU_CRT_DDC_DATA	GPU_CRT_DDC_DATA - @m42a_lib.M42A	69B6 69D5
IDE_CSEL_PD	IDE_CSEL_PD - @m42a_lib.M42A	34B4
IDE_IRQ14	IDE_IRQ14 - @m42a_lib.M42A	21B6 34B6
IDE_PDA<0>	IDE_PDA<0> - @m42a_lib.M42A	21B5 34B5
IDE_PDA<1>	IDE_PDA<1> - @m42a_lib.M42A	21B5 34B5
IDE_PDA<2>	IDE_PDA<2> - @m42a_lib.M42A	21B5 34B3
IDE_PDCS1_L	IDE_PDCS1_L - @m42a_lib.M42A	21B5 34B5
IDE_PDCS3_L	IDE_PDCS3_L - @m42a_lib.M42A	21B5 34B3
IDE_PDD<0>	IDE_PDD<0> - @m42a_lib.M42A	21C5 34C5
IDE_PDD<1>	IDE_PDD<1> - @m42a_lib.M42A	21B5 34C5
IDE_PDD<2>	IDE_PDD<2> - @m42a_lib.M42A	21B5 34C5
IDE_PDD<3>	IDE_PDD<3> - @m42a_lib.M42A	21B5 34C5
IDE_PDD<4>	IDE_PDD<4> - @m42a_lib.M42A	21B5 34C5
IDE_PDD<5>	IDE_PDD<5> - @m42a_lib.M42A	21B5 34C5
IDE_PDD<6>	IDE_PDD<6> - @m42a_lib.M42A	21B5 34C5
IDE_PDD<7>	IDE_PDD<7> - @m42a_lib.M42A	21B5 34C5
IDE_PDD<8>	IDE_PDD<8> - @m42a_lib.M42A	21B5 34C3
IDE_PDD<9>	IDE_PDD<9> - @m42a_lib.M42A	21B5 34C3
IDE_PDD<10>	IDE_PDD<10> - @m42a_lib.M42A	21B5 34C3
IDE_PDD<11>	IDE_PDD<11> - @m42a_lib.M42A	21B5 34C3
IDE_PDD<12>	IDE_PDD<12> - @m42a_lib.M42A	21B5 34C3
IDE_PDD<13>	IDE_PDD<13> - @m42a_lib.M42A	21B5 34C3
IDE_PDD<14>	IDE_PDD<14> - @m42a_lib.M42A	21B5 34C3
IDE_PDD<15>	IDE_PDD<15> - @m42a_lib.M42A	21B5 34C3
IDE_PDDACK_L	IDE_PDDACK_L - @m42a_lib.M42A	21B6 34B3
IDE_PDDREQ	IDE_PDDREQ - @m42a_lib.M42A	21B6 34B6
IDE_PDIORDY	IDE_PDIORDY - @m42a_lib.M42A	21B6 34B6
IDE_PDIOR_L	IDE_PDIOR_L - @m42a_lib.M42A	21B6 34C3
IDE_PDIOW_L	IDE_PDIOW_L - @m42a_lib.M42A	21B6 34B5
IDE_RESET_L	IDE_RESET_L - @m42a_lib.M42A	23A3 34C5
IMVP6_BOOT1	IMVP6_BOOT1 - @m42a_lib.M42A	58A8 58C6
IMVP6_BOOT1_RC	IMVP6_BOOT1_RC - @m42a_lib.M42A	58D5
IMVP6_BOOT2	IMVP6_BOOT2 - @m42a_lib.M42A	58A6 58C6
IMVP6_BOOT2_RC	IMVP6_BOOT2_RC - @m42a_lib.M42A	58C5
IMVP6_COMP	IMVP6_COMP - @m42a_lib.M42A	5D7 58A4 58B7
IMVP6_COMP_RC	IMVP6_COMP_RC - @m42a_lib.M42A	58B8
IMVP6_CPU_ISENSE_N	IMVP6_CPU_ISENSE_N - @m42a_lib.M42A	48C4
IMVP6_CPU_ISENSE_P	IMVP6_CPU_ISENSE_P - @m42a_lib.M42A	48D4
IMVP6_DFB	IMVP6_DFB - @m42a_lib.M42A	58A4 58B6
IMVP6_DROOP	IMVP6_DROOP - @m42a_lib.M42A	48D5 58A4 58B6
IMVP6_FB	IMVP6_FB - @m42a_lib.M42A	58A4 58B7
IMVP6_FB2	IMVP6_FB2 - @m42a_lib.M42A	58A4 58B7
IMVP6_FET_RC1	IMVP6_FET_RC1 - @m42a_lib.M42A	58A8 58C2
IMVP6_FET_RC2	IMVP6_FET_RC2 - @m42a_lib.M42A	58A6 58B2
IMVP6_ISEN1	IMVP6_ISEN1 - @m42a_lib.M42A	58A8 58C6
IMVP6_ISEN2	IMVP6_ISEN2 - @m42a_lib.M42A	58A6 58C6
IMVP6_LGATE1	IMVP6_LGATE1 - @m42a_lib.M42A	58A8 58C6
IMVP6_LGATE2	IMVP6_LGATE2 - @m42a_lib.M42A	58A6 58C6
IMVP6_NTC	IMVP6_NTC - @m42a_lib.M42A	58C7
IMVP6_NTC_R	IMVP6_NTC_R - @m42a_lib.M42A	58C7
IMVP6_OCSET	IMVP6_OCSET - @m42a_lib.M42A	58A4 58B6
IMVP6_PHASE1	IMVP6_PHASE1 - @m42a_lib.M42A	58A8 58C6

IMVP6_PHASE2	IMVP6_PHASE2 - @m42a_lib.M42A	58A6 58C6
IMVP6_RBIAS	IMVP6_RBIAS - @m42a_lib.M42A	5D7 58A4 58B7
IMVP6_RTN	IMVP6_RTN - @m42a_lib.M42A	58A4 58B6
IMVP6_SOFT	IMVP6_SOFT - @m42a_lib.M42A	58A4 58C7
IMVP6_UGATE1	IMVP6_UGATE1 - @m42a_lib.M42A	58A8 58C6
IMVP6_UGATE2	IMVP6_UGATE2 - @m42a_lib.M42A	58A6 58C6
IMVP6_VDIFF	IMVP6_VDIFF - @m42a_lib.M42A	58A4 58B7
IMVP6_VDIFF_RC	IMVP6_VDIFF_RC - @m42a_lib.M42A	58B7
IMVP6_VO	IMVP6_VO - @m42a_lib.M42A	48C5 58A4 58B6
IMVP6_VO_R	IMVP6_VO_R - @m42a_lib.M42A	58B4
IMVP6_VO_R1	IMVP6_VO_R1 - @m42a_lib.M42A	58A8
IMVP6_VO_R2	IMVP6_VO_R2 - @m42a_lib.M42A	58A6
IMVP6_VR_TT	IMVP6_VR_TT - @m42a_lib.M42A	58C7
IMVP6_VSEN	IMVP6_VSEN - @m42a_lib.M42A	58A4 58B5
IMVP6_VSUM	IMVP6_VSUM - @m42a_lib.M42A	58A4 58C6
IMVP6_VSUM_R1	IMVP6_VSUM_R1 - @m42a_lib.M42A	58A8
IMVP6_VSUM_R2	IMVP6_VSUM_R2 - @m42a_lib.M42A	58A6
IMVP6_VW	IMVP6_VW - @m42a_lib.M42A	58A4 58B7
IMVP_DPRSLPVR	IMVP_DPRSLPVR - @m42a_lib.M42A	58C7
IMVP_VR_ON	IMVP_VR_ON - @m42a_lib.M42A	45D8 58C7
INT_PIRQA_L	INT_PIRQA_L - @m42a_lib.M42A	22A7 26C3
INT_PIRQB_L	INT_PIRQB_L - @m42a_lib.M42A	22A7 26C3
INT_PIRQC_L	INT_PIRQC_L - @m42a_lib.M42A	22A7 26C3
INT_PIRQD_L	INT_PIRQD_L - @m42a_lib.M42A	22A7 26C3 38A5
INT_SERIRQ	INT_SERIRQ - @m42a_lib.M42A	5C2 23C8 45C8 47C5 53C6
INVT_CHGND	INVT_CHGND - @m42a_lib.M42A	6D8 67C2
INV_BKLIGHT_PWM_L	INV_BKLIGHT_PWM_L - @m42a_lib.M42A	5B1 67D2
INV_GND	INV_GND - @m42a_lib.M42A	5B1 67D2
INV_PWREN_F_L	INV_PWREN_F_L - @m42a_lib.M42A	67D6
INV_PWREN_L	INV_PWREN_L - @m42a_lib.M42A	67D6
IR_RX_OUT	IR_RX_OUT - @m42a_lib.M42A	35C6 41C6
IR_RX_OUT_F	IR_RX_OUT_F - @m42a_lib.M42A	41C5
ISENSE_CAL_EN	ISENSE_CAL_EN - @m42a_lib.M42A	45B8 48A8
ISENSE_CAL_EN_L	ISENSE_CAL_EN_L - @m42a_lib.M42A	48A7
ISENSE_CAL_EN_LS5V	ISENSE_CAL_EN_LS5V - @m42a_lib.M42A	48A6
ITPRESET_L	ITPRESET_L - @m42a_lib.M42A	11B3
ITP_TDO	ITP_TDO - @m42a_lib.M42A	11B3
J2900_SA1	J2900_SA1 - @m42a_lib.M42A	29A4
KBC_MDE	KBC_MDE - @m42a_lib.M42A	45C2
LCDVDD_PWREN_L	LCDVDD_PWREN_L - @m42a_lib.M42A	67B7
LCDVDD_PWREN_L_R	LCDVDD_PWREN_L_R - @m42a_lib.M42A	67B6
LPC_AD<0>	LPC_AD<0> - @m42a_lib.M42A	5D2 21D4 45D8 47C6 53C6
LPC_AD<1>	LPC_AD<1> - @m42a_lib.M42A	5D2 21D4 45D8 47C6 53C6
LPC_AD<2>	LPC_AD<2> - @m42a_lib.M42A	5C2 21D4 45D8 47C5 53C6
LPC_AD<3>	LPC_AD<3> - @m42a_lib.M42A	5C2 21D4 45D8 47C5 53C6
LPC_FRAME_L	LPC_FRAME_L - @m42a_lib.M42A	5C2 21C5 45C8 47C6 53C6
LVDS_A_CLK_N	LVDS_A_CLK_N - @m42a_lib.M42A	13D5 67B2
LVDS_A_CLK_P	LVDS_A_CLK_P - @m42a_lib.M42A	13C5 67B2
LVDS_A_DATA_N<0>	LVDS_A_DATA_N<0> - @m42a_lib.M42A	13C5 67B2
LVDS_A_DATA_N<1>	LVDS_A_DATA_N<1> - @m42a_lib.M42A	13C5 67B2
LVDS_A_DATA_N<2>	LVDS_A_DATA_N<2> - @m42a_lib.M42A	13C5 67B2
LVDS_A_DATA_P<0>	LVDS_A_DATA_P<0> - @m42a_lib.M42A	13C5 67B2
LVDS_A_DATA_P<1>	LVDS_A_DATA_P<1> - @m42a_lib.M42A	13C5 67B2
LVDS_A_DATA_P<2>	LVDS_A_DATA_P<2> - @m42a_lib.M42A	13C5 67B2
LVDS_BKLTCTL	LVDS_BKLTCTL - @m42a_lib.M42A	13D5 67C6
LVDS_BKLTEN	LVDS_BKLTEN - @m42a_lib.M42A	13D5 67D7
LVDS_B_CLK_N	LVDS_B_CLK_N - @m42a_lib.M42A	6D6 13C5
	LVDS_B_CLK_N_SPN - @m42a_lib.M42A	5A7 6D5
LVDS_B_CLK_P	LVDS_B_CLK_P - @m42a_lib.M42A	6D6 13C5
	LVDS_B_CLK_P_SPN - @m42a_lib.M42A	5A7 6D5
LVDS_B_DATA_N<0>	LVDS_B_DATA_N<0> - @m42a_lib.M42A	6D6 13C5
	LVDS_B_DATA_N0_SPN - @m42a_lib.M42A	5A7 6D5
LVDS_B_DATA_N<1>	LVDS_B_DATA_N<1> - @m42a_lib.M42A	6D6 13C5
	LVDS_B_DATA_N1_SPN - @m42a_lib.M42A	5A7 6D5
LVDS_B_DATA_N<2>	LVDS_B_DATA_N<2> - @m42a_lib.M42A	6D6 13C5
	LVDS_B_DATA_N2_SPN - @m42a_lib.M42A	5A7 6D5
LVDS_B_DATA_P<0>	LVDS_B_DATA_P<0> - @m42a_lib.M42A	6D6 13C5
	LVDS_B_DATA_P0_SPN - @m42a_lib.M42A	6D5
LVDS_B_DATA_P<1>	LVDS_B_DATA_P<1> - @m42a_lib.M42A	6D6 13C5
	LVDS_B_DATA_P1_SPN - @m42a_lib.M42A	5A7 6D5
LVDS_B_DATA_P<2>	LVDS_B_DATA_P<2> - @m42a_lib.M42A	6D6 13C5
	LVDS_B_DATA_P2_SPN - @m42a_lib.M42A	5A7 6D5
LVDS_CLKCTLA	LVDS_CLKCTLA - @m42a_lib.M42A	13D5 67A7
LVDS_CLKCTLB	LVDS_CLKCTLB - @m42a_lib.M42A	13D5 67A7
LVDS_DDC_CLK	LVDS_DDC_CLK - @m42a_lib.M42A	13D5 67B6
LVDS_DDC_DATA	LVDS_DDC_DATA - @m42a_lib.M42A	13D5 67B6
LVDS_IBG	LVDS_IBG - @m42a_lib.M42A	13D5 67A6
LVDS_VDDEN	LVDS_VDDEN - @m42a_lib.M42A	13D5 67B7
MAX9705_L_N	MAX9705_L_N - @m42a_lib.M42A	55B6
MAX9705_R_N	MAX9705_R_N - @m42a_lib.M42A	55C6
MAX9705_SUB_N	MAX9705_SUB_N - @m42a_lib.M42A	55A6
MAX9890_CEXT	MAX9890_CEXT - @m42a_lib.M42A	57B1
MAX9890_INL	MAX9890_INL - @m42a_lib.M42A	57B2
MAX9890_INR	MAX9890_INR - @m42a_lib.M42A	57B2
MEMVTT_EN	MEMVTT_EN - @m42a_lib.M42A	31B5
MEMVTT_VREF	MEMVTT_VREF - @m42a_lib.M42A	31C4
MEM_A_A<0>	MEM_A_A<0> - @m42a_lib.M42A	15C5 28B4
MEM_A_A<13..0>	MEM_A_A<13..0> - @m42a_lib.M42A	30C6
MEM_A_A<1>	MEM_A_A<1> - @m42a_lib.M42A	15C5 28B6
MEM_A_A<2>	MEM_A_A<2> - @m42a_lib.M42A	15C5 28B4
MEM_A_A<3>	MEM_A_A<3> - @m42a_lib.M42A	15B5 28B6
MEM_A_A<4>	MEM_A_A<4> - @m42a_lib.M42A	15B5 28B4
MEM_A_A<5>	MEM_A_A<5> - @m42a_lib.M42A	15B5 28B6
MEM_A_A<6>	MEM_A_A<6> - @m42a_lib.M42A	15B5 28C4
MEM_A_A<7>	MEM_A_A<7> - @m42a_lib.M42A	15B5 28C4
MEM_A_A<8>	MEM_A_A<8> - @m42a_lib.M42A	15B5 28C6
MEM_A_A<9>	MEM_A_A<9> - @m42a_lib.M42A	15B5 28C6
MEM_A_A<10>	MEM_A_A<10> - @m42a_lib.M42A	15B5 28B6
MEM_A_A<11>	MEM_A_A<11> - @m42a_lib.M42A	15B5 28C4
MEM_A_A<12>	MEM_A_A<12> - @m42a_lib.M42A	15B5 28C6
MEM_A_A<13>	MEM_A_A<13> - @m42a_lib.M42A	15B5 28B4
MEM_A_A<14>	MEM_A_A<14> - @m42a_lib.M42A	6A4 28C4
	MEM_A_A14_SPN - @m42a_lib.M42A	6A3
MEM_A_A<15>	MEM_A_A<15> - @m42a_lib.M42A	6A4 28C4
	MEM_A_A15_SPN - @m42a_lib.M42A	6A3
MEM_A_BS<0>	MEM_A_BS<0> - @m42a_lib.M42A	15D5 28B6
MEM_A_BS<2..0>	MEM_A_BS<2..0> - @m42a_lib.M42A	30C6
MEM_A_BS<1>	MEM_A_BS<1> - @m42a_lib.M42A	15D5 28B4
MEM_A_BS<2>	MEM_A_BS<2> - @m42a_lib.M42A	15D5 28C6
MEM_A_CAS_L	MEM_A_CAS_L - @m42a_lib.M42A	15D5 28B6 30B6
MEM_A_DM<0>	MEM_A_DM<0> - @m42a_lib.M42A	15D5 28D4
MEM_A_DM<1>	MEM_A_DM<1> - @m42a_lib.M42A	15D5 28D4
MEM_A_DM<2>	MEM_A_DM<2> - @m42a_lib.M42A	15D5 28C6
MEM_A_DM<3>	MEM_A_DM<3> - @m42a_lib.M42A	15C5 28C4
MEM_A_DM<4>	MEM_A_DM<4> - @m42a_lib.M42A	15C5 28B4
MEM_A_DM<5>	MEM_A_DM<5> - @m42a_lib.M42A	15C5 28B6
MEM_A_DM<6>	MEM_A_DM<6> - @m42a_lib.M42A	15C5 28A6
MEM_A_DM<7>	MEM_A_DM<7> - @m42a_lib.M42A	15C5 28A4
MEM_A_DQ<0>	MEM_A_DQ<0> - @m42a_lib.M42A	15D7 28D4
MEM_A_DQ<1>	MEM_A_DQ<1> - @m42a_lib.M42A	15D7 28D4
MEM_A_DQ<2>	MEM_A_DQ<2> - @m42a_lib.M42A	15D7 28D6
MEM_A_DQ<3>	MEM_A_DQ<3> - @m42a_lib.M42A	15D7 28D6
MEM_A_DQ<4>	MEM_A_DQ<4> - @m42a_lib.M42A	15D7 28D4
MEM_A_DQ<5>	MEM_A_DQ<5> - @m42a_lib.M42A	15D7 28D4

MEM_A_DQ<6>	MEM_A_DQ<6> - @m42a_lib.M42A	15D7 28D6
MEM_A_DQ<7>	MEM_A_DQ<7> - @m42a_lib.M42A	15D7 28D6
MEM_A_DQ<8>	MEM_A_DQ<8> - @m42a_lib.M42A	15C7 28D6
MEM_A_DQ<9>	MEM_A_DQ<9> - @m42a_lib.M42A	15C7 28D6
MEM_A_DQ<10>	MEM_A_DQ<10> - @m42a_lib.M42A	15C7 28D6
MEM_A_DQ<11>	MEM_A_DQ<11> - @m42a_lib.M42A	15C7 28D4
MEM_A_DQ<12>	MEM_A_DQ<12> - @m42a_lib.M42A	15C7 28D4
MEM_A_DQ<13>	MEM_A_DQ<13> - @m42a_lib.M42A	15C7 28D6
MEM_A_DQ<14>	MEM_A_DQ<14> - @m42a_lib.M42A	15C7 28D4
MEM_A_DQ<15>	MEM_A_DQ<15> - @m42a_lib.M42A	15C7 28D4
MEM_A_DQ<16>	MEM_A_DQ<16> - @m42a_lib.M42A	15C7 28C4
MEM_A_DQ<17>	MEM_A_DQ<17> - @m42a_lib.M42A	15C7 28C6
MEM_A_DQ<18>	MEM_A_DQ<18> - @m42a_lib.M42A	15C7 28C4
MEM_A_DQ<19>	MEM_A_DQ<19> - @m42a_lib.M42A	15C7 28C6
MEM_A_DQ<20>	MEM_A_DQ<20> - @m42a_lib.M42A	15C7 28C6
MEM_A_DQ<21>	MEM_A_DQ<21> - @m42a_lib.M42A	15C7 28C4
MEM_A_DQ<22>	MEM_A_DQ<22> - @m42a_lib.M42A	15C7 28C6
MEM_A_DQ<23>	MEM_A_DQ<23> - @m42a_lib.M42A	15C7 28C4
MEM_A_DQ<24>	MEM_A_DQ<24> - @m42a_lib.M42A	15C7 28D6
MEM_A_DQ<25>	MEM_A_DQ<25> - @m42a_lib.M42A	15C7 28C6
MEM_A_DQ<26>	MEM_A_DQ<26> - @m42a_lib.M42A	15C7 28C4
MEM_A_DQ<27>	MEM_A_DQ<27> - @m42a_lib.M42A	15C7 28C6
MEM_A_DQ<28>	MEM_A_DQ<28> - @m42a_lib.M42A	15C7 28C4
MEM_A_DQ<29>	MEM_A_DQ<29> - @m42a_lib.M42A	15C7 28D4
MEM_A_DQ<30>	MEM_A_DQ<30> - @m42a_lib.M42A	15C7 28C4
MEM_A_DQ<31>	MEM_A_DQ<31> - @m42a_lib.M42A	15C7 28C6
MEM_A_DQ<32>	MEM_A_DQ<32> - @m42a_lib.M42A	15C7 28B6
MEM_A_DQ<33>	MEM_A_DQ<33> - @m42a_lib.M42A	15C7 28B4
MEM_A_DQ<34>	MEM_A_DQ<34> - @m42a_lib.M42A	15B7 28B4
MEM_A_DQ<35>	MEM_A_DQ<35> - @m42a_lib.M42A	15B7 28B4
MEM_A_DQ<36>	MEM_A_DQ<36> - @m42a_lib.M42A	15B7 28B4
MEM_A_DQ<37>	MEM_A_DQ<37> - @m42a_lib.M42A	15B7 28B6
MEM_A_DQ<38>	MEM_A_DQ<38> - @m42a_lib.M42A	15B7 28B6
MEM_A_DQ<39>	MEM_A_DQ<39> - @m42a_lib.M42A	15B7 28B6
MEM_A_DQ<40>	MEM_A_DQ<40> - @m42a_lib.M42A	15B7 28B4
MEM_A_DQ<41>	MEM_A_DQ<41> - @m42a_lib.M42A	15B7 28B6
MEM_A_DQ<42>	MEM_A_DQ<42> - @m42a_lib.M42A	15B7 28A4
MEM_A_DQ<43>	MEM_A_DQ<43> - @m42a_lib.M42A	15B7 28A6
MEM_A_DQ<44>	MEM_A_DQ<44> - @m42a_lib.M42A	15B7 28B6
MEM_A_DQ<45>	MEM_A_DQ<45> - @m42a_lib.M42A	15B7 28B4
MEM_A_DQ<46>	MEM_A_DQ<46> - @m42a_lib.M42A	15B7 28A4
MEM_A_DQ<47>	MEM_A_DQ<47> - @m42a_lib.M42A	15B7 28A6
MEM_A_DQ<48>	MEM_A_DQ<48> - @m42a_lib.M42A	15B7 28A6
MEM_A_DQ<49>	MEM_A_DQ<49> - @m42a_lib.M42A	15B7 28A6
MEM_A_DQ<50>	MEM_A_DQ<50> - @m42a_lib.M42A	15B7 28A4
MEM_A_DQ<51>	MEM_A_DQ<51> - @m42a_lib.M42A	15B7 28A4
MEM_A_DQ<52>	MEM_A_DQ<52> - @m42a_lib.M42A	15B7 28A6
MEM_A_DQ<53>	MEM_A_DQ<53> - @m42a_lib.M42A	15B7 28A4
MEM_A_DQ<54>	MEM_A_DQ<54> - @m42a_lib.M42A	15B7 28A4
MEM_A_DQ<55>	MEM_A_DQ<55> - @m42a_lib.M42A	15B7 28A6
MEM_A_DQ<56>	MEM_A_DQ<56> - @m42a_lib.M42A	15B7 28A6
MEM_A_DQ<57>	MEM_A_DQ<57> - @m42a_lib.M42A	15B7 28A6
MEM_A_DQ<58>	MEM_A_DQ<58> - @m42a_lib.M42A	15B7 28A6
MEM_A_DQ<59>	MEM_A_DQ<59> - @m42a_lib.M42A	15B7 28A4
MEM_A_DQ<60>	MEM_A_DQ<60> - @m42a_lib.M42A	15A7 28A4
MEM_A_DQ<61>	MEM_A_DQ<61> - @m42a_lib.M42A	15A7 28A4
MEM_A_DQ<62>	MEM_A_DQ<62> - @m42a_lib.M42A	15A7 28A4
MEM_A_DQ<63>	MEM_A_DQ<63> - @m42a_lib.M42A	15A7 28A6
MEM_A_DQS_N<0>	MEM_A_DQS_N<0> - @m42a_lib.M42A	15C5 28D6
MEM_A_DQS_N<1>	MEM_A_DQS_N<1> - @m42a_lib.M42A	15C5 28D6
MEM_A_DQS_N<2>	MEM_A_DQS_N<2> - @m42a_lib.M42A	15C5 28C4
MEM_A_DQS_N<3>	MEM_A_DQS_N<3> - @m42a_lib.M42A	15C5 28C6
MEM_A_DQS_N<4>	MEM_A_DQS_N<4> - @m42a_lib.M42A	15C5 28B6
MEM_A_DQS_N<5>	MEM_A_DQS_N<5> - @m42a_lib.M42A	15C5 28B4
MEM_A_DQS_N<6>	MEM_A_DQS_N<6> - @m42a_lib.M42A	15C5 28A4
MEM_A_DQS_N<7>	MEM_A_DQS_N<7> - @m42a_lib.M42A	15C5 28A6
MEM_A_DQS_P<0>	MEM_A_DQS_P<0> - @m42a_lib.M42A	15C5 28D6
MEM_A_DQS_P<1>	MEM_A_DQS_P<1> - @m42a_lib.M42A	15C5 28D6
MEM_A_DQS_P<2>	MEM_A_DQS_P<2> - @m42a_lib.M42A	15C5 28C4
MEM_A_DQS_P<3>	MEM_A_DQS_P<3> - @m42a_lib.M42A	15C5 28C6
MEM_A_DQS_P<4>	MEM_A_DQS_P<4> - @m42a_lib.M42A	15C5 28B6
MEM_A_DQS_P<5>	MEM_A_DQS_P<5> - @m42a_lib.M42A	15C5 28B4
MEM_A_DQS_P<6>	MEM_A_DQS_P<6> - @m42a_lib.M42A	15C5 28A4
MEM_A_DQS_P<7>	MEM_A_DQS_P<7> - @m42a_lib.M42A	15C5 28A6
MEM_A_RAS_L	MEM_A_RAS_L - @m42a_lib.M42A	15B5 28B4 30B6
MEM_A_WE_L	MEM_A_WE_L - @m42a_lib.M42A	15B5 28B6 30B6
MEM_B_A<0>	MEM_B_A<0> - @m42a_lib.M42A	15C2 29B4 30B5
MEM_B_A<1>	MEM_B_A<1> - @m42a_lib.M42A	15C2 29B6 30B5
MEM_B_A<2>	MEM_B_A<2> - @m42a_lib.M42A	15C2 29B4 30B5
MEM_B_A<3>	MEM_B_A<3> - @m42a_lib.M42A	15B2 29B6 30B5
MEM_B_A<4>	MEM_B_A<4> - @m42a_lib.M42A	15B2 29B4 30B5
MEM_B_A<5>	MEM_B_A<5> - @m42a_lib.M42A	15B2 29B6 30B5
MEM_B_A<6>	MEM_B_A<6> - @m42a_lib.M42A	15B2 29C4 30B5
MEM_B_A<7>	MEM_B_A<7> - @m42a_lib.M42A	15B2 29C4 30B5
MEM_B_A<8>	MEM_B_A<8> - @m42a_lib.M42A	15B2 29C6 30B5
MEM_B_A<9>	MEM_B_A<9> - @m42a_lib.M42A	15B2 29C6 30B5
MEM_B_A<10>	MEM_B_A<10> - @m42a_lib.M42A	15B2 29B6 30B5
MEM_B_A<11>	MEM_B_A<11> - @m42a_lib.M42A	15B2 29C4 30A5
MEM_B_A<12>	MEM_B_A<12> - @m42a_lib.M42A	15B2 29C6 30A5
MEM_B_A<13>	MEM_B_A<13> - @m42a_lib.M42A	15B2 29B4 30A5
MEM_B_A<14>	MEM_B_A<14> - @m42a_lib.M42A	6A4 29C4
	MEM_B_A14_SPN - @m42a_lib.M42A	6A3
MEM_B_A<15>	MEM_B_A<15> - @m42a_lib.M42A	6A4 29C4
	MEM_B_A15_SPN - @m42a_lib.M42A	6A3
MEM_B_BS<0>	MEM_B_BS<0> - @m42a_lib.M42A	15D2 29B6
MEM_B_BS<2..0>	MEM_B_BS<2..0> - @m42a_lib.M42A	30A6
MEM_B_BS<1>	MEM_B_BS<1> - @m42a_lib.M42A	15D2 29B4
MEM_B_BS<2>	MEM_B_BS<2> - @m42a_lib.M42A	15D2 29C6
MEM_B_CAS_L	MEM_B_CAS_L - @m42a_lib.M42A	15D2 29B6 30A6
MEM_B_DM<0>	MEM_B_DM<0> - @m42a_lib.M42A	15D2 29D4
MEM_B_DM<1>	MEM_B_DM<1> - @m42a_lib.M42A	15D2 29D4
MEM_B_DM<2>	MEM_B_DM<2> - @m42a_lib.M42A	15D2 29C4
MEM_B_DM<3>	MEM_B_DM<3> - @m42a_lib.M42A	15C2 29C6
MEM_B_DM<4>	MEM_B_DM<4> - @m42a_lib.M42A	15C2 29A4
MEM_B_DM<5>	MEM_B_DM<5> - @m42a_lib.M42A	15C2 29A6
MEM_B_DM<6>	MEM_B_DM<6> - @m42a_lib.M42A	15C2 29A6
MEM_B_DM<7>	MEM_B_DM<7> - @m42a_lib.M42A	15C2 29B4
MEM_B_DQ<0>	MEM_B_DQ<0> - @m42a_lib.M42A	15D4 29D4
MEM_B_DQ<1>	MEM_B_DQ<1> - @m42a_lib.M42A	15D4 29D6
MEM_B_DQ<2>	MEM_B_DQ<2> - @m42a_lib.M42A	15D4 29D6
MEM_B_DQ<3>	MEM_B_DQ<3> - @m42a_lib.M42A	15D4 29D6
MEM_B_DQ<4>	MEM_B_DQ<4> - @m42a_lib.M42A	15D4 29D4
MEM_B_DQ<5>	MEM_B_DQ<5> - @m42a_lib.M42A	15D4 29D6
MEM_B_DQ<6>	MEM_B_DQ<6> - @m42a_lib.M42A	15D4 29D4
MEM_B_DQ<7>	MEM_B_DQ<7> - @m42a_lib.M42A	15D4 29D4
MEM_B_DQ<8>	MEM_B_DQ<8> - @m42a_lib.M42A	15C4 29D6
MEM_B_DQ<9>	MEM_B_DQ<9> - @m42a_lib.M42A	15C4 29D4
MEM_B_DQ<10>	MEM_B_DQ<10> - @m42a_lib.M42A	15C4 29D6
MEM_B_DQ<11>	MEM_B_DQ<11> - @m42a_lib.M42A	15C4 29D4
MEM_B_DQ<12>	MEM_B_DQ<12> - @m42a_lib.M42A	15C4 29D6
MEM_B_DQ<13>	MEM_B_DQ<13> - @m42a_lib.M42A	15C4 29D6
MEM_B_DQ<14>	MEM_B_DQ<14> - @m42a_lib.M42A	15C4 29D4
MEM_B_DQ<15>	MEM_B_DQ<15> - @m42a_lib.M42A	15C4 29D4
MEM_B_DQ<16>	MEM_B_DQ<16> - @m42a_lib.M42A	15C4 29C4

MEM_B_DQ<17>	MEM_B_DQ<17> - @m42a_lib.M42A	15C4 29C6
MEM_B_DQ<18>	MEM_B_DQ<18> - @m42a_lib.M42A	15C4 29C6
MEM_B_DQ<19>	MEM_B_DQ<19> - @m42a_lib.M42A	15C4 29C4
MEM_B_DQ<20>	MEM_B_DQ<20> - @m42a_lib.M42A	15C4 29C6
MEM_B_DQ<21>	MEM_B_DQ<21> - @m42a_lib.M42A	15C4 29C4
MEM_B_DQ<22>	MEM_B_DQ<22> - @m42a_lib.M42A	15C4 29C6
MEM_B_DQ<23>	MEM_B_DQ<23> - @m42a_lib.M42A	15C4 29C4
MEM_B_DQ<24>	MEM_B_DQ<24> - @m42a_lib.M42A	15C4 29C4
MEM_B_DQ<25>	MEM_B_DQ<25> - @m42a_lib.M42A	15C4 29C4
MEM_B_DQ<26>	MEM_B_DQ<26> - @m42a_lib.M42A	15C4 29C4
MEM_B_DQ<27>	MEM_B_DQ<27> - @m42a_lib.M42A	15C4 29C6
MEM_B_DQ<28>	MEM_B_DQ<28> - @m42a_lib.M42A	15C4 29C4
MEM_B_DQ<29>	MEM_B_DQ<29> - @m42a_lib.M42A	15C4 29C6
MEM_B_DQ<30>	MEM_B_DQ<30> - @m42a_lib.M42A	15C4 29C6
MEM_B_DQ<31>	MEM_B_DQ<31> - @m42a_lib.M42A	15C4 29C6
MEM_B_DQ<32>	MEM_B_DQ<32> - @m42a_lib.M42A	15C4 29A6
MEM_B_DQ<33>	MEM_B_DQ<33> - @m42a_lib.M42A	15C4 29A4
MEM_B_DQ<34>	MEM_B_DQ<34> - @m42a_lib.M42A	15B4 29A6
MEM_B_DQ<35>	MEM_B_DQ<35> - @m42a_lib.M42A	15B4 29A4
MEM_B_DQ<36>	MEM_B_DQ<36> - @m42a_lib.M42A	15B4 29A4
MEM_B_DQ<37>	MEM_B_DQ<37> - @m42a_lib.M42A	15B4 29A6
MEM_B_DQ<38>	MEM_B_DQ<38> - @m42a_lib.M42A	15B4 29A6
MEM_B_DQ<39>	MEM_B_DQ<39> - @m42a_lib.M42A	15B4 29A4
MEM_B_DQ<40>	MEM_B_DQ<40> - @m42a_lib.M42A	15B4 29A4
MEM_B_DQ<41>	MEM_B_DQ<41> - @m42a_lib.M42A	15B4 29A6
MEM_B_DQ<42>	MEM_B_DQ<42> - @m42a_lib.M42A	15B4 29A4
MEM_B_DQ<43>	MEM_B_DQ<43> - @m42a_lib.M42A	15B4 29A6
MEM_B_DQ<44>	MEM_B_DQ<44> - @m42a_lib.M42A	15B4 29A6
MEM_B_DQ<45>	MEM_B_DQ<45> - @m42a_lib.M42A	15B4 29A6
MEM_B_DQ<46>	MEM_B_DQ<46> - @m42a_lib.M42A	15B4 29A4
MEM_B_DQ<47>	MEM_B_DQ<47> - @m42a_lib.M42A	15B4 29A4
MEM_B_DQ<48>	MEM_B_DQ<48> - @m42a_lib.M42A	15B4 29B4
MEM_B_DQ<49>	MEM_B_DQ<49> - @m42a_lib.M42A	15B4 29A6
MEM_B_DQ<50>	MEM_B_DQ<50> - @m42a_lib.M42A	15B4 29B6
MEM_B_DQ<51>	MEM_B_DQ<51> - @m42a_lib.M42A	15B4 29A4
MEM_B_DQ<52>	MEM_B_DQ<52> - @m42a_lib.M42A	15B4 29A6
MEM_B_DQ<53>	MEM_B_DQ<53> - @m42a_lib.M42A	15B4 29B4
MEM_B_DQ<54>	MEM_B_DQ<54> - @m42a_lib.M42A	15B4 29A4
MEM_B_DQ<55>	MEM_B_DQ<55> - @m42a_lib.M42A	15B4 29B6
MEM_B_DQ<56>	MEM_B_DQ<56> - @m42a_lib.M42A	15B4 29B4
MEM_B_DQ<57>	MEM_B_DQ<57> - @m42a_lib.M42A	15B4 29B6
MEM_B_DQ<58>	MEM_B_DQ<58> - @m42a_lib.M42A	15B4 29B6
MEM_B_DQ<59>	MEM_B_DQ<59> - @m42a_lib.M42A	15B4 29B4
MEM_B_DQ<60>	MEM_B_DQ<60> - @m42a_lib.M42A	15A4 29B6
MEM_B_DQ<61>	MEM_B_DQ<61> - @m42a_lib.M42A	15A4 29B4
MEM_B_DQ<62>	MEM_B_DQ<62> - @m42a_lib.M42A	15A4 29B6
MEM_B_DQ<63>	MEM_B_DQ<63> - @m42a_lib.M42A	15A4 29B4
MEM_B_DQS_N<0>	MEM_B_DQS_N<0> - @m42a_lib.M42A	15C2 29D6
MEM_B_DQS_N<1>	MEM_B_DQS_N<1> - @m42a_lib.M42A	15C2 29D6
MEM_B_DQS_N<2>	MEM_B_DQS_N<2> - @m42a_lib.M42A	15C2 29C6
MEM_B_DQS_N<3>	MEM_B_DQS_N<3> - @m42a_lib.M42A	15C2 29C4
MEM_B_DQS_N<4>	MEM_B_DQS_N<4> - @m42a_lib.M42A	15C2 29A6
MEM_B_DQS_N<5>	MEM_B_DQS_N<5> - @m42a_lib.M42A	15C2 29A4
MEM_B_DQS_N<6>	MEM_B_DQS_N<6> - @m42a_lib.M42A	15C2 29B4
MEM_B_DQS_N<7>	MEM_B_DQS_N<7> - @m42a_lib.M42A	15C2 29B6
MEM_B_DQS_P<0>	MEM_B_DQS_P<0> - @m42a_lib.M42A	15C2 29D6
MEM_B_DQS_P<1>	MEM_B_DQS_P<1> - @m42a_lib.M42A	15C2 29D6
MEM_B_DQS_P<2>	MEM_B_DQS_P<2> - @m42a_lib.M42A	15C2 29C6
MEM_B_DQS_P<3>	MEM_B_DQS_P<3> - @m42a_lib.M42A	15C2 29C4
MEM_B_DQS_P<4>	MEM_B_DQS_P<4> - @m42a_lib.M42A	15C2 29A6
MEM_B_DQS_P<5>	MEM_B_DQS_P<5> - @m42a_lib.M42A	15C2 29A4
MEM_B_DQS_P<6>	MEM_B_DQS_P<6> - @m42a_lib.M42A	15C2 29A4
MEM_B_DQS_P<7>	MEM_B_DQS_P<7> - @m42a_lib.M42A	15C2 29B6
MEM_B_RAS_L	MEM_B_RAS_L - @m42a_lib.M42A	15B2 29B4 30A6
MEM_B_WE_L	MEM_B_WE_L - @m42a_lib.M42A	15B2 29B6 30A6
MEM_CKE<0>	MEM_CKE<0> - @m42a_lib.M42A	14C4 28C6
MEM_CKE<3..0>	MEM_CKE<3..0> - @m42a_lib.M42A	30D6
MEM_CKE<1>	MEM_CKE<1> - @m42a_lib.M42A	14C4 28C4
MEM_CKE<2>	MEM_CKE<2> - @m42a_lib.M42A	14C4 29C6
MEM_CKE<3>	MEM_CKE<3> - @m42a_lib.M42A	14C4 29C4
MEM_CLK_N<0>	MEM_CLK_N<0> - @m42a_lib.M42A	14D4 28D4
MEM_CLK_N<1>	MEM_CLK_N<1> - @m42a_lib.M42A	14D4 28A4
MEM_CLK_N<2>	MEM_CLK_N<2> - @m42a_lib.M42A	14D4 29A4
MEM_CLK_N<3>	MEM_CLK_N<3> - @m42a_lib.M42A	14D4 29D4
MEM_CLK_P<0>	MEM_CLK_P<0> - @m42a_lib.M42A	14D4 28D4
MEM_CLK_P<1>	MEM_CLK_P<1> - @m42a_lib.M42A	14D4 28A4
MEM_CLK_P<2>	MEM_CLK_P<2> - @m42a_lib.M42A	14D4 29A4
MEM_CLK_P<3>	MEM_CLK_P<3> - @m42a_lib.M42A	14D4 29D4
MEM_CS_L<0>	MEM_CS_L<0> - @m42a_lib.M42A	14C4 28B4
MEM_CS_L<3..0>	MEM_CS_L<3..0> - @m42a_lib.M42A	30D6
MEM_CS_L<1>	MEM_CS_L<1> - @m42a_lib.M42A	14C4 28B6
MEM_CS_L<2>	MEM_CS_L<2> - @m42a_lib.M42A	14C4 29B4
MEM_CS_L<3>	MEM_CS_L<3> - @m42a_lib.M42A	14C4 29B6
MEM_ISENSE	MEM_ISENSE - @m42a_lib.M42A	61C2
MEM_ISENSE_R1_N	MEM_ISENSE_R1_N - @m42a_lib.M42A	61C3
MEM_ISENSE_R1_P	MEM_ISENSE_R1_P - @m42a_lib.M42A	61C3
MEM_ISENSE_R2	MEM_ISENSE_R2 - @m42a_lib.M42A	61C2
MEM_ISENSE_VCC	MEM_ISENSE_VCC - @m42a_lib.M42A	61C2
MEM_ODT<0>	MEM_ODT<0> - @m42a_lib.M42A	14C4 28B4
MEM_ODT<3..0>	MEM_ODT<3..0> - @m42a_lib.M42A	30D6
MEM_ODT<1>	MEM_ODT<1> - @m42a_lib.M42A	14C4 28B6
MEM_ODT<2>	MEM_ODT<2> - @m42a_lib.M42A	14C4 29B4
MEM_ODT<3>	MEM_ODT<3> - @m42a_lib.M42A	14C4 29B6
MEM_RCOMP	MEM_RCOMP - @m42a_lib.M42A	14C4
MEM_RCOMP_L	MEM_RCOMP_L - @m42a_lib.M42A	14C4
MEM_VREF_A	MEM_VREF_A - @m42a_lib.M42A	28D1 28D7
MEM_VREF_B	MEM_VREF_B - @m42a_lib.M42A	29D1 29D7
MEM_VREF_NB_0	MEM_VREF_NB_0 - @m42a_lib.M42A	14C2 19C7
MEM_VREF_NB_1	MEM_VREF_NB_1 - @m42a_lib.M42A	14C2 19C6
MIC_HI	MIC_HI - @m42a_lib.M42A	56B3 57A8
MIC_HI_CONN	MIC_HI_CONN - @m42a_lib.M42A	56B1 56D3
MIC_HI_F	MIC_HI_F - @m42a_lib.M42A	56B2
MIC_IN	MIC_IN - @m42a_lib.M42A	57A7
MIC_LO	MIC_LO - @m42a_lib.M42A	56B3 57A8
MIC_LO_CONN	MIC_LO_CONN - @m42a_lib.M42A	56B1 56D3
MIC_LO_F	MIC_LO_F - @m42a_lib.M42A	56B2
MIC_SHIELD	MIC_SHIELD - @m42a_lib.M42A	56B3 57A8
MIC_SHIELD_F	MIC_SHIELD_F - @m42a_lib.M42A	56B2
MIC_SHLD_CONN	MIC_SHLD_CONN - @m42a_lib.M42A	56B1 56D3
MM1573DN_NR	MM1573DN_NR - @m42a_lib.M42A	19C3
NB_BSEL<0>	NB_BSEL<0> - @m42a_lib.M42A	14C6 33C7
NB_BSEL<1>	NB_BSEL<1> - @m42a_lib.M42A	14C6 33B7
NB_BSEL<2>	NB_BSEL<2> - @m42a_lib.M42A	14C6 33B7
NB_CFG<3>	NB_CFG<3> - @m42a_lib.M42A	6D4 14C6
	TP_NB_CFG3 - @m42a_lib.M42A	6D3
NB_CFG<4>	NB_CFG<4> - @m42a_lib.M42A	6D4 14C6
	TP_NB_CFG4 - @m42a_lib.M42A	6D3
NB_CFG<5>	NB_CFG<5> - @m42a_lib.M42A	14C6 20C7
NB_CFG<6>	NB_CFG<6> - @m42a_lib.M42A	6D4 14C6
	TP_NB_CFG6 - @m42a_lib.M42A	6D3
NB_CFG<7>	NB_CFG<7> - @m42a_lib.M42A	14C6 20C7
NB_CFG<8>	NB_CFG<8> - @m42a_lib.M42A	6D4 14C6
	TP_NB_CFG8 - @m42a_lib.M42A	6D3
NB_CFG<9>	NB_CFG<9> - @m42a_lib.M42A	14C6 20B7

www.laptopblue.vn

NB_CFG<10>	NB_CFG<10> - @m42a_lib.M42A	6D4 14C6
	TP_NB_CFG10 - @m42a_lib.M42A	6D3
NB_CFG<11>	NB_CFG<11> - @m42a_lib.M42A	6D4 14C6
	TP_NB_CFG11 - @m42a_lib.M42A	6D3
NB_CFG<12>	NB_CFG<12> - @m42a_lib.M42A	6D4 14C6
	TP_NB_CFG12 - @m42a_lib.M42A	6D3
NB_CFG<13>	NB_CFG<13> - @m42a_lib.M42A	6D4 14C6
	TP_NB_CFG13 - @m42a_lib.M42A	6D3
NB_CFG<14>	NB_CFG<14> - @m42a_lib.M42A	6D4 14C6
	TP_NB_CFG14 - @m42a_lib.M42A	6D3
NB_CFG<15>	NB_CFG<15> - @m42a_lib.M42A	6D4 14C6
	TP_NB_CFG15 - @m42a_lib.M42A	6D3
NB_CFG<16>	NB_CFG<16> - @m42a_lib.M42A	14C6 20C5
NB_CFG<17>	NB_CFG<17> - @m42a_lib.M42A	6D4 14C6
	TP_NB_CFG17 - @m42a_lib.M42A	6D3
NB_CFG<18>	NB_CFG<18> - @m42a_lib.M42A	14C6 20B5
NB_CFG<19>	NB_CFG<19> - @m42a_lib.M42A	14C6 20B5
NB_CFG<20>	NB_CFG<20> - @m42a_lib.M42A	14B6 20A5
NB_CLK100M_GCLKIN_N	NB_CLK100M_GCLKIN_N - @m42a_lib.M42A	14C4 33B2 33C4
NB_CLK100M_GCLKIN_P	NB_CLK100M_GCLKIN_P - @m42a_lib.M42A	14C4 33C2 33C4
NB_CLK_DREFCLKIN_N	NB_CLK_DREFCLKIN_N - @m42a_lib.M42A	14C4 33B3 33C2
NB_CLK_DREFCLKIN_P	NB_CLK_DREFCLKIN_P - @m42a_lib.M42A	14C4 33B3 33C2
NB_CLK_DREFSSCLKIN_N	NB_CLK_DREFSSCLKIN_N - @m42a_lib.M42A	14C4 33A4 33C2
NB_CLK_DREFSSCLKIN_P	NB_CLK_DREFSSCLKIN_P - @m42a_lib.M42A	14B4 33A3 33C2
NB_FSB_VREF	NB_FSB_VREF - @m42a_lib.M42A	12C4
NB_FSB_XRCOMP	NB_FSB_XRCOMP - @m42a_lib.M42A	12A6
NB_FSB_XSCOMP	NB_FSB_XSCOMP - @m42a_lib.M42A	12A6
NB_FSB_XSWING	NB_FSB_XSWING - @m42a_lib.M42A	12A6
NB_FSB_YRCOMP	NB_FSB_YRCOMP - @m42a_lib.M42A	12A6
NB_FSB_YSCOMP	NB_FSB_YSCOMP - @m42a_lib.M42A	12A6
NB_FSB_YSWING	NB_FSB_YSWING - @m42a_lib.M42A	12A6
NB_ISENSE	NB_ISENSE - @m42a_lib.M42A	62A6
NB_ISENSE_R1_N	NB_ISENSE_R1_N - @m42a_lib.M42A	62A7
NB_ISENSE_R1_P	NB_ISENSE_R1_P - @m42a_lib.M42A	62A7
NB_ISENSE_R2	NB_ISENSE_R2 - @m42a_lib.M42A	62A6
NB_ISENSE_VCC	NB_ISENSE_VCC - @m42a_lib.M42A	62A6
NB_RIGHT_DOWN_SCREW	NB_RIGHT_DOWN_SCREW - @m42a_lib.M42A	6A8
NB_RST_IN_L_R	NB_RST_IN_L_R - @m42a_lib.M42A	14B6
NB_SB_SYNC_L	NB_SB_SYNC_L - @m42a_lib.M42A	14B6 22A6
NB_TV_DCONSEL0	NB_TV_DCONSEL0 - @m42a_lib.M42A	14D6
NB_TV_DCONSEL1	NB_TV_DCONSEL1 - @m42a_lib.M42A	14C6
NB_VCCSM_LF1	NB_VCCSM_LF1 - @m42a_lib.M42A	16B4
NB_VCCSM_LF2	NB_VCCSM_LF2 - @m42a_lib.M42A	16B4
NB_VCCSM_LF4	NB_VCCSM_LF4 - @m42a_lib.M42A	16B8
NB_VCCSM_LF5	NB_VCCSM_LF5 - @m42a_lib.M42A	16B8
NB_VTTLF_CAP1	NB_VTTLF_CAP1 - @m42a_lib.M42A	17A4
NB_VTTLF_CAP2	NB_VTTLF_CAP2 - @m42a_lib.M42A	17A4
NB_VTTLF_CAP3	NB_VTTLF_CAP3 - @m42a_lib.M42A	17B4
ODD_PWR_EN_SLOW_START	ODD_PWR_EN_SLOW_START - @m42a_lib.M42A	34C7
ODD_PWR_EN_SLOW_START_L	ODD_PWR_EN_SLOW_START_L - @m42a_lib.M42A	34C6
ODD_PWR_EN_SLOW_START_L_R	ODD_PWR_EN_SLOW_START_L_R - @m42a_lib.M42A	34C5
ONEWIRE_DCIN_DIV	ONEWIRE_DCIN_DIV - @m42a_lib.M42A	65C5
ONEWIRE_EN	ONEWIRE_EN - @m42a_lib.M42A	65C7
ONEWIRE_ESD	ONEWIRE_ESD - @m42a_lib.M42A	65C5
ONEWIRE_OV	ONEWIRE_OV - @m42a_lib.M42A	65C6
ONEWIRE_PU_EN	ONEWIRE_PU_EN - @m42a_lib.M42A	65B7
ONEWIRE_PU_EN_L	ONEWIRE_PU_EN_L - @m42a_lib.M42A	65C8
ONEWIRE_PWR_EN_L	ONEWIRE_PWR_EN_L - @m42a_lib.M42A	65C7
ONEWIRE_PWR_EN_L_DIV	ONEWIRE_PWR_EN_L_DIV - @m42a_lib.M42A	65C6
P0V52_SMC_LSREF	P0V52_SMC_LSREF - @m42a_lib.M42A	46D3
P1V8S0_EN_L_RC	P1V8S0_EN_L_RC - @m42a_lib.M42A	63A5
P3V3S0_EN_RC	P3V3S0_EN_RC - @m42a_lib.M42A	63B5
P3V3S3_EN_L_RC	P3V3S3_EN_L_RC - @m42a_lib.M42A	63C5
P3V42G3H5_BOOST	P3V42G3H5_BOOST - @m42a_lib.M42A	63D2
P3V42G3H_FB	P3V42G3H_FB - @m42a_lib.M42A	5D7 63D2
P5VS0_EN_RC	P5VS0_EN_RC - @m42a_lib.M42A	63C5
P5VS3_EN_L_RC	P5VS3_EN_L_RC - @m42a_lib.M42A	63D5
PATA_PWR_EN_L	PATA_PWR_EN_L - @m42a_lib.M42A	23B3 23C3
PBUS_S0_SMC_VSENSE	PBUS_S0_SMC_VSENSE - @m42a_lib.M42A	48C6
PBUS_SMC_VSENSE_EN	PBUS_SMC_VSENSE_EN - @m42a_lib.M42A	48C8
PBUS_SMC_VSENSE_EN_L	PBUS_SMC_VSENSE_EN_L - @m42a_lib.M42A	48C7
PCIE_A_D2R_C_N	PCIE_A_D2R_C_N - @m42a_lib.M42A	36D6
PCIE_A_D2R_C_P	PCIE_A_D2R_C_P - @m42a_lib.M42A	36D6
PCIE_A_D2R_N	PCIE_A_D2R_N - @m42a_lib.M42A	22D4 36D5
PCIE_A_D2R_P	PCIE_A_D2R_P - @m42a_lib.M42A	22D4 36D5
PCIE_A_R2D_C_N	PCIE_A_R2D_C_N - @m42a_lib.M42A	22D4 36C5
PCIE_A_R2D_C_P	PCIE_A_R2D_C_P - @m42a_lib.M42A	22D4 36C5
PCIE_A_R2D_N	PCIE_A_R2D_N - @m42a_lib.M42A	36C6
PCIE_A_R2D_P	PCIE_A_R2D_P - @m42a_lib.M42A	36C6
PCIE_B_D2R_N	PCIE_B_D2R_N - @m42a_lib.M42A	22D4 43C7
PCIE_B_D2R_P	PCIE_B_D2R_P - @m42a_lib.M42A	22D4 43C7
PCIE_B_R2D_C_N	PCIE_B_R2D_C_N - @m42a_lib.M42A	22D4 43B7
PCIE_B_R2D_C_P	PCIE_B_R2D_C_P - @m42a_lib.M42A	22D4 43B7
PCIE_B_R2D_N	PCIE_B_R2D_N - @m42a_lib.M42A	43B6
PCIE_B_R2D_P	PCIE_B_R2D_P - @m42a_lib.M42A	43B6
PCIE_C_D2R_N	PCIE_C_D2R_N - @m42a_lib.M42A	6C4 22D4
	PCIE_C_D2R_N_SPN - @m42a_lib.M42A	6C3
PCIE_C_D2R_P	PCIE_C_D2R_P - @m42a_lib.M42A	6C4 22D4
	PCIE_C_D2R_P_SPN - @m42a_lib.M42A	6C3
PCIE_C_R2D_C_N	PCIE_C_R2D_C_N - @m42a_lib.M42A	6C4 22D4
	PCIE_C_R2D_C_N_SPN - @m42a_lib.M42A	6C3
PCIE_C_R2D_C_P	PCIE_C_R2D_C_P - @m42a_lib.M42A	6C4 22D4
	PCIE_C_R2D_C_P_SPN - @m42a_lib.M42A	6C3
PCIE_D_D2R_N	PCIE_D_D2R_N - @m42a_lib.M42A	6C4 22D4
	PCIE_D_D2R_N_SPN - @m42a_lib.M42A	6C3
PCIE_D_D2R_P	PCIE_D_D2R_P - @m42a_lib.M42A	6C4 22D4
	PCIE_D_D2R_P_SPN - @m42a_lib.M42A	6C3
PCIE_D_R2D_C_N	PCIE_D_R2D_C_N - @m42a_lib.M42A	6C4 22D4
	PCIE_D_R2D_C_N_SPN - @m42a_lib.M42A	6C3
PCIE_D_R2D_C_P	PCIE_D_R2D_C_P - @m42a_lib.M42A	6C4 22D4
	PCIE_D_R2D_C_P_SPN - @m42a_lib.M42A	6C3
PCIE_E_D2R_N	PCIE_E_D2R_N - @m42a_lib.M42A	6C4 22C4
	PCIE_E_D2R_N_SPN - @m42a_lib.M42A	6C3
PCIE_E_D2R_P	PCIE_E_D2R_P - @m42a_lib.M42A	6C4 22C4
	PCIE_E_D2R_P_SPN - @m42a_lib.M42A	6C3
PCIE_E_R2D_C_N	PCIE_E_R2D_C_N - @m42a_lib.M42A	6C4 22C4
	PCIE_E_R2D_C_N_SPN - @m42a_lib.M42A	6C3
PCIE_E_R2D_C_P	PCIE_E_R2D_C_P - @m42a_lib.M42A	6C4 22C4
	PCIE_E_R2D_C_P_SPN - @m42a_lib.M42A	6C3
PCIE_F_D2R_N	PCIE_F_D2R_N - @m42a_lib.M42A	6C4 22C4
	PCIE_F_D2R_N_SPN - @m42a_lib.M42A	6C3
PCIE_F_D2R_P	PCIE_F_D2R_P - @m42a_lib.M42A	6C4 22C4
	PCIE_F_D2R_P_SPN - @m42a_lib.M42A	6C3
PCIE_F_R2D_C_N	PCIE_F_R2D_C_N - @m42a_lib.M42A	6C4 22C4

	PCIE_F_R2D_C_N_SPN - @m42a_lib.M42A	6C3
PCIE_F_R2D_C_P	PCIE_F_R2D_C_P - @m42a_lib.M42A	6B4 22C4
	PCIE_F_R2D_C_P_SPN - @m42a_lib.M42A	6B3
PCIE_WAKE_L	PCIE_WAKE_L - @m42a_lib.M42A	23C8 36C6 43C6
PCI_AD<0>	PCI_AD<0> - @m42a_lib.M42A	22B7 38C5
PCI_AD<1>	PCI_AD<1> - @m42a_lib.M42A	22B7 38C5
PCI_AD<2>	PCI_AD<2> - @m42a_lib.M42A	22B7 38C5
PCI_AD<3>	PCI_AD<3> - @m42a_lib.M42A	22B7 38C5
PCI_AD<4>	PCI_AD<4> - @m42a_lib.M42A	22B7 38C5
PCI_AD<5>	PCI_AD<5> - @m42a_lib.M42A	22B7 38C5
PCI_AD<6>	PCI_AD<6> - @m42a_lib.M42A	22B7 38C5
PCI_AD<7>	PCI_AD<7> - @m42a_lib.M42A	22B7 38C5
PCI_AD<8>	PCI_AD<8> - @m42a_lib.M42A	22B7 38C5
PCI_AD<9>	PCI_AD<9> - @m42a_lib.M42A	22B7 38C5
PCI_AD<10>	PCI_AD<10> - @m42a_lib.M42A	22B7 38C5
PCI_AD<11>	PCI_AD<11> - @m42a_lib.M42A	22B7 38C5
PCI_AD<12>	PCI_AD<12> - @m42a_lib.M42A	22B7 38B5
PCI_AD<13>	PCI_AD<13> - @m42a_lib.M42A	22B7 38B5
PCI_AD<14>	PCI_AD<14> - @m42a_lib.M42A	22B7 38B5
PCI_AD<15>	PCI_AD<15> - @m42a_lib.M42A	22B7 38B5
PCI_AD<16>	PCI_AD<16> - @m42a_lib.M42A	22B7 38B5
PCI_AD<17>	PCI_AD<17> - @m42a_lib.M42A	22B7 38B5
PCI_AD<18>	PCI_AD<18> - @m42a_lib.M42A	22B7 38B5
PCI_AD<19>	PCI_AD<19> - @m42a_lib.M42A	22A7 38B6
PCI_AD<20>	PCI_AD<20> - @m42a_lib.M42A	22A7 38B5
PCI_AD<21>	PCI_AD<21> - @m42a_lib.M42A	22A7 38B5
PCI_AD<22>	PCI_AD<22> - @m42a_lib.M42A	22A7 38B5
PCI_AD<23>	PCI_AD<23> - @m42a_lib.M42A	22A7 38B5
PCI_AD<24>	PCI_AD<24> - @m42a_lib.M42A	22A7 38B5
PCI_AD<25>	PCI_AD<25> - @m42a_lib.M42A	22A7 38B5
PCI_AD<26>	PCI_AD<26> - @m42a_lib.M42A	22A7 38B5
PCI_AD<27>	PCI_AD<27> - @m42a_lib.M42A	22A7 38B5
PCI_AD<28>	PCI_AD<28> - @m42a_lib.M42A	22A7 38B5
PCI_AD<29>	PCI_AD<29> - @m42a_lib.M42A	22A7 38B5
PCI_AD<30>	PCI_AD<30> - @m42a_lib.M42A	22A7 38B5
PCI_AD<31>	PCI_AD<31> - @m42a_lib.M42A	22A7 38B5
PCI_CLK_FW	PCI_CLK_FW - @m42a_lib.M42A	33D6 38A5
PCI_CLK_PORT80_LPC	PCI_CLK_PORT80_LPC - @m42a_lib.M42A	5C2 33D6 47C5
PCI_CLK_SB	PCI_CLK_SB - @m42a_lib.M42A	22A6 33D6
PCI_CLK_SMC	PCI_CLK_SMC - @m42a_lib.M42A	33D6 45C8
PCI_CLK_TPM	PCI_CLK_TPM - @m42a_lib.M42A	33D6 53C6
PCI_C_BE_L<0>	PCI_C_BE_L<0> - @m42a_lib.M42A	22B6 38B5
PCI_C_BE_L<1>	PCI_C_BE_L<1> - @m42a_lib.M42A	22B6 38B5
PCI_C_BE_L<2>	PCI_C_BE_L<2> - @m42a_lib.M42A	22B6 38B5
PCI_C_BE_L<3>	PCI_C_BE_L<3> - @m42a_lib.M42A	22B6 38B5
PCI_DEVSEL_L	PCI_DEVSEL_L - @m42a_lib.M42A	22A6 26D3 38A5
PCI_FRAME_L	PCI_FRAME_L - @m42a_lib.M42A	22A7 26D3 38A5
PCI_GNT3_L	PCI_GNT3_L - @m42a_lib.M42A	22B6 38A5
PCI_IRDY_L	PCI_IRDY_L - @m42a_lib.M42A	22A6 26D3 38A5
PCI_LOCK_L	PCI_LOCK_L - @m42a_lib.M42A	22A6 26D3
PCI_PAR	PCI_PAR - @m42a_lib.M42A	22A6 38B5
PCI_PERR_L	PCI_PERR_L - @m42a_lib.M42A	22A6 26D3 38A5
PCI_PME_FW_L	PCI_PME_FW_L - @m42a_lib.M42A	22B5 38A5
PCI_REQ0_L	PCI_REQ0_L - @m42a_lib.M42A	22B6 26C3
PCI_REQ1_L	PCI_REQ1_L - @m42a_lib.M42A	22B6 26C3
PCI_REQ2_L	PCI_REQ2_L - @m42a_lib.M42A	22B6 26C3
PCI_REQ3_L	PCI_REQ3_L - @m42a_lib.M42A	22B6 26C3 38A5
PCI_RST_L	PCI_RST_L - @m42a_lib.M42A	22A6 38A6
PCI_SERR_L	PCI_SERR_L - @m42a_lib.M42A	22A6 26D3 38A5
PCI_STOP_L	PCI_STOP_L - @m42a_lib.M42A	22A6 26D3 38A5
PCI_TRDY_L	PCI_TRDY_L - @m42a_lib.M42A	22A6 26D3 38A5
PEG_COMP	PEG_COMP - @m42a_lib.M42A	13D3
PEG_D2R_N<0>	PEG_D2R_N<0> - @m42a_lib.M42A	6D6 13D3
	PEG_D2R_N0_SPN - @m42a_lib.M42A	6D5
PEG_D2R_N<1>	PEG_D2R_N<1> - @m42a_lib.M42A	13D3 68B6
PEG_D2R_N<2>	PEG_D2R_N<2> - @m42a_lib.M42A	6D6 13D3
	PEG_D2R_N2_SPN - @m42a_lib.M42A	6D5
PEG_D2R_N<3>	PEG_D2R_N<3> - @m42a_lib.M42A	6C6 13D3
	PEG_D2R_N3_SPN - @m42a_lib.M42A	6C5
PEG_D2R_N<4>	PEG_D2R_N<4> - @m42a_lib.M42A	6C6 13D3
	PEG_D2R_N4_SPN - @m42a_lib.M42A	6C5
PEG_D2R_N<5>	PEG_D2R_N<5> - @m42a_lib.M42A	6C6 13D3
	PEG_D2R_N5_SPN - @m42a_lib.M42A	6C5
PEG_D2R_N<6>	PEG_D2R_N<6> - @m42a_lib.M42A	6C6 13D3
	PEG_D2R_N6_SPN - @m42a_lib.M42A	6C5
PEG_D2R_N<7>	PEG_D2R_N<7> - @m42a_lib.M42A	6C6 13D3
	PEG_D2R_N7_SPN - @m42a_lib.M42A	6C5
PEG_D2R_N<8>	PEG_D2R_N<8> - @m42a_lib.M42A	6C6 13D3
	PEG_D2R_N8_SPN - @m42a_lib.M42A	6C5
PEG_D2R_N<9>	PEG_D2R_N<9> - @m42a_lib.M42A	6C6 13D3
	PEG_D2R_N9_SPN - @m42a_lib.M42A	6C5
PEG_D2R_N<10>	PEG_D2R_N<10> - @m42a_lib.M42A	6C6 13C3
	PEG_D2R_N10_SPN - @m42a_lib.M42A	6C5
PEG_D2R_N<11>	PEG_D2R_N<11> - @m42a_lib.M42A	6C6 13C3
	PEG_D2R_N11_SPN - @m42a_lib.M42A	6C5
PEG_D2R_N<12>	PEG_D2R_N<12> - @m42a_lib.M42A	6C6 13C3
	PEG_D2R_N12_SPN - @m42a_lib.M42A	6C5
PEG_D2R_N<13>	PEG_D2R_N<13> - @m42a_lib.M42A	6C6 13C3
	PEG_D2R_N13_SPN - @m42a_lib.M42A	6C5
PEG_D2R_N<14>	PEG_D2R_N<14> - @m42a_lib.M42A	6C6 13C3
	PEG_D2R_N14_SPN - @m42a_lib.M42A	6C5
PEG_D2R_N<15>	PEG_D2R_N<15> - @m42a_lib.M42A	6C6 13C3
	PEG_D2R_N15_SPN - @m42a_lib.M42A	6C5
PEG_D2R_P<0>	PEG_D2R_P<0> - @m42a_lib.M42A	6C6 13C3
	PEG_D2R_P0_SPN - @m42a_lib.M42A	6C5
PEG_D2R_P<1>	PEG_D2R_P<1> - @m42a_lib.M42A	13C3 68B6
PEG_D2R_P<2>	PEG_D2R_P<2> - @m42a_lib.M42A	6C6 13C3
	PEG_D2R_P2_SPN - @m42a_lib.M42A	6C5
PEG_D2R_P<3>	PEG_D2R_P<3> - @m42a_lib.M42A	6C6 13C3
	PEG_D2R_P3_SPN - @m42a_lib.M42A	6C5
PEG_D2R_P<4>	PEG_D2R_P<4> - @m42a_lib.M42A	6C6 13C3
	PEG_D2R_P4_SPN - @m42a_lib.M42A	6C5
PEG_D2R_P<5>	PEG_D2R_P<5> - @m42a_lib.M42A	6C6 13C3
	PEG_D2R_P5_SPN - @m42a_lib.M42A	6C5
PEG_D2R_P<6>	PEG_D2R_P<6> - @m42a_lib.M42A	6C6 13C3
	PEG_D2R_P6_SPN - @m42a_lib.M42A	6C5
PEG_D2R_P<7>	PEG_D2R_P<7> - @m42a_lib.M42A	6C6 13C3
	PEG_D2R_P7_SPN - @m42a_lib.M42A	6C5
PEG_D2R_P<8>	PEG_D2R_P<8> - @m42a_lib.M42A	6C6 13C3
	PEG_D2R_P8_SPN - @m42a_lib.M42A	6C5
PEG_D2R_P<9>	PEG_D2R_P<9> - @m42a_lib.M42A	6C6 13C3
	PEG_D2R_P9_SPN - @m42a_lib.M42A	6C5
PEG_D2R_P<10>	PEG_D2R_P<10> - @m42a_lib.M42A	6C6 13C3
	PEG_D2R_P10_SPN - @m42a_lib.M42A	6C5
PEG_D2R_P<11>	PEG_D2R_P<11> - @m42a_lib.M42A	6C6 13C3
	PEG_D2R_P11_SPN - @m42a_lib.M42A	6C5
PEG_D2R_P<12>	PEG_D2R_P<12> - @m42a_lib.M42A	6C6 13C3
	PEG_D2R_P12_SPN - @m42a_lib.M42A	6C5
PEG_D2R_P<13>	PEG_D2R_P<13> - @m42a_lib.M42A	6C6 13C3
	PEG_D2R_P13_SPN - @m42a_lib.M42A	6C5
PEG_D2R_P<14>	PEG_D2R_P<14> - @m42a_lib.M42A	6B6 13C3
	PEG_D2R_P14_SPN - @m42a_lib.M42A	6B5
PEG_D2R_P<15>	PEG_D2R_P<15> - @m42a_lib.M42A	6B6 13C3
	PEG_D2R_P15_SPN - @m42a_lib.M42A	6B5

PEG_R2D_C_N<0>	PEG_R2D_C_N<0> - @m42a_lib.M42A	13C3 68C6
PEG_R2D_C_N<1>	PEG_R2D_C_N<1> - @m42a_lib.M42A	13C3 68C6
PEG_R2D_C_N<2>	PEG_R2D_C_N<2> - @m42a_lib.M42A	13C3 68B6
PEG_R2D_C_N<3>	PEG_R2D_C_N<3> - @m42a_lib.M42A	13B3 68B6
PEG_R2D_C_N<4>	PEG_R2D_C_N<4> - @m42a_lib.M42A	6B6 13B3
	PEG_R2D_C_N4_SPN - @m42a_lib.M42A	6B5
PEG_R2D_C_N<5>	PEG_R2D_C_N<5> - @m42a_lib.M42A	6B6 13B3
	PEG_R2D_C_N5_SPN - @m42a_lib.M42A	6B5
PEG_R2D_C_N<6>	PEG_R2D_C_N<6> - @m42a_lib.M42A	6B6 13B3
	PEG_R2D_C_N6_SPN - @m42a_lib.M42A	6B5
PEG_R2D_C_N<7>	PEG_R2D_C_N<7> - @m42a_lib.M42A	6B6 13B3
	PEG_R2D_C_N7_SPN - @m42a_lib.M42A	6B5
PEG_R2D_C_N<8>	PEG_R2D_C_N<8> - @m42a_lib.M42A	6B6 13B3
	PEG_R2D_C_N8_SPN - @m42a_lib.M42A	6B5
PEG_R2D_C_N<9>	PEG_R2D_C_N<9> - @m42a_lib.M42A	6B6 13B3
	PEG_R2D_C_N9_SPN - @m42a_lib.M42A	6B5
PEG_R2D_C_N<10>	PEG_R2D_C_N<10> - @m42a_lib.M42A	6B6 13B3
	PEG_R2D_C_N10_SPN - @m42a_lib.M42A	6B5
PEG_R2D_C_N<11>	PEG_R2D_C_N<11> - @m42a_lib.M42A	6B6 13B3
	PEG_R2D_C_N11_SPN - @m42a_lib.M42A	6B5
PEG_R2D_C_N<12>	PEG_R2D_C_N<12> - @m42a_lib.M42A	6B6 13B3
	PEG_R2D_C_N12_SPN - @m42a_lib.M42A	6B5
PEG_R2D_C_N<13>	PEG_R2D_C_N<13> - @m42a_lib.M42A	6B6 13B3
	PEG_R2D_C_N13_SPN - @m42a_lib.M42A	6B5
PEG_R2D_C_N<14>	PEG_R2D_C_N<14> - @m42a_lib.M42A	6B6 13B3
	PEG_R2D_C_N14_SPN - @m42a_lib.M42A	6B5
PEG_R2D_C_N<15>	PEG_R2D_C_N<15> - @m42a_lib.M42A	6B6 13B3
	PEG_R2D_C_N15_SPN - @m42a_lib.M42A	6B5
PEG_R2D_C_P<0>	PEG_R2D_C_P<0> - @m42a_lib.M42A	13B3 68C6
PEG_R2D_C_P<1>	PEG_R2D_C_P<1> - @m42a_lib.M42A	13B3 68C6
PEG_R2D_C_P<2>	PEG_R2D_C_P<2> - @m42a_lib.M42A	13B3 68B6
PEG_R2D_C_P<3>	PEG_R2D_C_P<3> - @m42a_lib.M42A	13B3 68B6
PEG_R2D_C_P<4>	PEG_R2D_C_P<4> - @m42a_lib.M42A	6B6 13B3
	PEG_R2D_C_P4_SPN - @m42a_lib.M42A	6B5
PEG_R2D_C_P<5>	PEG_R2D_C_P<5> - @m42a_lib.M42A	6B6 13B3
	PEG_R2D_C_P5_SPN - @m42a_lib.M42A	6B5
PEG_R2D_C_P<6>	PEG_R2D_C_P<6> - @m42a_lib.M42A	6B6 13B3
	PEG_R2D_C_P6_SPN - @m42a_lib.M42A	6B5
PEG_R2D_C_P<7>	PEG_R2D_C_P<7> - @m42a_lib.M42A	6B6 13B3
	PEG_R2D_C_P7_SPN - @m42a_lib.M42A	6B5
PEG_R2D_C_P<8>	PEG_R2D_C_P<8> - @m42a_lib.M42A	6B6 13B3
	PEG_R2D_C_P8_SPN - @m42a_lib.M42A	6B5
PEG_R2D_C_P<9>	PEG_R2D_C_P<9> - @m42a_lib.M42A	6B6 13B3
	PEG_R2D_C_P9_SPN - @m42a_lib.M42A	6B5
PEG_R2D_C_P<10>	PEG_R2D_C_P<10> - @m42a_lib.M42A	6B6 13B3
	PEG_R2D_C_P10_SPN - @m42a_lib.M42A	6B5
PEG_R2D_C_P<11>	PEG_R2D_C_P<11> - @m42a_lib.M42A	6B6 13B3
	PEG_R2D_C_P11_SPN - @m42a_lib.M42A	6B5
PEG_R2D_C_P<12>	PEG_R2D_C_P<12> - @m42a_lib.M42A	6B6 13A3
	PEG_R2D_C_P12_SPN - @m42a_lib.M42A	6B5
PEG_R2D_C_P<13>	PEG_R2D_C_P<13> - @m42a_lib.M42A	6B6 13A3
	PEG_R2D_C_P13_SPN - @m42a_lib.M42A	6B5
PEG_R2D_C_P<14>	PEG_R2D_C_P<14> - @m42a_lib.M42A	6B6 13A3
	PEG_R2D_C_P14_SPN - @m42a_lib.M42A	6B5
PEG_R2D_C_P<15>	PEG_R2D_C_P<15> - @m42a_lib.M42A	6B6 13A3
	PEG_R2D_C_P15_SPN - @m42a_lib.M42A	6B5
PLT_RST_BUF_L	PLT_RST_BUF_L - @m42a_lib.M42A	26B3
PLT_RST_GATED_L	PLT_RST_GATED_L - @m42a_lib.M42A	26A3
PLT_RST_L	PLT_RST_L - @m42a_lib.M42A	22A6 26C3
	NB_RST_IN_L - @m42a_lib.M42A	14B7 26C1
PM_BATLOW_L	PM_BATLOW_L - @m42a_lib.M42A	23C1 45B8
PM_BMBUSY_L	PM_BMBUSY_L - @m42a_lib.M42A	14B6 23C5
PM_CLKRUN_L	PM_CLKRUN_L - @m42a_lib.M42A	5C2 23C8 38A5 45D5 47C6 53C6
PM_DPRSLPVR	PM_DPRSLPVR - @m42a_lib.M42A	14B7 23C3 58D8
PM_DPRSLPVR_R	PM_DPRSLPVR_R - @m42a_lib.M42A	14B6
PM_EXTTS_L<0>	PM_EXTTS_L<0> - @m42a_lib.M42A	6B2 14B7 45B8
	DIMM_OVERTEMP_L - @m42a_lib.M42A	6B1 28C4 29C4
PM_LAN_ENABLE	PM_LAN_ENABLE - @m42a_lib.M42A	23C3 45D8
PM_PWRBTN_L	PM_PWRBTN_L - @m42a_lib.M42A	23C3 45D8
PM_RI_L	PM_RI_L - @m42a_lib.M42A	23D5
PM_RSMRST_L	PM_RSMRST_L - @m42a_lib.M42A	23C1 45D8
PM_SB_PWROK	PM_SB_PWROK - @m42a_lib.M42A	23C3 26A6
PM_SLP_S3	PM_SLP_S3 - @m42a_lib.M42A	48C8 63B7
PM_SLP_S3BATT	PM_SLP_S3BATT - @m42a_lib.M42A	60C7
PM_SLP_S3_L	PM_SLP_S3_L - @m42a_lib.M42A	23C3 45C5 63A7 63A7 63B8
PM_SLP_S3_LS12V6	PM_SLP_S3_LS12V6 - @m42a_lib.M42A	63B7
PM_SLP_S4_L	PM_SLP_S4_L - @m42a_lib.M42A	23C3 45C5 60C8 61B8 63D6
PM_SLP_S5_L	PM_SLP_S5_L - @m42a_lib.M42A	23C3 45C5 46D3
PM_STPCPU_L	PM_STPCPU_L - @m42a_lib.M42A	23C8 32C4
PM_STPPCI_L	PM_STPPCI_L - @m42a_lib.M42A	23C8 32C4
PM_SUS_STAT_L	PM_SUS_STAT_L - @m42a_lib.M42A	5C2 23C5 45D5 46D3 47C5 53C6
PM_SYSRST_L	PM_SYSRST_L - @m42a_lib.M42A	23C5 26C5 45C8
	XDP_DBRESET_L_R - @m42a_lib.M42A	26C6
PM_THRMTRIP_L	PM_THRMTRIP_L - @m42a_lib.M42A	7C6 14B6 21C2 46B3
PM_THRM_L	PM_THRM_L - @m42a_lib.M42A	23C8 45B8
PP0V9_S0	PP0V9_S0 - @m42a_lib.M42A	5A2 64D7
	=PP0V9_S0_MEM_TERM - @m42a_lib.M42A	30D4 64D6
	=PP0V9_S0_MEM_REG - @m42a_lib.M42A	31B3 63B2 64D8
	=PP0V9_S0_MEM_TERM - @m42a_lib.M42A	30D4 64D6
	=PP0V9_S0_MEM_REG - @m42a_lib.M42A	31B3 63B2 64D8
PP1V2_S0	PP1V2_S0 - @m42a_lib.M42A	63B4
PP1V2_S3	PP1V2_S3 - @m42a_lib.M42A	5A2 64C4
	=PP1V2_S3_REG - @m42a_lib.M42A	60B2 63B5 64C6
	=PP1V2_S3_ENET - @m42a_lib.M42A	36A8 36D7 64C3
	=PP1V2_S3_REG - @m42a_lib.M42A	60B2 63B5 64C6
	=PP1V2_S3_ENET - @m42a_lib.M42A	36A8 36D7 64C3
PP1V5_S0_DPLL	PP1V5_S0_DPLL - @m42a_lib.M42A	19D5
PP1V5_S0_NB_3GPLL_F	PP1V5_S0_NB_3GPLL_F - @m42a_lib.M42A	19A4
PP1V5_S0_NB_QTVDAC	PP1V5_S0_NB_QTVDAC - @m42a_lib.M42A	19A7
PP1V5_S0_NB_VCC3G	PP1V5_S0_NB_VCC3G - @m42a_lib.M42A	17D6 19B2
PP1V5_S0_NB_VCCA_3GPLL	PP1V5_S0_NB_VCCA_3GPLL - @m42a_lib.M42A	17D6 19A2
PP1V5_S0_NB_VCCA_DPLLA	PP1V5_S0_NB_VCCA_DPLLA - @m42a_lib.M42A	17C6 19D4
PP1V5_S0_NB_VCCA_DPLLB	PP1V5_S0_NB_VCCA_DPLLB - @m42a_lib.M42A	17C6 19D4
PP1V5_S0_NB_VCCA_HPLL	PP1V5_S0_NB_VCCA_HPLL - @m42a_lib.M42A	17C6 19C4
PP1V5_S0_NB_VCCA_MPLL	PP1V5_S0_NB_VCCA_MPLL - @m42a_lib.M42A	17C6 19C4
PP1V5_S0_NB_VCCD_QTVDAC	PP1V5_S0_NB_VCCD_QTVDAC - @m42a_lib.M42A	17B6 19A5
PP1V5_S0_NB_VCCD_TVDAC	PP1V5_S0_NB_VCCD_TVDAC - @m42a_lib.M42A	17C6 19A5
PP1V5_S0_REG_P	PP1V5_S0_REG_P - @m42a_lib.M42A	62B8
PP1V5_S0_SB_VCC1_5_B	PP1V5_S0_SB_VCC1_5_B - @m42a_lib.M42A	22C1 24D5 25B6
PP1V5_S0_SB_VCCDMIPLL	PP1V5_S0_SB_VCCDMIPLL - @m42a_lib.M42A	24B5 25A5
PP1V5_S0_SB_VCCDMIPLL_F	PP1V5_S0_SB_VCCDMIPLL_F - @m42a_lib.M42A	25A7

PP1V8_S0	PP1V8_S0 - @m42a_lib.M42A	5B2 64C7
	=PP1V8_S0_TMDS - @m42a_lib.M42A	64B6 68D6 68D6
	=PP1V8_S0_FET - @m42a_lib.M42A	63B3 64B8
	=PP1V8_S0_TMDS - @m42a_lib.M42A	64B6 68D6 68D6
	=PP1V8_S0_FET - @m42a_lib.M42A	63B3 64B8
PP1V8_S0_ANALOG_SDVO_F	PP1V8_S0_ANALOG_SDVO_F - @m42a_lib.M42A	68C4 68D3
PP1V8_S0_TMDS_F	PP1V8_S0_TMDS_F - @m42a_lib.M42A	68B4 68D3
PP1V8_S3	PP1V8_S3 - @m42a_lib.M42A	5A2 64C4
	=PP1V8_S3_1V2S3 - @m42a_lib.M42A	60B5 64C3
	=PP1V8_S3_MEM_NB_SENSE - @m42a_lib.M42A	61C4 64C3
	=PP1V8_S3_MEMVTT - @m42a_lib.M42A	31C6 64C3
	=PP1V8_S3_P1V8S0 - @m42a_lib.M42A	63A5 64C3
	=PP1V8_S3_REG - @m42a_lib.M42A	61B1 64C6
	=PP1V8_S3_MEM - @m42a_lib.M42A	19C7 19C8 28B2 28D4 28D6 29B2 29D4 29D6 64C3
	=PP1V8_S3_REG - @m42a_lib.M42A	61B1 64C6
	=PP1V8_S3_P1V8S0 - @m42a_lib.M42A	63A5 64C3
	=PP1V8_S3_MEM_NB_SENSE - @m42a_lib.M42A	61C4 64C3
	=PP1V8_S3_MEMVTT - @m42a_lib.M42A	31C6 64C3
	=PP1V8_S3_MEM - @m42a_lib.M42A	19C7 19C8 28B2 28D4 28D6 29B2 29D4 29D6 64C3
	=PP1V8_S3_1V2S3 - @m42a_lib.M42A	60B5 64C3
PP1V8_S3_MEMVTT_VDDQ	PP1V8_S3_MEMVTT_VDDQ - @m42a_lib.M42A	31C5
PP1V8_S3_R	PP1V8_S3_R - @m42a_lib.M42A	61B2
PP2V5_S0_NB_CRTDAC_F	PP2V5_S0_NB_CRTDAC_F - @m42a_lib.M42A	19D3
PP2V5_S0_NB_CRTDAC_FOLLOW	PP2V5_S0_NB_CRTDAC_FOLLOW - @m42a_lib.M42A	19D3
PP2V5_S0_NB_VCCA_CRTDAC	PP2V5_S0_NB_VCCA_CRTDAC - @m42a_lib.M42A	17D6 19D1
PP2V5_S3	PP2V5_S3 - @m42a_lib.M42A	5A2 64C4
	=PP2V5_S3_REG - @m42a_lib.M42A	60C2 64C6
	=PP2V5_S3_ENET - @m42a_lib.M42A	36D3 64C3
	=PP2V5_S3_REG - @m42a_lib.M42A	60C2 64C6
	=PP2V5_S3_ENET - @m42a_lib.M42A	36D3 64C3
PP2V5_S3_ENET_AVDD	PP2V5_S3_ENET_AVDD - @m42a_lib.M42A	36D5 37D8
PP2V5_S3_ENET_AVDD_F	PP2V5_S3_ENET_AVDD_F - @m42a_lib.M42A	37D7
PP3V3_AUDIO_CODEC	PP3V3_AUDIO_CODEC - @m42a_lib.M42A	54D6
PP3V3_AVREF_SMC	PP3V3_AVREF_SMC - @m42a_lib.M42A	45D2 46C6
PP3V3_G3C_SB_RTC_D	PP3V3_G3C_SB_RTC_D - @m42a_lib.M42A	26D4
	PP3V3_S5_SB_RTC - @m42a_lib.M42A	21D6 24B3 25A4 26D3
PP3V3_LCDVDD_SW	PP3V3_LCDVDD_SW - @m42a_lib.M42A	67C5
PP3V3_LCDVDD_SW_F	PP3V3_LCDVDD_SW_F - @m42a_lib.M42A	67B2
PP3V3_S0_ANALOG_SDVO_F	PP3V3_S0_ANALOG_SDVO_F - @m42a_lib.M42A	68C4 68D6
PP3V3_S0_ANALOG_TMDS_F	PP3V3_S0_ANALOG_TMDS_F - @m42a_lib.M42A	68B1 68B4 68D6
PP3V3_S0_AUDIO_F	PP3V3_S0_AUDIO_F - @m42a_lib.M42A	57B3 57C8 57C8 57D8
PP3V3_S0_AUDIO_SPDIF	PP3V3_S0_AUDIO_SPDIF - @m42a_lib.M42A	56B8 56D8
PP3V3_S0_CK410_VDD48	PP3V3_S0_CK410_VDD48 - @m42a_lib.M42A	32D5
PP3V3_S0_CK410_VDDA	PP3V3_S0_CK410_VDDA - @m42a_lib.M42A	32C7
PP3V3_S0_CK410_VDD_CPU_SRC	PP3V3_S0_CK410_VDD_CPU_SRC - @m42a_lib.M42A	32D6
PP3V3_S0_CK410_VDD_PCI	PP3V3_S0_CK410_VDD_PCI - @m42a_lib.M42A	32D5
PP3V3_S0_CK410_VDD_REF	PP3V3_S0_CK410_VDD_REF - @m42a_lib.M42A	32C5
PP3V3_S0_IMVP6_3V3	PP3V3_S0_IMVP6_3V3 - @m42a_lib.M42A	58D7
PP3V3_S0_LCD_F	PP3V3_S0_LCD_F - @m42a_lib.M42A	67B3
PP3V3_S0_NB_TVDAC	PP3V3_S0_NB_TVDAC - @m42a_lib.M42A	19C3
PP3V3_S0_NB_TVDAC_F	PP3V3_S0_NB_TVDAC_F - @m42a_lib.M42A	19C2
PP3V3_S0_NB_TVDAC_FOLLOW	PP3V3_S0_NB_TVDAC_FOLLOW - @m42a_lib.M42A	19C3
PP3V3_S0_NB_VCCA_TVBG	PP3V3_S0_NB_VCCA_TVBG - @m42a_lib.M42A	17C6 19B1
PP3V3_S0_NB_VCCA_TVDACA	PP3V3_S0_NB_VCCA_TVDACA - @m42a_lib.M42A	17C6 19C1
PP3V3_S0_NB_VCCA_TVDACB	PP3V3_S0_NB_VCCA_TVDACB - @m42a_lib.M42A	17C6 19B1
PP3V3_S0_NB_VCCA_TVDACC	PP3V3_S0_NB_VCCA_TVDACC - @m42a_lib.M42A	17C6 19B1
PP3V3_S0_PVCC1_TMDS_F	PP3V3_S0_PVCC1_TMDS_F - @m42a_lib.M42A	68C4 68C6
PP3V3_S0_PVCC2_TMDS_F	PP3V3_S0_PVCC2_TMDS_F - @m42a_lib.M42A	68C4 68C7
PP3V3_S0_TPM_3VSB	PP3V3_S0_TPM_3VSB - @m42a_lib.M42A	53C4
PP3V3_S3	PP3V3_S3 - @m42a_lib.M42A	5A2 64B4
	=PP3V3_S3_PDCISENS - @m42a_lib.M42A	61C1 64B3
	=PP3V3_S3_FW - @m42a_lib.M42A	38D5 64B3
	=PP3V3_S3_AIRPORT_AUX - @m42a_lib.M42A	43C3 64B3
	=PP3V3_S3_RSTGATE - @m42a_lib.M42A	26B3 64B3
	=PP3V3_S3_PCI - @m42a_lib.M42A	38C5 64B3
	=PP3V3_S3_SMS - @m42a_lib.M42A	46D5 52C7 64B3
	=PP3V3_S3_TPM - @m42a_lib.M42A	46D5 53C2 64B3
	=PP3V3_S3_2V5S3 - @m42a_lib.M42A	60C4 60D6 64B3
	=PP3V3_S3_ENET - @m42a_lib.M42A	36A5 36B4 36B5 36C8 36D6 36D8 64B3
	=PP3V3_S3_BT - @m42a_lib.M42A	44C6 64B3
	=PP3V3_S3_FET - @m42a_lib.M42A	63D3 64B6
	=PP3V3_S3_SMBUS_SMC_RMT - @m42a_lib.M42A	27D3 64B3
	=PP3V3_S3_TPM - @m42a_lib.M42A	46D5 53C2 64B3
	=PP3V3_S3_SMS - @m42a_lib.M42A	46D5 52C7 64B3
	=PP3V3_S3_SMBUS_SMC_RMT - @m42a_lib.M42A	27D3 64B3
	=PP3V3_S3_RSTGATE - @m42a_lib.M42A	26B3 64B3
	=PP3V3_S3_PDCISENS - @m42a_lib.M42A	61C1 64B3
	=PP3V3_S3_PCI - @m42a_lib.M42A	38C5 64B3
	=PP3V3_S3_FW - @m42a_lib.M42A	38D5 64B3
	=PP3V3_S3_FET - @m42a_lib.M42A	63D3 64B6
	=PP3V3_S3_ENET - @m42a_lib.M42A	36A5 36B4 36B5 36C8 36D6 36D8 64B3
	=PP3V3_S3_BT - @m42a_lib.M42A	44C6 64B3
	=PP3V3_S3_AIRPORT_AUX - @m42a_lib.M42A	43C3 64B3
	=PP3V3_S3_2V5S3 - @m42a_lib.M42A	60C4 60D6 64B3
PP3V3_S3_AIRPORT_AUX_CONN	PP3V3_S3_AIRPORT_AUX_CONN - @m42a_lib.M42A	43C4
PP3V3_S3_BT_F	PP3V3_S3_BT_F - @m42a_lib.M42A	44C4
PP3V3_S3_FW_AVDD	PP3V3_S3_FW_AVDD - @m42a_lib.M42A	38D3
PP3V3_S3_ST_ACCEL	PP3V3_S3_ST_ACCEL - @m42a_lib.M42A	52B6
PP3V3_S5	PP3V3_S5 - @m42a_lib.M42A	5A2 64A4
	=PP3V3_S5_LCD - @m42a_lib.M42A	64A3 67C7
	=PP3V3_S5_FWLATEVG - @m42a_lib.M42A	39A8 64A3

www.laptopblue.vn

	=PP3V3_S5_P3V3S3 - @m42a_lib.M42A	63D5 64A3
	=PP3V3_S5_P3V3S0 - @m42a_lib.M42A	63C5 64A3
	=PP3V3_S5_ROM - @m42a_lib.M42A	50D4 64A3
	=PP3V3_S5_SB_3V3_1V5_VCCSUSHDA - @m42a_lib.M42A	24C3 64A3
	=PP3V3_S5_SB_IO - @m42a_lib.M42A	22C6 64A3
	=PP3V3_S5_SB_VCCSUS3_3_USB - @m42a_lib.M42A	24B3 25D2 64A3
	=PP3V3_S5_SB_PM - @m42a_lib.M42A	11B5 23D1 26C5 64A3
	=PP3V3_S5_SB_VCCSUS3_3 - @m42a_lib.M42A	24A5 24B3 25B6 25D2 64A3
	=PP3V3_S5_REG - @m42a_lib.M42A	59B8 64A6
	=PP3V3_S5_SB - @m42a_lib.M42A	23A7 23B7 23D4 23D8 25C8 64A3
	=PP3V3_S5_SB_USB - @m42a_lib.M42A	22D8 64A3
	=PP3V3_S5_SB_VCCSUS3_3_USB - @m42a_lib.M42A	24B3 25D2 64A3
	=PP3V3_S5_SB_VCCSUS3_3 - @m42a_lib.M42A	24A5 24B3 25B6 25D2 64A3
	=PP3V3_S5_SB_USB - @m42a_lib.M42A	22D8 64A3
	=PP3V3_S5_SB_PM - @m42a_lib.M42A	11B5 23D1 26C5 64A3
	=PP3V3_S5_SB_IO - @m42a_lib.M42A	22C6 64A3
	=PP3V3_S5_SB_3V3_1V5_VCCSUSHDA - @m42a_lib.M42A	24C3 64A3
	=PP3V3_S5_SB - @m42a_lib.M42A	23A7 23B7 23D4 23D8 25C8 64A3
	=PP3V3_S5_ROM - @m42a_lib.M42A	50D4 64A3
	=PP3V3_S5_REG - @m42a_lib.M42A	59B8 64A6
	=PP3V3_S5_P3V3S3 - @m42a_lib.M42A	63D5 64A3
	=PP3V3_S5_P3V3S0 - @m42a_lib.M42A	63C5 64A3
	=PP3V3_S5_LCD - @m42a_lib.M42A	64A3 67C7
	=PP3V3_S5_FWLATEVG - @m42a_lib.M42A	39A8 64A3
PP3V3_S5_FWLATEVG	PP3V3_S5_FWLATEVG - @m42a_lib.M42A	39A6 39B5
PP3V3_S5_FWLATEVG_F	PP3V3_S5_FWLATEVG_F - @m42a_lib.M42A	39A7
PP3V3_S5_REG_P	PP3V3_S5_REG_P - @m42a_lib.M42A	59B8
PP3V42G3H_SW	PP3V42G3H_SW - @m42a_lib.M42A	63D2
PP3V42_G3H_LIDSWITCH_F	PP3V42_G3H_LIDSWITCH_F - @m42a_lib.M42A	65A7
PP3V42_G3H_SMC_CLK_F	PP3V42_G3H_SMC_CLK_F - @m42a_lib.M42A	46A7
PP3V42_ONEWIRE	PP3V42_ONEWIRE - @m42a_lib.M42A	65C7
PP4V5_AUDIO_ANALOG	PP4V5_AUDIO_ANALOG - @m42a_lib.M42A	54A3 54D2 57C3 57C5
PP5V_INV	PP5V_INV - @m42a_lib.M42A	67D5
PP5V_INV_F	PP5V_INV_F - @m42a_lib.M42A	5B1 67D3
PP5V_S0_AUDIO	PP5V_S0_AUDIO - @m42a_lib.M42A	5D1
PP5V_S0_AUDIO_F	PP5V_S0_AUDIO_F - @m42a_lib.M42A	55B8 55B8 55C4
PP5V_S0_AUDIO_PWR	PP5V_S0_AUDIO_PWR - @m42a_lib.M42A	5D1
PP5V_S0_DVIPORT	PP5V_S0_DVIPORT - @m42a_lib.M42A	68A6 69B4 69C3
PP5V_S0_DVIPORT_D	PP5V_S0_DVIPORT_D - @m42a_lib.M42A	68A8 69C5
PP5V_S0_IMVP6_VDD	PP5V_S0_IMVP6_VDD - @m42a_lib.M42A	58D7
PP5V_S0_SB_V5REF	PP5V_S0_SB_V5REF - @m42a_lib.M42A	24D5 25D7
PP5V_S0_TMDS_FUSE	PP5V_S0_TMDS_FUSE - @m42a_lib.M42A	69C5
PP5V_S3	PP5V_S3 - @m42a_lib.M42A	5A2 64B4
	=PP5V_S3_IR - @m42a_lib.M42A	41D6 64B3
	=PP5V_S3_GEYSER - @m42a_lib.M42A	40D6 64B3
	=PP5V_S3_CAMERA - @m42a_lib.M42A	64B3 67A5
	=PP5V_S3_FET - @m42a_lib.M42A	63D3 64B6
	=PP5V_S3_SYSLED - @m42a_lib.M42A	35B6 46B4 64B3
	=PP5V_S3_IR - @m42a_lib.M42A	41D6 64B3
	=PP5V_S3_GEYSER - @m42a_lib.M42A	40D6 64B3
	=PP5V_S3_FET - @m42a_lib.M42A	63D3 64B6
	=PP5V_S3_CAMERA - @m42a_lib.M42A	64B3 67A5
PP5V_S3_CAMERA_F	PP5V_S3_CAMERA_F - @m42a_lib.M42A	67A3
PP5V_S3_GEYSER_F	PP5V_S3_GEYSER_F - @m42a_lib.M42A	40D5
PP5V_S3_SYSLED_F	PP5V_S3_SYSLED_F - @m42a_lib.M42A	35B8
PP5V_S3_USB2_EXTA	PP5V_S3_USB2_EXTA - @m42a_lib.M42A	42C7
PP5V_S3_USB2_EXTA_F	PP5V_S3_USB2_EXTA_F - @m42a_lib.M42A	42D2 42D3
PP5V_S3_USB2_EXTB	PP5V_S3_USB2_EXTB - @m42a_lib.M42A	42C7
PP5V_S3_USB2_EXTB_F	PP5V_S3_USB2_EXTB_F - @m42a_lib.M42A	42B2 42C3
PP5V_S5	PP5V_S5 - @m42a_lib.M42A	5A2 64A4
	=PP5V_S5_1V8S3 - @m42a_lib.M42A	61C7 64A3
	=PP5V_S5_PATA - @m42a_lib.M42A	34D6 64A3
	=PP5V_S5_USB - @m42a_lib.M42A	42C8 64A3
	=PP5V_S5_P5VS0 - @m42a_lib.M42A	63C5 64A3
	=PP5V_S5_PWRCTL - @m42a_lib.M42A	63A7 63D6 64A3
	=PP5V_S5_REG - @m42a_lib.M42A	59B1 64A6
	=PP5V_S5_P5VS3 - @m42a_lib.M42A	63D5 64A3
	=PP5V_S5_SB - @m42a_lib.M42A	25C8 64A3
	=PP5V_S5_USB - @m42a_lib.M42A	42C8 64A3
	=PP5V_S5_SB - @m42a_lib.M42A	25C8 64A3
	=PP5V_S5_REG - @m42a_lib.M42A	59B1 64A6
	=PP5V_S5_PWRCTL - @m42a_lib.M42A	63A7 63D6 64A3
	=PP5V_S5_PATA - @m42a_lib.M42A	34D6 64A3
	=PP5V_S5_P5VS3 - @m42a_lib.M42A	63D5 64A3
	=PP5V_S5_P5VS0 - @m42a_lib.M42A	63C5 64A3
	=PP5V_S5_1V8S3 - @m42a_lib.M42A	61C7 64A3
PP5V_S5_1V51V05S0_INTVCC	PP5V_S5_1V51V05S0_INTVCC - @m42a_lib.M42A	62A2 62C3 62C6
PP5V_S5_5V3V3S5_INTVCC	PP5V_S5_5V3V3S5_INTVCC - @m42a_lib.M42A	59A2 59C3 59C6
PP5V_S5_REG_P	PP5V_S5_REG_P - @m42a_lib.M42A	59A6 59B1
PP5V_S5_SB_V5REF_SUS	PP5V_S5_SB_V5REF_SUS - @m42a_lib.M42A	24D5 25C7
PP18V5_DCIN	PP18V5_DCIN - @m42a_lib.M42A	65D4
PP18V5_DCIN_F	PP18V5_DCIN_F - @m42a_lib.M42A	65D7
PP18V5_DCIN_ONEWIRE	PP18V5_DCIN_ONEWIRE - @m42a_lib.M42A	65C6
PP18V5_G3H	PP18V5_G3H - @m42a_lib.M42A	5A2 64C1
	=PP18V5_G3H_INRUSH - @m42a_lib.M42A	64C3 65D1
	=PP18V5_G3H_CHGR - @m42a_lib.M42A	64C1 66D8
	=PP18V5_G3H_INRUSH - @m42a_lib.M42A	64C3 65D1
	=PP18V5_G3H_CHGR - @m42a_lib.M42A	64C1 66D8
PP18V5_S5_CHGR_SW_R	PP18V5_S5_CHGR_SW_R - @m42a_lib.M42A	66C4
PPBUSA_G3H	PPBUSA_G3H - @m42a_lib.M42A	5A2
PPBUSB_G3H	PPBUSB_G3H - @m42a_lib.M42A	5A2 64C1
	=PPBUS_S5_YUKON_CTRL - @m42a_lib.M42A	60C8 64C1
	=PPVIN_S5_IMVP6 - @m42a_lib.M42A	48C7 58C2 58D5 58D8 64C1
	=PPVIN_S5_1V51V05S0 - @m42a_lib.M42A	62D8 64C1
	=PPBUSB_G3H - @m42a_lib.M42A	64C3 66C2
	=PPBUS_S5_INV - @m42a_lib.M42A	64C1 67D4
	=PPBUS_S5_FWPWRSW - @m42a_lib.M42A	39D6 64C1
	=PPVIN_S5_5V3V3S5 - @m42a_lib.M42A	59D8 63B7 64C1
	=PPVIN_S5_1V8S3 - @m42a_lib.M42A	61C7 64C1
	=PPVIN_S5_IMVP6 - @m42a_lib.M42A	48C7 58C2 58D5 58D8 64C1
	=PPVIN_S5_5V3V3S5 - @m42a_lib.M42A	59D8 63B7 64C1
	=PPVIN_S5_1V8S3 - @m42a_lib.M42A	61C7 64C1
	=PPVIN_S5_1V51V05S0 - @m42a_lib.M42A	62D8 64C1

	=PPBUS_S5_YUKON_CTRL - @m42a_lib.M42A	60C8 64C1
	=PPBUS_S5_INV - @m42a_lib.M42A	64C1 67D4
	=PPBUS_S5_FWPWRSW - @m42a_lib.M42A	39D6 64C1
	=PPBUSB_G3H - @m42a_lib.M42A	64C3 66C2
	=PPBUSA_G3H - @m42a_lib.M42A	64C3 66C2
PPBUS_ALL_INV_CONN	PPBUS_ALL_INV_CONN - @m42a_lib.M42A	5B1 67D3
PPBUS_S5_FWPWRSW_F	PPBUS_S5_FWPWRSW_F - @m42a_lib.M42A	39D6
PPDCIN_G3H_R	PPDCIN_G3H_R - @m42a_lib.M42A	65D4
PPFW_PORT0_VP	PPFW_PORT0_VP - @m42a_lib.M42A	39C2
PPFW_PORT0_VP_F	PPFW_PORT0_VP_F - @m42a_lib.M42A	39C3
PPFW_SWITCH	PPFW_SWITCH - @m42a_lib.M42A	5B2 39D4
PPVBATT_G3C_RTC	PPVBATT_G3C_RTC - @m42a_lib.M42A	26D6
PPVBATT_G3C_RTC_R	PPVBATT_G3C_RTC_R - @m42a_lib.M42A	26D5
PPVBATT_G3H_PRE	PPVBATT_G3H_PRE - @m42a_lib.M42A	66B3
PPVBATT_G3H_R	PPVBATT_G3H_R - @m42a_lib.M42A	66B2
PPVBAT_G3H_CHGR_OUT	PPVBAT_G3H_CHGR_OUT - @m42a_lib.M42A	5C1 66B5 66C2
PPVBAT_G3H_CHGR_REG	PPVBAT_G3H_CHGR_REG - @m42a_lib.M42A	66C4
PPVCORE_CPU_S0	PPVCORE_CPU_S0 - @m42a_lib.M42A	5B2 64D7
	=PPVCORE_S0_CPU - @m42a_lib.M42A	8B5 8D7 9B8 48A5 48B3 64D6
	=PPVOUT_S0_IMVP6_REG - @m42a_lib.M42A	58D1 64D8
	=PPVCORE_S0_CPU - @m42a_lib.M42A	8B5 8D7 9B8 48A5 48B3 64D6
PPVDCIN_G3H_PRE	PPVDCIN_G3H_PRE - @m42a_lib.M42A	66D4
PPVIN_S5_1V51V05S0_R	PPVIN_S5_1V51V05S0_R - @m42a_lib.M42A	62C5
PPVIN_S5_5V3V3S5_R	PPVIN_S5_5V3V3S5_R - @m42a_lib.M42A	59C5
PPVIN_S5_IMVP6_VIN	PPVIN_S5_IMVP6_VIN - @m42a_lib.M42A	58D7
RSMRST_PWRGD	RSMRST_PWRGD - @m42a_lib.M42A	45D8 46D6 59A1
	5V3V3S5_PGOOD - @m42a_lib.M42A	59A2
S0PWRGD_0V9_DIV	S0PWRGD_0V9_DIV - @m42a_lib.M42A	63B2
S0PWRGD_1V2_DIV	S0PWRGD_1V2_DIV - @m42a_lib.M42A	63A2
S0PWRGD_OK	S0PWRGD_OK - @m42a_lib.M42A	63B2
SATA_A_D2R_N	SATA_A_D2R_N - @m42a_lib.M42A	6C4 21B6
	SATA_A_D2R_N_SPN - @m42a_lib.M42A	6C3
SATA_A_D2R_P	SATA_A_D2R_P - @m42a_lib.M42A	6C4 21B6
	SATA_A_D2R_P_SPN - @m42a_lib.M42A	6C3
SATA_A_R2D_C_N	SATA_A_R2D_C_N - @m42a_lib.M42A	6C4 21B6
	SATA_A_R2D_C_N_SPN - @m42a_lib.M42A	6C3
SATA_A_R2D_C_P	SATA_A_R2D_C_P - @m42a_lib.M42A	6C4 21B6
	SATA_A_R2D_C_P_SPN - @m42a_lib.M42A	6C3
SATA_C_D2R_C_N	SATA_C_D2R_C_N - @m42a_lib.M42A	35D7
SATA_C_D2R_C_P	SATA_C_D2R_C_P - @m42a_lib.M42A	35C7
SATA_C_D2R_F_N	SATA_C_D2R_F_N - @m42a_lib.M42A	35D5
SATA_C_D2R_F_P	SATA_C_D2R_F_P - @m42a_lib.M42A	35C5
SATA_C_D2R_N	SATA_C_D2R_N - @m42a_lib.M42A	21B6 35D4
SATA_C_D2R_P	SATA_C_D2R_P - @m42a_lib.M42A	21B6 35C4
SATA_C_DET_L	SATA_C_DET_L - @m42a_lib.M42A	23D2 35D2
SATA_C_PWR_EN_L	SATA_C_PWR_EN_L - @m42a_lib.M42A	23A3 23B3
SATA_C_R2D_C_N	SATA_C_R2D_C_N - @m42a_lib.M42A	21B6 35D4
SATA_C_R2D_C_P	SATA_C_R2D_C_P - @m42a_lib.M42A	21B6 35D4
SATA_C_R2D_F_N	SATA_C_R2D_F_N - @m42a_lib.M42A	35D6
SATA_C_R2D_F_P	SATA_C_R2D_F_P - @m42a_lib.M42A	35D6
SATA_C_R2D_N	SATA_C_R2D_N - @m42a_lib.M42A	35D7
SATA_C_R2D_P	SATA_C_R2D_P - @m42a_lib.M42A	35D7
SATA_RBIAS_N	SATA_RBIAS_N - @m42a_lib.M42A	21B6 35D2
	SATA_RBIAS_P - @m42a_lib.M42A	21B6 35D2
	SATA_RBIAS_PN - @m42a_lib.M42A	35D3
	SATA_RBIAS_P - @m42a_lib.M42A	21B6 35D2
SB_A20GATE	SB_A20GATE - @m42a_lib.M42A	21C4
SB_ACZ_BITCLK	SB_ACZ_BITCLK - @m42a_lib.M42A	21C6
SB_ACZ_RST_L	SB_ACZ_RST_L - @m42a_lib.M42A	21C6
SB_ACZ_SDATAOUT	SB_ACZ_SDATAOUT - @m42a_lib.M42A	21C6
SB_ACZ_SYNC	SB_ACZ_SYNC - @m42a_lib.M42A	21C6
SB_CLK14P3M_TIMER	SB_CLK14P3M_TIMER - @m42a_lib.M42A	23D3 33A6
SB_CLK48M_USBCTLR	SB_CLK48M_USBCTLR - @m42a_lib.M42A	23D3 33C7
SB_CLK100M_DMI_N	SB_CLK100M_DMI_N - @m42a_lib.M42A	22C2 33B2 33C3
SB_CLK100M_DMI_P	SB_CLK100M_DMI_P - @m42a_lib.M42A	22C2 33B2 33C3
SB_CLK100M_SATA_N	SB_CLK100M_SATA_N - @m42a_lib.M42A	21B6 33B2 33B3
SB_CLK100M_SATA_OE_L	SB_CLK100M_SATA_OE_L - @m42a_lib.M42A	23C3 32B4
SB_CLK100M_SATA_P	SB_CLK100M_SATA_P - @m42a_lib.M42A	21B6 33B2 33B3
SB_GPIO2	SB_GPIO2 - @m42a_lib.M42A	22A6 26C3
SB_GPIO3	SB_GPIO3 - @m42a_lib.M42A	22A6 23A4 26C3
SB_GPIO4	SB_GPIO4 - @m42a_lib.M42A	22A6 26C3
SB_GPIO5	SB_GPIO5 - @m42a_lib.M42A	22A6 26C3 34C8
	ODD_PWR_EN_L - @m42a_lib.M42A	34C8
SB_GPIO14	SB_GPIO14 - @m42a_lib.M42A	23A4 23C3
SB_GPIO19	SB_GPIO19 - @m42a_lib.M42A	23D3
SB_GPIO21	SB_GPIO21 - @m42a_lib.M42A	23D3
SB_GPIO26	SB_GPIO26 - @m42a_lib.M42A	23C8
SB_GPIO29	SB_GPIO29 - @m42a_lib.M42A	22C4 22D8
SB_GPIO30	SB_GPIO30 - @m42a_lib.M42A	22C4 22D8 36D8
SB_GPIO31	SB_GPIO31 - @m42a_lib.M42A	22C4 22D8
SB_GPIO37	SB_GPIO37 - @m42a_lib.M42A	23D3
SB_INTVRMEN	SB_INTVRMEN - @m42a_lib.M42A	21D6
SB_RTC_RST_L	SB_RTC_RST_L - @m42a_lib.M42A	21D6 26D4
SB_RTC_X1	SB_RTC_X1 - @m42a_lib.M42A	21D6 26C8
SB_RTC_X1_R	SB_RTC_X1_R - @m42a_lib.M42A	26C7
SB_RTC_X2	SB_RTC_X2 - @m42a_lib.M42A	21D6 26C8
SB_RUNTIME_SCI_L	SB_RUNTIME_SCI_L - @m42a_lib.M42A	23C5
SB_SM_INTRUDER_L	SB_SM_INTRUDER_L - @m42a_lib.M42A	21D6 26D4
SB_SPKR	SB_SPKR - @m42a_lib.M42A	23C5
SC_RX_L	SC_RX_L - @m42a_lib.M42A	45C5 46B1
SC_TX_L	SC_TX_L - @m42a_lib.M42A	45C5 46B1
SDATAIN	SDATAIN - @m42a_lib.M42A	54C6
SDVO_CTRLCLK	SDVO_CTRLCLK - @m42a_lib.M42A	14B6 68A6
SDVO_CTRLDATA	SDVO_CTRLDATA - @m42a_lib.M42A	14B6 68A6
SMBUS_BATT_SCL_F	SMBUS_BATT_SCL_F - @m42a_lib.M42A	5D1 65B6
SMBUS_BATT_SDA_F	SMBUS_BATT_SDA_F - @m42a_lib.M42A	5D1 65A6
SMB_0_CLK	SMB_0_CLK - @m42a_lib.M42A	27D6 45C8
	SMBUS_SMC_0_SCL - @m42a_lib.M42A	27D5
	THRM_DIMM1_SMB_CLK - @m42a_lib.M42A	27D3 49B4
	SMBUS_SMC_0_SCL - @m42a_lib.M42A	27D5
SMB_0_DATA	SMB_0_DATA - @m42a_lib.M42A	27D6 45C5
	SMBUS_SMC_0_SDA - @m42a_lib.M42A	27D5
	THRM_DIMM1_SMB_DATA - @m42a_lib.M42A	27C3 49B4
	SMBUS_SMC_0_SDA - @m42a_lib.M42A	27D5
SMB_AIRPORT_CONN_CLK	SMB_AIRPORT_CONN_CLK - @m42a_lib.M42A	43B5
SMB_AIRPORT_CONN_DATA	SMB_AIRPORT_CONN_DATA - @m42a_lib.M42A	43B5
SMB_ALERT_L	SMB_ALERT_L - @m42a_lib.M42A	23C5
SMB_BSA_CLK	SMB_BSA_CLK - @m42a_lib.M42A	27C3 45B5
	SMBUS_SMC_BSA_SCL - @m42a_lib.M42A	27C2
	=SMBUS_BATT_SCL - @m42a_lib.M42A	27C1 65A2
	SMBUS_SMC_BSA_SCL - @m42a_lib.M42A	27C2
	=SMBUS_BATT_SCL - @m42a_lib.M42A	27C1 65A2
SMB_BSA_DATA	SMB_BSA_DATA - @m42a_lib.M42A	27C3 45B5

	SMBUS_SMC_BSA_SDA - @m42a_lib.M42A	27C2
	=SMBUS_BATT_SDA - @m42a_lib.M42A	27C1 65A2
	SMBUS_SMC_BSA_SDA - @m42a_lib.M42A	27C2
	=SMBUS_BATT_SDA - @m42a_lib.M42A	27C1 65A2
SMB_BSB_CLK	SMB_BSB_CLK - @m42a_lib.M42A	27B3 45C5
SMB_BSB_DATA	SMB_BSB_DATA - @m42a_lib.M42A	27B3 45C8
SMB_LINK_ALERT_L	SMB_LINK_ALERT_L - @m42a_lib.M42A	23D5
SMB_MLB_CLK	SMB_MLB_CLK - @m42a_lib.M42A	27C6 45B5
	THRM_DIMM0_SMB_CLK - @m42a_lib.M42A	27B3 49C4
	SMBUS_SMC_MLB_SCL - @m42a_lib.M42A	5B2 27C5
	SMB_THRM_CLK - @m42a_lib.M42A	10B3 27C3
	THRM_DIMM0_SMB_CLK - @m42a_lib.M42A	27B3 49C4
	SMB_THRM_CLK - @m42a_lib.M42A	10B3 27C3
	SMBUS_SMC_MLB_SCL - @m42a_lib.M42A	5B2 27C5
SMB_MLB_DATA	SMB_MLB_DATA - @m42a_lib.M42A	27B6 45B5
	THRM_DIMM0_SMB_DATA - @m42a_lib.M42A	27B3 49C4
	SMBUS_SMC_MLB_SDA - @m42a_lib.M42A	5B2 27B5
	SMB_THRM_DATA - @m42a_lib.M42A	10B3 27B3
	THRM_DIMM0_SMB_DATA - @m42a_lib.M42A	27B3 49C4
	SMB_THRM_DATA - @m42a_lib.M42A	10B3 27B3
	SMBUS_SMC_MLB_SDA - @m42a_lib.M42A	5B2 27B5
SMC_AVCC_RC	SMC_AVCC_RC - @m42a_lib.M42A	45D3
SMC_BATT_CHG_EN	SMC_BATT_CHG_EN - @m42a_lib.M42A	5C1 45D8 46B6 66A4
SMC_BATT_ISENSE	SMC_BATT_ISENSE - @m42a_lib.M42A	45D5 66B1
SMC_BATT_ISET	SMC_BATT_ISET - @m42a_lib.M42A	5C1 45B5 66B7
SMC_BATT_TRICKLE_EN_L	SMC_BATT_TRICKLE_EN_L - @m42a_lib.M42A	5C1 45D8 46B6 66A3
SMC_BATT_VSET	SMC_BATT_VSET - @m42a_lib.M42A	45B5 46C3
SMC_BC_ACOK	SMC_BC_ACOK - @m42a_lib.M42A	5C1 45C5 46B6 65C3 65C7 66A5
SMC_BKLIGHT_ENABLE	SMC_BKLIGHT_ENABLE - @m42a_lib.M42A	45C8
SMC_BS_ALRT_L	SMC_BS_ALRT_L - @m42a_lib.M42A	5D1 45C5 46C6 65A2
SMC_BS_ALRT_L_F	SMC_BS_ALRT_L_F - @m42a_lib.M42A	65A6
SMC_CASE_OPEN	SMC_CASE_OPEN - @m42a_lib.M42A	45C5 46B3
SMC_CPU_ISENSE	SMC_CPU_ISENSE - @m42a_lib.M42A	45D5 48C1
SMC_CPU_RESET_3_3_L	SMC_CPU_RESET_3_3_L - @m42a_lib.M42A	45B5 46C1
SMC_CPU_VSENSE	SMC_CPU_VSENSE - @m42a_lib.M42A	5B2 45D5 48B1
SMC_DCIN_ISENSE	SMC_DCIN_ISENSE - @m42a_lib.M42A	45D5 66C2
SMC_DISPLAY_ENABLE	SMC_DISPLAY_ENABLE - @m42a_lib.M42A	45C8
SMC_DISP_BKLT_A	SMC_DISP_BKLT_A - @m42a_lib.M42A	45B5
SMC_DISP_BKLT_B	SMC_DISP_BKLT_B - @m42a_lib.M42A	45B5 46C3
SMC_EXCARD_CP	SMC_EXCARD_CP - @m42a_lib.M42A	45B8 46C3
SMC_EXCARD_PWR_EN	SMC_EXCARD_PWR_EN - @m42a_lib.M42A	45B8 46C3
SMC_EXCARD_PWR_OC_L	SMC_EXCARD_PWR_OC_L - @m42a_lib.M42A	45B8 46D3
SMC_EXTAL	SMC_EXTAL - @m42a_lib.M42A	45C4 46C7
SMC_EXTSMI_L	SMC_EXTSMI_L - @m42a_lib.M42A	23B8 45B8
SMC_FAN_0_CTL	SMC_FAN_0_CTL - @m42a_lib.M42A	45B8 46C3
SMC_FAN_0_TACH	SMC_FAN_0_TACH - @m42a_lib.M42A	45B8 46C3
SMC_FAN_1_CTL	SMC_FAN_1_CTL - @m42a_lib.M42A	5D2 45B8 51B4
SMC_FAN_1_TACH	SMC_FAN_1_TACH - @m42a_lib.M42A	5D2 45B8 51C4
SMC_FAN_2_CTL	SMC_FAN_2_CTL - @m42a_lib.M42A	45B8 46C3
SMC_FAN_2_TACH	SMC_FAN_2_TACH - @m42a_lib.M42A	45B8 46C3
SMC_FAN_3_CTL	SMC_FAN_3_CTL - @m42a_lib.M42A	45B8 46C3
SMC_FAN_3_TACH	SMC_FAN_3_TACH - @m42a_lib.M42A	5A7 45B8 46C3
SMC_FWE	SMC_FWE - @m42a_lib.M42A	45B5 46C6
SMC_FWIRE_ISENSE	SMC_FWIRE_ISENSE - @m42a_lib.M42A	45D5 46B3
SMC_GPU_ISENSE	SMC_GPU_ISENSE - @m42a_lib.M42A	45D5 46C6
SMC_GPU_VSENSE	SMC_GPU_VSENSE - @m42a_lib.M42A	45D5 46C6
SMC_LID	SMC_LID - @m42a_lib.M42A	5B2 40C4 45B5 46C6 65A8
SMC_LID_F	SMC_LID_F - @m42a_lib.M42A	65A7
SMC_LRESET_L	SMC_LRESET_L - @m42a_lib.M42A	26B1 45C8
SMC_MANUAL_RST_L	SMC_MANUAL_RST_L - @m42a_lib.M42A	5B2 46D8
SMC_MD1	SMC_MD1 - @m42a_lib.M42A	5C2 45C2 47B6
SMC_MEM_ISENSE	SMC_MEM_ISENSE - @m42a_lib.M42A	45A8 46B3 61C1
SMC_NB_ISENSE	SMC_NB_ISENSE - @m42a_lib.M42A	45B8 46B3 62A5
SMC_NMI	SMC_NMI - @m42a_lib.M42A	5C2 45C1 47B5
SMC_ODD_DETECT	SMC_ODD_DETECT - @m42a_lib.M42A	34B3 45B8
SMC_ONOFF_L	SMC_ONOFF_L - @m42a_lib.M42A	40C8 45C5 46C8 46D6 48C8
	CONN_GEYSER_ONOFF_L - @m42a_lib.M42A	40C7
SMC_P20	SMC_P20 - @m42a_lib.M42A	45D8 46C6
SMC_P21	SMC_P21 - @m42a_lib.M42A	45D8 46C6
SMC_P22	SMC_P22 - @m42a_lib.M42A	45D8 46C6
SMC_P23	SMC_P23 - @m42a_lib.M42A	45D8 46C6
SMC_P26	SMC_P26 - @m42a_lib.M42A	45D8 46C6
SMC_P27	SMC_P27 - @m42a_lib.M42A	45D8 46C6
SMC_P44	SMC_P44 - @m42a_lib.M42A	45C8 46C6
SMC_P46	SMC_P46 - @m42a_lib.M42A	45C8 46C6
SMC_PB7	SMC_PB7 - @m42a_lib.M42A	45B8 46C6
SMC_PBUS_VSENSE	SMC_PBUS_VSENSE - @m42a_lib.M42A	45D5 48C5
SMC_PD3	SMC_PD3 - @m42a_lib.M42A	45B8 46C3
SMC_PG1	SMC_PG1 - @m42a_lib.M42A	45B5 46C6
SMC_PM_G2_EN	SMC_PM_G2_EN - @m42a_lib.M42A	45D5 63C8
SMC_PM_G2_EN_L	SMC_PM_G2_EN_L - @m42a_lib.M42A	63C7
SMC_PROCHOT	SMC_PROCHOT - @m42a_lib.M42A	45B5 46B6
SMC_PROCHOT_3_3_L	SMC_PROCHOT_3_3_L - @m42a_lib.M42A	45D5 46C1
SMC_PS_ON	SMC_PS_ON - @m42a_lib.M42A	5C1 39C6 45D5 46B3 65C3
SMC_RCIN_L	SMC_RCIN_L - @m42a_lib.M42A	21C3 45C8
SMC_RSTGATE_L	SMC_RSTGATE_L - @m42a_lib.M42A	26A3 45D8
SMC_RST_L	SMC_RST_L - @m42a_lib.M42A	5C2 45C3 46D7 47C5
SMC_RUNTIME_SCI_L	SMC_RUNTIME_SCI_L - @m42a_lib.M42A	23C8 45B8
SMC_RX_L	SMC_RX_L - @m42a_lib.M42A	5C2 45C8 46B2 46D6 47B5
SMC_SB_NMI	SMC_SB_NMI - @m42a_lib.M42A	23C3 45D8
SMC_SUS_CLK	SMC_SUS_CLK - @m42a_lib.M42A	45C5 46A6
SMC_SUS_CLK_R	SMC_SUS_CLK_R - @m42a_lib.M42A	46A7
SMC_SYS_ISET	SMC_SYS_ISET - @m42a_lib.M42A	45B5 66D7
SMC_SYS_KBDLED	SMC_SYS_KBDLED - @m42a_lib.M42A	45C8 46C6
SMC_SYS_LED_16B	SMC_SYS_LED_16B - @m42a_lib.M42A	45C8 46A4
SMC_SYS_VSET	SMC_SYS_VSET - @m42a_lib.M42A	45B5 46C3
SMC_TCK	SMC_TCK - @m42a_lib.M42A	5C2 45C5 46C6 47C5
SMC_TDI	SMC_TDI - @m42a_lib.M42A	5C2 45C5 46C6 47C5
SMC_TDO	SMC_TDO - @m42a_lib.M42A	5C2 45C5 46C6 47B6
SMC_THRMTRIP	SMC_THRMTRIP - @m42a_lib.M42A	45B5 46B5
SMC_TMS	SMC_TMS - @m42a_lib.M42A	5C2 45B5 46C6 47C6
SMC_TPM_GPIO	SMC_TPM_GPIO - @m42a_lib.M42A	45D5 46B2
SMC_TPM_PP	SMC_TPM_PP - @m42a_lib.M42A	45C8 53C7
SMC_TPM_PP_R	SMC_TPM_PP_R - @m42a_lib.M42A	53C6
SMC_TPM_RESET_L	SMC_TPM_RESET_L - @m42a_lib.M42A	45C8 46D6 53B7
SMC_TRST_L	SMC_TRST_L - @m42a_lib.M42A	5C2 45C1 47C6
SMC_TX_L	SMC_TX_L - @m42a_lib.M42A	5C2 45C8 46B2 46D6 47B6
SMC_VCL	SMC_VCL - @m42a_lib.M42A	45D3
SMC_WAKE_SCI_L	SMC_WAKE_SCI_L - @m42a_lib.M42A	23C1 45D5
SMC_XTAL	SMC_XTAL - @m42a_lib.M42A	45C4 46C7
SMLINK<0>	SMLINK<0> - @m42a_lib.M42A	23D5
SMLINK<1>	SMLINK<1> - @m42a_lib.M42A	23D5
SMS_ACC_SELFTEST	SMS_ACC_SELFTEST - @m42a_lib.M42A	52B6
SMS_INT_L	SMS_INT_L - @m42a_lib.M42A	23C3 45B5 46D6
SMS_ONOFF_L	SMS_ONOFF_L - @m42a_lib.M42A	45B5 52C7
SMS_X_AXIS	SMS_X_AXIS - @m42a_lib.M42A	45B8 52C2
SMS_Y_AXIS	SMS_Y_AXIS - @m42a_lib.M42A	45B8 52C2

SMS_Z_AXIS	SMS_Z_AXIS - @m42a_lib.M42A	45B8 52C2
SPI_ARB	SPI_ARB - @m42a_lib.M42A	22C6 45D5
SPI_CE_L	SPI_CE_L - @m42a_lib.M42A	22C6 45B5 50C7
SPI_HOLD_L	SPI_HOLD_L - @m42a_lib.M42A	50C4
SPI_SCLK	SPI_SCLK - @m42a_lib.M42A	22C6 45D5 50C7
SPI_SCLK_R	SPI_SCLK_R - @m42a_lib.M42A	50C4
SPI_SI	SPI_SI - @m42a_lib.M42A	22C6 45D5 50C1
SPI_SI_R	SPI_SI_R - @m42a_lib.M42A	50C3
SPI_SO	SPI_SO - @m42a_lib.M42A	22C6 45D5 50C1
SPI_SO_R	SPI_SO_R - @m42a_lib.M42A	50C3
SPI_WP_L	SPI_WP_L - @m42a_lib.M42A	50C4
SPKRAMP_L_N_OUT	SPKRAMP_L_N_OUT - @m42a_lib.M42A	55B4 55C3
SPKRAMP_L_P_OUT	SPKRAMP_L_P_OUT - @m42a_lib.M42A	55B4 55C3
SPKRAMP_R_N_OUT	SPKRAMP_R_N_OUT - @m42a_lib.M42A	55C3 55C4
SPKRAMP_R_P_OUT	SPKRAMP_R_P_OUT - @m42a_lib.M42A	55C4 55D3
SPKRAMP_SUB_N_OUT	SPKRAMP_SUB_N_OUT - @m42a_lib.M42A	55A4 55B3
SPKRAMP_SUB_P_OUT	SPKRAMP_SUB_P_OUT - @m42a_lib.M42A	55A4 55B3
SPKRAMP_SYNC1	SPKRAMP_SYNC1 - @m42a_lib.M42A	55A4 55C4
SPKRAMP_SYNC2	SPKRAMP_SYNC2 - @m42a_lib.M42A	55A4 55B4
SPKRAMP_THERMPLANE	SPKRAMP_THERMPLANE - @m42a_lib.M42A	55A4 55A4 55B4 55C4
SPKRCONN_L_N_OUT	SPKRCONN_L_N_OUT - @m42a_lib.M42A	55C1 56D2
SPKRCONN_L_P_OUT	SPKRCONN_L_P_OUT - @m42a_lib.M42A	55C1 56D2
SPKRCONN_R_N_OUT	SPKRCONN_R_N_OUT - @m42a_lib.M42A	55C1 56C2
SPKRCONN_R_P_OUT	SPKRCONN_R_P_OUT - @m42a_lib.M42A	55D1 56C2
SPKRCONN_SUB_N_OUT	SPKRCONN_SUB_N_OUT - @m42a_lib.M42A	55B1 56C2
SPKRCONN_SUB_P_OUT	SPKRCONN_SUB_P_OUT - @m42a_lib.M42A	55B1 56C2
SPKR_SHIELD	SPKR_SHIELD - @m42a_lib.M42A	56C2
ST_ACCEL_ON_L	ST_ACCEL_ON_L - @m42a_lib.M42A	52B6
SUS_CLK_SB	SUS_CLK_SB - @m42a_lib.M42A	6B4 23C3
	SUS_CLK_SB_SPN - @m42a_lib.M42A	6B3
SV_SET_UP	SV_SET_UP - @m42a_lib.M42A	5C2 23B6 23C3 47B5
SYS_LED_ANODE	SYS_LED_ANODE - @m42a_lib.M42A	5B2 35C5 46A3
SYS_LED_ANODE_L	SYS_LED_ANODE_L - @m42a_lib.M42A	35C7
SYS_LED_ILIM	SYS_LED_ILIM - @m42a_lib.M42A	46A3
SYS_LED_L	SYS_LED_L - @m42a_lib.M42A	46A3
SYS_LED_L_VDIV	SYS_LED_L_VDIV - @m42a_lib.M42A	46A3
SYS_ONEWIRE	SYS_ONEWIRE - @m42a_lib.M42A	5C1 45B8 46D6 65C8
THRM_ALERT	THRM_ALERT - @m42a_lib.M42A	10B4
THRM_ALERT_L	THRM_ALERT_L - @m42a_lib.M42A	10C4
THRM_CPU_DX_N	THRM_CPU_DX_N - @m42a_lib.M42A	10B5
THRM_CPU_DX_P	THRM_CPU_DX_P - @m42a_lib.M42A	10B5
THRM_DIMM0_3V3_UNFILTERED	THRM_DIMM0_3V3_UNFILTERED - @m42a_lib.M42A	49D4
THRM_DIMM0_DXN	THRM_DIMM0_DXN - @m42a_lib.M42A	40C5 49C6
THRM_DIMM0_DXP1	THRM_DIMM0_DXP1 - @m42a_lib.M42A	40C4 49D6
THRM_DIMM0_DXP2	THRM_DIMM0_DXP2 - @m42a_lib.M42A	49C6
THRM_DIMM1_3V3_UNFILTERED	THRM_DIMM1_3V3_UNFILTERED - @m42a_lib.M42A	49B4
THRM_DIMM1_DXN	THRM_DIMM1_DXN - @m42a_lib.M42A	49B5
THRM_DIMM1_DXP1	THRM_DIMM1_DXP1 - @m42a_lib.M42A	49B5
THRM_DIMM1_DXP2	THRM_DIMM1_DXP2 - @m42a_lib.M42A	49A5
TMDS_EXT_RES	TMDS_EXT_RES - @m42a_lib.M42A	68B4
TMDS_EXT_SWING	TMDS_EXT_SWING - @m42a_lib.M42A	68B3
TMDS_HTPLG	TMDS_HTPLG - @m42a_lib.M42A	68A7 69C6
TMDS_HTPLG_R	TMDS_HTPLG_R - @m42a_lib.M42A	68A7
TMDS_I2C_SCL	TMDS_I2C_SCL - @m42a_lib.M42A	68B2
TMDS_I2C_SDA	TMDS_I2C_SDA - @m42a_lib.M42A	68B2
TMDS_INT_N	TMDS_INT_N - @m42a_lib.M42A	68B5
TMDS_INT_P	TMDS_INT_P - @m42a_lib.M42A	68B5
TMDS_RST_L	TMDS_RST_L - @m42a_lib.M42A	26B1 68B5
TMDS_SDB_N	TMDS_SDB_N - @m42a_lib.M42A	68B4
TMDS_SDB_P	TMDS_SDB_P - @m42a_lib.M42A	68B4
TMDS_SDC_N	TMDS_SDC_N - @m42a_lib.M42A	68B4
TMDS_SDC_P	TMDS_SDC_P - @m42a_lib.M42A	68B4
TMDS_SDG_N	TMDS_SDG_N - @m42a_lib.M42A	68B4
TMDS_SDG_P	TMDS_SDG_P - @m42a_lib.M42A	68B4
TMDS_SDR_N	TMDS_SDR_N - @m42a_lib.M42A	68B4
TMDS_SDR_P	TMDS_SDR_P - @m42a_lib.M42A	68B4
TMDS_TX<0>	TMDS_TX<0> - @m42a_lib.M42A	68D2
TMDS_TX<1>	TMDS_TX<1> - @m42a_lib.M42A	68D2
TMDS_TX<2>	TMDS_TX<2> - @m42a_lib.M42A	68C2
TMDS_TX_CLK	TMDS_TX_CLK - @m42a_lib.M42A	68C2
TMDS_TX_CLK_N	TMDS_TX_CLK_N - @m42a_lib.M42A	68B2 68C1 69A2
TMDS_TX_CLK_P	TMDS_TX_CLK_P - @m42a_lib.M42A	68B2 68C3 69A2
TMDS_TX_CONN_CLK_N	TMDS_TX_CONN_CLK_N - @m42a_lib.M42A	69B3
TMDS_TX_CONN_CLK_P	TMDS_TX_CONN_CLK_P - @m42a_lib.M42A	69B3
TMDS_TX_CONN_N<0>	TMDS_TX_CONN_N<0> - @m42a_lib.M42A	69B3
TMDS_TX_CONN_N<1>	TMDS_TX_CONN_N<1> - @m42a_lib.M42A	69B3
TMDS_TX_CONN_N<2>	TMDS_TX_CONN_N<2> - @m42a_lib.M42A	69B3
TMDS_TX_CONN_P<0>	TMDS_TX_CONN_P<0> - @m42a_lib.M42A	69B3
TMDS_TX_CONN_P<1>	TMDS_TX_CONN_P<1> - @m42a_lib.M42A	69B3
TMDS_TX_CONN_P<2>	TMDS_TX_CONN_P<2> - @m42a_lib.M42A	69B3
TMDS_TX_N<0>	TMDS_TX_N<0> - @m42a_lib.M42A	68B2 68D1 69B2
TMDS_TX_N<1>	TMDS_TX_N<1> - @m42a_lib.M42A	68B2 68D1 69B2
TMDS_TX_N<2>	TMDS_TX_N<2> - @m42a_lib.M42A	68B2 68C1 69B2
TMDS_TX_P<0>	TMDS_TX_P<0> - @m42a_lib.M42A	68B2 68D3 69B2
TMDS_TX_P<1>	TMDS_TX_P<1> - @m42a_lib.M42A	68B2 68D3 69B2
TMDS_TX_P<2>	TMDS_TX_P<2> - @m42a_lib.M42A	68B2 68C3 69B2
TPM_BADD	TPM_BADD - @m42a_lib.M42A	53C3
TPM_GPIO1	TPM_GPIO1 - @m42a_lib.M42A	46B1 53C6
TPM_GPIO2	TPM_GPIO2 - @m42a_lib.M42A	46B1 53C6
TPM_LRESET_L	TPM_LRESET_L - @m42a_lib.M42A	26B1 53B7
TPM_RST_L	TPM_RST_L - @m42a_lib.M42A	53B6
TPM_XTALI	TPM_XTALI - @m42a_lib.M42A	53C6
TPM_XTALO	TPM_XTALO - @m42a_lib.M42A	53C6
TPS73115_NR	TPS73115_NR - @m42a_lib.M42A	19D5
TP_AZ_DOCK_EN_L	TP_AZ_DOCK_EN_L - @m42a_lib.M42A	23C5
TP_AZ_DOCK_RST_L	TP_AZ_DOCK_RST_L - @m42a_lib.M42A	23C5
TP_CPU_A32_L	TP_CPU_A32_L - @m42a_lib.M42A	7C8
TP_CPU_A33_L	TP_CPU_A33_L - @m42a_lib.M42A	7B8
TP_CPU_A34_L	TP_CPU_A34_L - @m42a_lib.M42A	7B8
TP_CPU_A35_L	TP_CPU_A35_L - @m42a_lib.M42A	7B8
TP_CPU_A36_L	TP_CPU_A36_L - @m42a_lib.M42A	7B8
TP_CPU_A37_L	TP_CPU_A37_L - @m42a_lib.M42A	7B8
TP_CPU_A38_L	TP_CPU_A38_L - @m42a_lib.M42A	7B8
TP_CPU_A39_L	TP_CPU_A39_L - @m42a_lib.M42A	7B8
TP_CPU_APM0_L	TP_CPU_APM0_L - @m42a_lib.M42A	7B8
TP_CPU_APM1_L	TP_CPU_APM1_L - @m42a_lib.M42A	7B8
TP_CPU_CPUSLP_L	TP_CPU_CPUSLP_L - @m42a_lib.M42A	21C4
TP_CPU_EXTBREF	TP_CPU_EXTBREF - @m42a_lib.M42A	7B6
TP_CPU_HFPLL	TP_CPU_HFPLL - @m42a_lib.M42A	7B8
TP_CPU_SPARE0	TP_CPU_SPARE0 - @m42a_lib.M42A	7B6
TP_CPU_SPARE1	TP_CPU_SPARE1 - @m42a_lib.M42A	7B6
TP_CPU_SPARE2	TP_CPU_SPARE2 - @m42a_lib.M42A	7B6
TP_CPU_SPARE3	TP_CPU_SPARE3 - @m42a_lib.M42A	7B6
TP_CPU_SPARE4	TP_CPU_SPARE4 - @m42a_lib.M42A	7B6
TP_CPU_SPARE5	TP_CPU_SPARE5 - @m42a_lib.M42A	7B6
TP_CPU_SPARE6	TP_CPU_SPARE6 - @m42a_lib.M42A	7B6
TP_CPU_SPARE7	TP_CPU_SPARE7 - @m42a_lib.M42A	7B6
TP_LVDS_VBG	TP_LVDS_VBG - @m42a_lib.M42A	13D5
TP_NB_TESTIN_L	TP_NB_TESTIN_L - @m42a_lib.M42A	14D6
TP_NB_XOR_FSB2_H7	TP_NB_XOR_FSB2_H7 - @m42a_lib.M42A	14D6
TP_NB_XOR_LVDS_A34	TP_NB_XOR_LVDS_A34 - @m42a_lib.M42A	14C6
TP_NB_XOR_LVDS_A35	TP_NB_XOR_LVDS_A35 - @m42a_lib.M42A	14C6

www.laptopblue.vn

TP_NB_XOR_LVDS_D27	TP_NB_XOR_LVDS_D27 - @m42a_lib.M42A	14C6
TP_NB_XOR_LVDS_D28	TP_NB_XOR_LVDS_D28 - @m42a_lib.M42A	14C6
TP_PCI_GNT0_L	TP_PCI_GNT0_L - @m42a_lib.M42A	22B6
TP_PCI_GNT1_L	TP_PCI_GNT1_L - @m42a_lib.M42A	22B6
TP_PCI_GNT2_L	TP_PCI_GNT2_L - @m42a_lib.M42A	22B6
TP_PCI_PME_L	TP_PCI_PME_L - @m42a_lib.M42A	22A6
TP_SB_ACZ_SDIN1	TP_SB_ACZ_SDIN1 - @m42a_lib.M42A	21C6
TP_SB_ACZ_SDIN2	TP_SB_ACZ_SDIN2 - @m42a_lib.M42A	21C6
TP_SB_DRQ0_L	TP_SB_DRQ0_L - @m42a_lib.M42A	21D4
TP_SB_GPIO6	TP_SB_GPIO6 - @m42a_lib.M42A	23C5
TP_SB_GPIO22	TP_SB_GPIO22 - @m42a_lib.M42A	6B1 22B6
	=SB_GPIO22 - @m42a_lib.M42A	6B2 69A6
	SB_GPIO22 - @m42a_lib.M42A	6B2
	=SB_GPIO22 - @m42a_lib.M42A	6B2 69A6
TP_SB_GPIO23	TP_SB_GPIO23 - @m42a_lib.M42A	21D5
TP_SB_GPIO25_DO_NOT_	TP_SB_GPIO25_DO_NOT_USE -	23C3
USE	@m42a_lib.M42A	
TP_SB_GPIO38	TP_SB_GPIO38 - @m42a_lib.M42A	23C3
TP_SB_RCVENIN_L	TP_SB_RCVENIN_L - @m42a_lib.M42A	15B2
TP_SB_RSVD9	TP_SB_RSVD9 - @m42a_lib.M42A	22A6
TP_SB_SATALED_L	TP_SB_SATALED_L - @m42a_lib.M42A	21C6
TP_SB_XOR-AD5	TP_SB_XOR-AD5 - @m42a_lib.M42A	22A7
TP_SB_XOR-AD9	TP_SB_XOR-AD9 - @m42a_lib.M42A	22A7
TP_SB_XOR-AE5	TP_SB_XOR-AE5 - @m42a_lib.M42A	22A7
TP_SB_XOR-AG4	TP_SB_XOR-AG4 - @m42a_lib.M42A	22A7
TP_SB_XOR-AH4	TP_SB_XOR-AH4 - @m42a_lib.M42A	22A7
TP_SB_XOR-U3	TP_SB_XOR-U3 - @m42a_lib.M42A	21C6
TP_SB_XOR-U7	TP_SB_XOR-U7 - @m42a_lib.M42A	21C6
TP_SB_XOR-V6	TP_SB_XOR-V6 - @m42a_lib.M42A	21C6
TP_SB_XOR-V7	TP_SB_XOR-V7 - @m42a_lib.M42A	21C6
TP_SB_XOR-Y1	TP_SB_XOR-Y1 - @m42a_lib.M42A	21C6
TP_SB_XOR-Y2	TP_SB_XOR-Y2 - @m42a_lib.M42A	21C6
TP_SB_XOR_AE9	TP_SB_XOR_AE9 - @m42a_lib.M42A	22A6
TP_SB_XOR_AG8	TP_SB_XOR_AG8 - @m42a_lib.M42A	22A6
TP_SB_XOR_AH8	TP_SB_XOR_AH8 - @m42a_lib.M42A	22A6
TP_SB_XOR_W1	TP_SB_XOR_W1 - @m42a_lib.M42A	21C6
TP_USBN_F	TP_USBN_F - @m42a_lib.M42A	5C1
TP_USBP_F	TP_USBP_F - @m42a_lib.M42A	5C1
TV_DACA_OUT	TV_DACA_OUT - @m42a_lib.M42A	13C5 69B8
TV_DACB_OUT	TV_DACB_OUT - @m42a_lib.M42A	13C5 69A8
TV_DACC_OUT	TV_DACC_OUT - @m42a_lib.M42A	13C5 69A8
TV_IREF	TV_IREF - @m42a_lib.M42A	13C5 69C8
USB2_BT_F_N	USB2_BT_F_N - @m42a_lib.M42A	44C4
USB2_BT_F_P	USB2_BT_F_P - @m42a_lib.M42A	44B4
USB2_CAMERA_CONN_N	USB2_CAMERA_CONN_N - @m42a_lib.M42A	67A2
USB2_CAMERA_CONN_P	USB2_CAMERA_CONN_P - @m42a_lib.M42A	67B2
USB2_EXTA_F_N	USB2_EXTA_F_N - @m42a_lib.M42A	42C2
USB2_EXTA_F_P	USB2_EXTA_F_P - @m42a_lib.M42A	42C2
USB2_EXTB_F_N	USB2_EXTB_F_N - @m42a_lib.M42A	42B2
USB2_EXTB_F_P	USB2_EXTB_F_P - @m42a_lib.M42A	42B2
USB2_GND_EXTA_F	USB2_GND_EXTA_F - @m42a_lib.M42A	42C2
USB2_GND_EXTB_F	USB2_GND_EXTB_F - @m42a_lib.M42A	42B2
USB_A_N	USB_A_N - @m42a_lib.M42A	6C1 22C2
	=USB2_EXTA_N - @m42a_lib.M42A	6C2 42C5
	USB2_EXTA_N - @m42a_lib.M42A	6C2
	=USB2_EXTA_N - @m42a_lib.M42A	6C2 42C5
USB_A_OC_L	USB_A_OC_L - @m42a_lib.M42A	6C1 22C4 22D8
	=EXTAUSB_OC_L - @m42a_lib.M42A	6C2 42C8
	EXTAUSB_OC_L - @m42a_lib.M42A	6C2
	=EXTAUSB_OC_L - @m42a_lib.M42A	6C2 42C8
USB_A_P	USB_A_P - @m42a_lib.M42A	6C1 22C2
	=USB2_EXTA_P - @m42a_lib.M42A	6C2 42C5
	USB2_EXTA_P - @m42a_lib.M42A	6C2
	=USB2_EXTA_P - @m42a_lib.M42A	6C2 42C5
USB_B_N	USB_B_N - @m42a_lib.M42A	6C1 22C2
	=USB2_GEYSER_N - @m42a_lib.M42A	6C2 40C7
	USB2_GEYSER_N - @m42a_lib.M42A	6C2
	=USB2_GEYSER_N - @m42a_lib.M42A	6C2 40C7
USB_B_OC_L	USB_B_OC_L - @m42a_lib.M42A	22C4 22D8
USB_B_P	USB_B_P - @m42a_lib.M42A	6C1 22C2
	=USB2_GEYSER_P - @m42a_lib.M42A	6C2 40C7
	USB2_GEYSER_P - @m42a_lib.M42A	6C2
	=USB2_GEYSER_P - @m42a_lib.M42A	6C2 40C7
USB_C_N	USB_C_N - @m42a_lib.M42A	6C1 22C2
	=USB2_EXTB_N - @m42a_lib.M42A	6C2 42B5
	USB2_EXTB_N - @m42a_lib.M42A	6C2
	=USB2_EXTB_N - @m42a_lib.M42A	6C2 42B5
USB_C_P	USB_C_P - @m42a_lib.M42A	6C1 22C2
	=USB2_EXTB_P - @m42a_lib.M42A	6C2 42B5
	USB2_EXTB_P - @m42a_lib.M42A	6C2
	=USB2_EXTB_P - @m42a_lib.M42A	6C2 42B5
USB_D_OC_L	USB_D_OC_L - @m42a_lib.M42A	22C4 22D8
USB_E_N	USB_E_N - @m42a_lib.M42A	6C1 22C2
	TP_USBN_E - @m42a_lib.M42A	5C1 6C2
USB_E_OC_L	USB_E_OC_L - @m42a_lib.M42A	22C4 22D8
USB_E_P	USB_E_P - @m42a_lib.M42A	6C1 22C2
	TP_USBP_E - @m42a_lib.M42A	5C1 6C2
USB_F_N	USB_F_N - @m42a_lib.M42A	6C1 22C2
	=USB2_IR_N - @m42a_lib.M42A	6C2 41C6
	USB_IR_N - @m42a_lib.M42A	6C2
	=USB2_IR_N - @m42a_lib.M42A	6C2 41C6
USB_F_P	USB_F_P - @m42a_lib.M42A	6C1 22C2
	=USB2_IR_P - @m42a_lib.M42A	6C2 41C6
	USB_IR_P - @m42a_lib.M42A	6C2
	=USB2_IR_P - @m42a_lib.M42A	6C2 41C6
USB_G_N	USB_G_N - @m42a_lib.M42A	6B1 22C2
	=USB2_BT_N - @m42a_lib.M42A	6B2 44C6
	USB_BT_N - @m42a_lib.M42A	6B2
	=USB2_BT_N - @m42a_lib.M42A	6B2 44C6
USB_G_P	USB_G_P - @m42a_lib.M42A	6B1 22C2
	=USB2_BT_P - @m42a_lib.M42A	6C2 44C6
	USB_BT_P - @m42a_lib.M42A	6C2
	=USB2_BT_P - @m42a_lib.M42A	6C2 44C6
USB_RBIAS_PN	USB_RBIAS_PN - @m42a_lib.M42A	22C2
VGA_B	VGA_B - @m42a_lib.M42A	69B4
VGA_G	VGA_G - @m42a_lib.M42A	69B4
VGA_HSYNC	VGA_HSYNC - @m42a_lib.M42A	69B4 69C1
VGA_R	VGA_R - @m42a_lib.M42A	69A4
VGA_VSYNC	VGA_VSYNC - @m42a_lib.M42A	69B4 69C1
VOL_DOWN	VOL_DOWN - @m42a_lib.M42A	54B7 54C7
VOL_UP	VOL_UP - @m42a_lib.M42A	54B7 54C7
VREG_FB	VREG_FB - @m42a_lib.M42A	54A4
VR_PWRGD_CK410	VR_PWRGD_CK410 - @m42a_lib.M42A	23C5 26A8
VR_PWRGOOD_DELAY	VR_PWRGOOD_DELAY - @m42a_lib.M42A	14B6 26B5 58C7
XDP_BPM_L<0>	XDP_BPM_L<0> - @m42a_lib.M42A	7C6 11B2
XDP_BPM_L<1>	XDP_BPM_L<1> - @m42a_lib.M42A	7C6 11B2
XDP_BPM_L<2>	XDP_BPM_L<2> - @m42a_lib.M42A	7C6 11B2
XDP_BPM_L<3>	XDP_BPM_L<3> - @m42a_lib.M42A	7C6 11B3
XDP_BPM_L<4>	XDP_BPM_L<4> - @m42a_lib.M42A	7C6 11B2
XDP_BPM_L<5>	XDP_BPM_L<5> - @m42a_lib.M42A	7C6 11B2
XDP_DBRESET_L	XDP_DBRESET_L - @m42a_lib.M42A	7C6 11B4 26C6
XDP_TCK	XDP_TCK - @m42a_lib.M42A	7A8 7C6 11B2 11B3
XDP_TDI	XDP_TDI - @m42a_lib.M42A	7B8 7C6 11B3
XDP_TDO	XDP_TDO - @m42a_lib.M42A	7C6 11B5

XDP_TMS	XDP_TMS - @m42a_lib.M42A	7B8 7C6 11B2
XDP_TRST_L	XDP_TRST_L - @m42a_lib.M42A	7C6 11B3

Preliminary

www.laptopblue.vn

Title: Cref Part Report
Design: m42a
Date: Aug 5 16:01:17 2006

C0607	CAP_402	m42a[6C7]
C0608	CAP_402	m42a[6C7]
C0610	CAP_402	m42a[6C7]
C0611	CAP_402	m42a[6C7]
C0612	CAP_402	m42a[6A8]
C0613	CAP_402	m42a[6A8]
C0614	CAP_402	m42a[6B7]
C0615	CAP_402	m42a[6B7]
C0616	CAP_402	m42a[6B7]
C0617	CAP_402	m42a[6B7]
C0618	CAP_402	m42a[6A8]
C0619	CAP_402	m42a[6A7]
C0630	CAP_402	m42a[6C7]
C0900	CAP_805	m42a[9B5]
C0901	CAP_805	m42a[9B6]
C0902	CAP_805	m42a[9A5]
C0904	CAP_805	m42a[9A6]
C0907	CAP_805	m42a[9B4]
C0908	CAP_805	m42a[9B6]
C0909	CAP_805	m42a[9B5]
C0910	CAP_805	m42a[9B7]
C0911	CAP_805	m42a[9B7]
C0912	CAP_805	m42a[9A6]
C0913	CAP_805	m42a[9A7]
C0918	CAP_805	m42a[9A7]
C0920	CAP_805	m42a[9A4]
C0923	CAP_805	m42a[9B7]
C0924	CAP_805	m42a[9A7]
C0926	CAP_402	m42a[9B7]
C0928	CAP_805	m42a[9B5]
C0929	CAP_805	m42a[9B4]
C0930	CAP_805	m42a[9A5]
C0931	CAP_805	m42a[9A5]
C0934	CAP_402	m42a[9B7]
C0935	CAP_402	m42a[9B7]
C0936	CAP_402	m42a[9B6]
C0937	CAP_402	m42a[9B6]
C0938	CAP_402	m42a[9B5]
C0939	CAP_805	m42a[9A4]
C0940	CAP_P_3P_D2T	m42a[9B5]
C0941	CAP_P_3P_D2T	m42a[9A7]
C0942	CAP_P_3P_D2T	m42a[9A7]
C0943	CAP_P_3P_D2T	m42a[9A6]
C0944	CAP_P_3P_D2T	m42a[9A6]
C0946	CAP_P_3P_D2T	m42a[9A5]
C0950	CAP_402	m42a[9D7]
C0951	CAP_603	m42a[9D7]
C1001	CAP_402	m42a[10B5]
C1002	CAP_402	m42a[10C4]
C1100	CAP_402	m42a[11B3]
C1211	CAP_402	m42a[12C3]
C1226	CAP_402	m42a[12B6]
C1236	CAP_402	m42a[12A6]
C1415	CAP_402	m42a[14C3]
C1416	CAP_402	m42a[14C2]
C1610	CAP_402	m42a[16B5]
C1611	CAP_402	m42a[16B4]
C1612	CAP_402	m42a[16B4]
C1613	CAP_402	m42a[16B8]
C1614	CAP_402	m42a[16B8]
C1615	CAP_402	m42a[16B6]
C1620	CAP_603	m42a[16B5]
C1621	CAP_603	m42a[16B5]
C1711	CAP_402	m42a[17A3]
C1712	CAP_402	m42a[17A3]
C1713	CAP_402	m42a[17B3]
C1900	CAP_P_3P_D2T	m42a[19B8]
C1902	CAP_603	m42a[19B7]
C1903	CAP_603	m42a[19B7]
C1904	CAP_402	m42a[19B6]
C1905	CAP_402	m42a[19B6]
C1906	CAP_402	m42a[19B6]
C1907	CAP_402	m42a[19B5]
C1910	CAP_603	m42a[19B8]
C1911	CAP_402	m42a[19B7]
C1912	CAP_603	m42a[19B8]
C1913	CAP_402	m42a[19B7]
C1914	CAP_603	m42a[19B6]
C1915	CAP_402	m42a[19B6]
C1916	CAP_402	m42a[19B6]
C1917	CAP_402	m42a[19B5]
C1918	CAP_402	m42a[19B5]
C1920	CAP_402	m42a[19A6]
C1921	FILTER_3P_A_NFM18	m42a[19A6]
C1922	CAP_402	m42a[19A6]
C1923	FILTER_3P_A_NFM18	m42a[19A6]
C1934	CAP_805	m42a[19C5]
C1935	CAP_402	m42a[19C5]
C1936	CAP_805	m42a[19C5]
C1937	CAP_402	m42a[19C5]
C1940	CAP_402	m42a[19C4]
C1941	CAP_402	m42a[19C3]
C1942	CAP_402	m42a[19C3]
C1950	CAP_402	m42a[19D6]
C1951	CAP_402	m42a[19D5]
C1952	CAP_603	m42a[19D5]
C1953	CAP_402	m42a[19D4]
C1954	CAP_402	m42a[19C4]
C1965	CAP_603	m42a[19B4]
C1966	CAP_603	m42a[19B4]
C1967	CAP_402	m42a[19B4]
C1970	CAP_P_SMB2	m42a[19A4]
C1971	CAP_603	m42a[19A3]
C1972	CAP_603	m42a[19A3]
C1975	CAP_603	m42a[19A3]
C1976	CAP_402	m42a[19A3]
C1980	CAP_402	m42a[19D2]
C1981	CAP_402	m42a[19D2]
C1985	CAP_402	m42a[19C2]
C1986	FILTER_3P_A_NFM18	m42a[19D2]
C1990	CAP_603	m42a[19C2]
C1991	CAP_402	m42a[19C2]
C1992	FILTER_3P_A_NFM18	m42a[19C2]
C1993	CAP_402	m42a[19B2]
C1994	FILTER_3P_A_NFM18	m42a[19B2]
C1995	CAP_402	m42a[19B2]
C1996	FILTER_3P_A_NFM18	m42a[19B2]
C1997	CAP_402	m42a[19A2]
C1998	FILTER_3P_A_NFM18	m42a[19A2]

C2500	CAP_P_SMB2	m42a[25B8]
C2501	CAP_402	m42a[25A6]
C2502	CAP_402	m42a[25D4]
C2503	CAP_402	m42a[25D8]
C2504	CAP_402	m42a[25C8]
C2505	CAP_402	m42a[25B7]
C2506	CAP_402	m42a[25B7]
C2507	CAP_402	m42a[25B7]
C2508	CAP_603	m42a[25A6]
C2509	CAP_402	m42a[25B8]
C2510	CAP_402	m42a[25C1]
C2511	CAP_402	m42a[25D6]
C2512	CAP_402	m42a[25B1]
C2513	CAP_402	m42a[25C6]
C2514	CAP_402	m42a[25C6]
C2515	CAP_402	m42a[25B6]
C2516	CAP_P_CASE-C2	m42a[25D3]
C2517	CAP_402	m42a[25D6]
C2518	CAP_402	m42a[25D4]
C2519	CAP_402	m42a[25D3]
C2520	CAP_402	m42a[25B6]
C2521	CAP_402	m42a[25C3]
C2522	CAP_402	m42a[25B3]
C2523	CAP_402	m42a[25B4]
C2524	CAP_603	m42a[25B3]
C2525	CAP_402	m42a[25B3]
C2526	CAP_402	m42a[25A4]
C2527	CAP_402	m42a[25A3]
C2528	CAP_402	m42a[25A3]
C2529	CAP_402	m42a[25A3]
C2530	CAP_402	m42a[25A3]
C2531	CAP_402	m42a[25D1]
C2532	CAP_402	m42a[25C1]
C2533	CAP_402	m42a[25C1]
C2534	CAP_402	m42a[25D1]
C2605	CAP_402	m42a[26D4]
C2607	CAP_402	m42a[26B5]
C2608	CAP_402	m42a[26C7]
C2609	CAP_402	m42a[26C7]
C2610	CAP_402	m42a[26D4]
C2611	CAP_402	m42a[26B8]
C2680	CAP_402	m42a[26B3]
C2800	CAP_402	m42a[28D7]
C2809	CAP_603	m42a[28B2]
C2810	CAP_402	m42a[28B2]
C2811	CAP_402	m42a[28B2]
C2812	CAP_402	m42a[28B1]
C2813	CAP_402	m42a[28B1]
C2814	CAP_402	m42a[28B2]
C2815	CAP_402	m42a[28B2]
C2816	CAP_402	m42a[28B1]
C2817	CAP_402	m42a[28B1]
C2820	CAP_402	m42a[28D7]
C2821	CAP_402	m42a[28A7]
C2822	CAP_402	m42a[28A7]
C2830	CAP_402	m42a[28B2]
C2831	CAP_402	m42a[28B2]
C2832	CAP_402	m42a[28B1]
C2900	CAP_402	m42a[29D7]
C2909	CAP_603	m42a[29B2]
C2910	CAP_402	m42a[29B2]
C2911	CAP_402	m42a[29B2]
C2912	CAP_402	m42a[29B1]
C2913	CAP_402	m42a[29B1]
C2914	CAP_402	m42a[29B2]
C2915	CAP_402	m42a[29B2]
C2916	CAP_402	m42a[29B1]
C2917	CAP_402	m42a[29B1]
C2920	CAP_402	m42a[29D7]
C2921	CAP_402	m42a[29A7]
C2922	CAP_402	m42a[29A7]
C2930	CAP_402	m42a[29B2]
C2931	CAP_402	m42a[29B2]
C2932	CAP_402	m42a[29B1]
C3000	CAP_402	m42a[30D4]
C3001	CAP_402	m42a[30D3]
C3002	CAP_402	m42a[30D4]
C3003	CAP_402	m42a[30D3]
C3004	CAP_402	m42a[30D4]
C3005	CAP_402	m42a[30D3]
C3006	CAP_402	m42a[30C4]
C3007	CAP_402	m42a[30C3]
C3008	CAP_402	m42a[30C4]
C3009	CAP_402	m42a[30C3]
C3010	CAP_402	m42a[30C4]
C3011	CAP_402	m42a[30C3]
C3012	CAP_402	m42a[30B4]
C3013	CAP_402	m42a[30B3]
C3014	CAP_402	m42a[30B4]
C3015	CAP_402	m42a[30B3]
C3016	CAP_402	m42a[30B4]
C3017	CAP_402	m42a[30B3]
C3018	CAP_402	m42a[30B4]
C3019	CAP_402	m42a[30B3]
C3020	CAP_402	m42a[30A4]
C3021	CAP_402	m42a[30A3]
C3022	CAP_402	m42a[30A4]
C3023	CAP_402	m42a[30A3]
C3024	CAP_402	m42a[30A4]
C3025	CAP_402	m42a[30A3]
C3100	CAP_402	m42a[31C4]
C3101	CAP_603	m42a[31B5]
C3102	CAP_603	m42a[31B3]
C3103	CAP_402	m42a[31B5]
C3104	CAP_603	m42a[31C4]
C3105	CAP_P_SMC-LF	m42a[31B4]
C3301	CAP_402	m42a[32D6]
C3302	CAP_402	m42a[32D6]
C3303	CAP_402	m42a[32D6]
C3304	CAP_402	m42a[32D6]
C3305	CAP_402	m42a[32D4]
C3306	CAP_402	m42a[32D4]
C3307	CAP_402	m42a[32C4]
C3308	CAP_402	m42a[32D4]
C3309	CAP_603	m42a[32D4]
C3310	CAP_402	m42a[32D3]
C3311	CAP_402	m42a[32C6]
C3312	CAP_603	m42a[32C6]
C3314	CAP_402	m42a[32D8]
C3315	CAP_402	m42a[32D7]
C3316	CAP_603	m42a[32D7]
C3317	CAP_603	m42a[32D4]
C3389	CAP_402	m42a[32C7]
C3390	CAP_402	m42a[32C7]

C3804	CAP_402	m42a[34B5]
C3805	CAP_402	m42a[34B3]
C3806	CAP_603	m42a[34B3]
C3875	CAP_402	m42a[34C7]
C3876	CAP_402	m42a[34C5]
C3900	CAP_402	m42a[35D6]
C3901	CAP_402	m42a[35D5]
C3902	CAP_402	m42a[35C6]
C3903	CAP_402	m42a[35D5]
C3920	CAP_402	m42a[35C7]
C3921	CAP_603	m42a[35C6]
C3922	CAP_402	m42a[35C5]
C3923	CAP_402	m42a[35C6]
C3950	CAP_603	m42a[35B8]
C4100	CAP_402	m42a[36D6]
C4101	CAP_402	m42a[36D6]
C4102	CAP_402	m42a[36D5]
C4103	CAP_402	m42a[36D5]
C4104	CAP_402	m42a[36D5]
C4105	CAP_402	m42a[36D5]
C4106	CAP_402	m42a[36D4]
C4107	CAP_402	m42a[36D4]
C4110	CAP_402	m42a[36D5]
C4111	CAP_402	m42a[36D5]
C4112	CAP_402	m42a[36C5]
C4113	CAP_402	m42a[36C5]
C4115	CAP_402	m42a[36B4]
C4116	CAP_402	m42a[36B4]
C4117	CAP_402	m42a[36B3]
C4118	CAP_402	m42a[36B3]
C4126	CAP_402	m42a[36A8]
C4127	CAP_402	m42a[36A8]
C4128	CAP_402	m42a[36A7]
C4129	CAP_402	m42a[36A7]
C4130	CAP_402	m42a[36A7]
C4131	CAP_402	m42a[36A6]
C4132	CAP_402	m42a[36A6]
C4133	CAP_402	m42a[36A6]
C4134	CAP_402	m42a[36A6]
C4135	CAP_402	m42a[36A5]
C4136	CAP_402	m42a[36A5]
C4137	CAP_402	m42a[36A4]
C4138	CAP_402	m42a[36A4]
C4139	CAP_402	m42a[36A4]
C4140	CAP_402	m42a[36B3]
C4150	CAP_402	m42a[36B6]
C4151	CAP_402	m42a[36B6]
C4200	CAP_402	m42a[37C7]
C4201	CAP_402	m42a[37C6]
C4202	CAP_402	m42a[37C6]
C4203	CAP_402	m42a[37C6]
C4204	CAP_402	m42a[37C7]
C4205	CAP_402	m42a[37C6]
C4206	CAP_402	m42a[37C6]
C4207	CAP_402	m42a[37C6]
C4210	CAP_1808	m42a[37A6]
C4211	CAP_402	m42a[37A6]
C4212	CAP_402	m42a[37A5]
C4411	CAP_402	m42a[38C2]
C4412	CAP_402	m42a[38C2]
C4416	CAP_603	m42a[38D4]
C4417	CAP_402	m42a[38D4]
C4418	CAP_402	m42a[38D4]
C4420	CAP_402	m42a[38C3]
C4422	CAP_402	m42a[38D4]
C4424	CAP_603	m42a[38D5]
C4425	CAP_402	m42a[38D3]
C4426	CAP_402	m42a[38D4]
C4428	CAP_402	m42a[38D3]
C4429	CAP_402	m42a[38D3]
C4430	CAP_402	m42a[38D3]
C4432	CAP_402	m42a[38D3]
C4500	CAP_402	m42a[39B5]
C4501	CAP_402	m42a[39A5]
C4510	CAP_402	m42a[39C3]
C4520	CAP_402	m42a[39B4]
C4521	CAP_402	m42a[39B3]
C4522	CAP_402	m42a[39A4]
C4523	CAP_402	m42a[39A3]
C4524	CAP_603-1	m42a[39A2]
C4525	CAP_402	m42a[39A2]
C4551	CAP_402	m42a[39A7]
C4552	CAP_402	m42a[39A7]
C4590	CAP_402	m42a[39C5]
C4900	CAP_402	m42a[40C4]
C4910	CAP_402	m42a[40C6]
C5100	CAP_402	m42a[41D6]
C5101	CAP_402	m42a[41D6]
C5102	CAP_402	m42a[41B5]
C5202	CAP_402	m42a[42C2]
C5203	CAP_402	m42a[42C2]
C5206	CAP_402	m42a[42B2]
C5207	CAP_402	m42a[42B2]
C5208	CAP_402	m42a[42C6]
C5209	CAP_402	m42a[42B6]
C5210	CAP_P_B2	m42a[42C6]
C5211	CAP_P_B2	m42a[42B6]
C5212	CAP_402	m42a[42C8]
C5213	CAP_603	m42a[42C8]
C5250	CAP_402	m42a[42C8]
C5251	CAP_402	m42a[42B8]
C5300	CAP_402	m42a[43B6]
C5301	CAP_402	m42a[43B6]
C5304	CAP_402	m42a[43D4]
C5305	CAP_402	m42a[43D4]
C5306	CAP_402	m42a[43D4]
C5307	CAP_402	m42a[43C4]
C5308	CAP_402	m42a[43C4]
C5309	CAP_603	m42a[43C3]
C5310	CAP_402	m42a[43C3]
C5498	CAP_402	m42a[44C5]
C5499	CAP_603	m42a[44C5]
C5802	CAP_805	m42a[45D3]
C5803	CAP_402	m42a[45D2]
C5804	CAP_402	m42a[45D2]
C5805	CAP_402	m42a[45D2]
C5806	CAP_402	m42a[45D1]
C5807	CAP_402	m42a[45D2]
C5820	CAP_402	m42a[45C3]
C5900	CAP_402	m42a[46D8]
C5901	CAP_402	m42a[46D8]
C5910	CAP_603	m42a[46A7]
C5911	CAP_402	m42a[46A7]
C5920	CAP_402	m42a[46C6]

C5921	CAP_402	m42a[46C6]
C5951	CAP_402	m42a[46A4]
C5965	CAP_402	m42a[46B8]
C5966	CAP_603	m42a[46B7]
C5967	CAP_402	m42a[46B7]
C5977	CAP_402	m42a[46C2]
C6100	CAP_402	m42a[48D3]
C6101	CAP_402	m42a[48C3]
C6102	CAP_402	m42a[48C2]
C6103	CAP_402	m42a[48C3]
C6104	CAP_402	m42a[48D4]
C6105	CAP_402	m42a[48C4]
C6112	CAP_402	m42a[48B2]
C6150	CAP_402	m42a[48C6]
C6200	CAP_402	m42a[49C5]
C6201	CAP_402	m42a[49C5]
C6202	CAP_402	m42a[49D4]
C6250	CAP_402	m42a[49B5]
C6251	CAP_402	m42a[49A5]
C6252	CAP_402	m42a[49B4]
C6301	CAP_402	m42a[50C2]
C6308	CAP_402	m42a[50C5]
C6309	CAP_402	m42a[50C6]
C6311	CAP_402	m42a[50C2]
C6312	CAP_402	m42a[50D3]
C6604	CAP_402	m42a[52B4]
C6605	CAP_402	m42a[52B4]
C6606	CAP_402	m42a[52B4]
C6620	CAP_402	m42a[52C4]
C6700	CAP_402	m42a[53C4]
C6701	CAP_402	m42a[53C4]
C6702	CAP_402	m42a[53C3]
C6703	CAP_402	m42a[53C3]
C6795	CAP_402	m42a[53C6]
C6796	CAP_402	m42a[53B6]
C6800	CAP_603	m42a[54D6]
C6801	CAP_402	m42a[54D6]
C6802	CAP_P_CASE-B3-LF	m42a[54D4]
C6803	CAP_P_CASE-B3-LF	m42a[54D3]
C6804	CAP_P_SMA-LF	m42a[54B4]
C6805	CAP_603	m42a[54B4]
C6806	CAP_603	m42a[54B3]
C6807	CAP_P_SMA-LF	m42a[54B3]
C6810	CAP_P_SMA-LF	m42a[54B2]
C6812	CAP_402	m42a[54B4]
C6813	CAP_402	m42a[54B3]
C6821	CAP_402	m42a[54C6]
C6822	CAP_603	m42a[54A5]
C6823	CAP_402	m42a[54A5]
C6825	CAP_402	m42a[54A4]
C6830	CAP_402	m42a[54D4]
C6833	CAP_402	m42a[54B2]
C6835	CAP_402	m42a[54D6]
C6836	CAP_402	m42a[54D3]
C6853	CAP_402	m42a[54B4]
C7200	CAP_P_SMC-LF	m42a[55D6]
C7201	CAP_P_CASE-B3-LF	m42a[55C4]
C7202	CAP_603	m42a[55C4]
C7203	CAP_P_CASE-B3-LF	m42a[55B4]
C7204	CAP_603	m42a[55B4]
C7205	CAP_P_CASE-B2	m42a[55B4]
C7206	CAP_603	m42a[55B4]
C7207	CAP_402	m42a[55C5]
C7208	CAP_402	m42a[55B5]
C7209	CAP_402	m42a[55A5]
C7210	CAP_402	m42a[55C6]
C7211	CAP_402	m42a[55C5]
C7220	CAP_402	m42a[55B6]
C7221	CAP_402	m42a[55B5]
C7230	CAP_402	m42a[55A6]
C7231	CAP_402	m42a[55A5]
C7260	CAP_402	m42a[55D2]
C7261	CAP_402	m42a[55C2]
C7270	CAP_402	m42a[55C2]
C7271	CAP_402	m42a[55B2]
C7280	CAP_402	m42a[55B2]
C7281	CAP_402	m42a[55B2]
C7300	CAP_402	m42a[56C7]
C7301	CAP_402	m42a[56C5]
C7302	CAP_402	m42a[56C5]
C7303	CAP_402	m42a[56C5]
C7304	CAP_402	m42a[56C5]
C7305	CAP_402	m42a[56C5]
C7306	CAP_402	m42a[56C8]
C7307	CAP_402	m42a[56C6]
C7308	CAP_402	m42a[56C6]
C7350	CAP_402	m42a[56A7]
C7351	CAP_603	m42a[56A7]
C7352	CAP_402	m42a[56A5]
C7353	CAP_402	m42a[56A5]
C7354	CAP_402	m42a[56A5]
C7355	CAP_402	m42a[56A5]
C7356	CAP_402	m42a[56A5]
C7357	CAP_402	m42a[56A8]
C7370	CAP_402	m42a[56A2]
C7371	CAP_402	m42a[56A2]
C7372	CAP_402	m42a[56A1]
C7400	CAP_402	m42a[57B4]
C7401	CAP_402	m42a[57D7]
C7402	CAP_402	m42a[57C7]
C7404	CAP_402	m42a[57C4]
C7411	CAP_402	m42a[57B7]
C7412	CAP_402	m42a[57B6]
C7414	CAP_402	m42a[57C4]
C7430	CAP_P_B2	m42a[57D2]
C7431	CAP_P_B2	m42a[57C2]
C7432	CAP_805-1	m42a[57B2]
C7433	CAP_805-1	m42a[57A2]
C7435	CAP_402	m42a[57B1]
C7440	CAP_402	m42a[57A4]
C7441	CAP_402	m42a[57A4]
C7445	CAP_402	m42a[57A3]
C7446	CAP_402	m42a[57A3]
C7447	CAP_402	m42a[57A3]
C7450	CAP_402	m42a[57A6]
C7451	CAP_402	m42a[57A7]
C7452	CAP_402	m42a[57A6]
C7500	CAP_402	m42a[58C4]
C7501	CAP_P_CASED2E-SM	m42a[58C3]
C7502	CAP_402	m42a[58B4]
C7503	CAP_402	m42a[58C2]
C7504	CAP_402	m42a[58B2]
C7505	CAP_402	m42a[58C8]
C7506	CAP_402	m42a[58B8]

www.laptopblue.vn

C7507	CAP_402	m42a[58B7]
C7508	CAP_P_CASED2E-SM	m42a[58C3]
C7509	CAP_P_CASED2E-SM	m42a[58D3]
C7510	CAP_402	m42a[58C8]
C7511	CAP_402	m42a[58B3]
C7512	CAP_402	m42a[58C3]
C7513	CAP_402	m42a[58B7]
C7514	CAP_402	m42a[58B8]
C7515	CAP_402	m42a[58C5]
C7516	CAP_402	m42a[58B4]
C7517	CAP_P_CASED2E-SM	m42a[58D3]
C7518	CAP_603	m42a[58D2]
C7521	CAP_402	m42a[58A6]
C7526	CAP_603	m42a[58D7]
C7527	CAP_402	m42a[58C5]
C7528	CAP_402	m42a[58B5]
C7529	CAP_402	m42a[58B5]
C7530	CAP_402	m42a[58C7]
C7531	CAP_402	m42a[58B5]
C7532	CAP_402	m42a[58B6]
C7533	CAP_402	m42a[58B6]
C7534	CAP_402	m42a[58B5]
C7535	CAP_603	m42a[58B6]
C7590	CAP_402	m42a[58C3]
C7592	CAP_402	m42a[58B3]
C7596	CAP_402	m42a[58D7]
C7599	CAP_603	m42a[58C2]
C7600	CAP_603	m42a[59C4]
C7601	CAP_603	m42a[59A4]
C7602	CAP_402	m42a[59A4]
C7604	CAP_402	m42a[59A2]
C7605	CAP_402	m42a[59A5]
C7607	CAP_402	m42a[59A3]
C7608	CAP_402	m42a[59D2]
C7609	CAP_402	m42a[59D7]
C7621	CAP_402	m42a[59B6]
C7622	CAP_402	m42a[59C5]
C7624	CAP_402	m42a[59C6]
C7625	CAP_402	m42a[59B6]
C7626	CAP_402	m42a[59B6]
C7628	CAP_402	m42a[59B7]
C7629	CAP_402	m42a[59B7]
C7630	CAP_402	m42a[59B5]
C7631	CAP_402	m42a[59C7]
C7632	CAP_402	m42a[59C2]
C7640	CAP_P_CASED2E-SM	m42a[59D6]
C7641	CAP_603	m42a[59D6]
C7650	CAP_805	m42a[59B7]
C7651	CAP_805	m42a[59B8]
C7652	CAP_P_SMC-LF	m42a[59B8]
C7661	CAP_402	m42a[59B3]
C7662	CAP_402	m42a[59C4]
C7664	CAP_402	m42a[59C3]
C7665	CAP_402	m42a[59B4]
C7666	CAP_402	m42a[59B3]
C7668	CAP_402	m42a[59B2]
C7669	CAP_402	m42a[59B2]
C7670	CAP_402	m42a[59B4]
C7680	CAP_P_CASED2E-SM	m42a[59D3]
C7681	CAP_603	m42a[59D4]
C7689	CAP_402	m42a[59B4]
C7690	CAP_805	m42a[59B2]
C7691	CAP_805	m42a[59B1]
C7692	CAP_P_SMC-LF	m42a[59B1]
C7700	CAP_603	m42a[60C4]
C7701	CAP_402	m42a[60C3]
C7702	CAP_603	m42a[60C3]
C7703	CAP_603	m42a[60C4]
C7704	CAP_402	m42a[60C3]
C7705	CAP_603	m42a[60C3]
C7720	CAP_402	m42a[60B4]
C7721	CAP_603	m42a[60B3]
C7750	CAP_402	m42a[60C6]
C7800	CAP_603	m42a[61C5]
C7801	CAP_603	m42a[61C6]
C7802	CAP_603	m42a[61C5]
C7803	CAP_402	m42a[61B2]
C7804	CAP_402	m42a[61C2]
C7805	CAP_402	m42a[61C2]
C7806	CAP_402	m42a[61B7]
C7807	CAP_402	m42a[61B6]
C7808	CAP_402	m42a[61B6]
C7809	CAP_402	m42a[61C4]
C7810	CAP_402	m42a[61B4]
C7830	CAP_P_CASED2E-SM	m42a[61C4]
C7831	CAP_603	m42a[61C4]
C7840	CAP_805	m42a[61B3]
C7841	CAP_805	m42a[61B3]
C7842	CAP_P_CASE-D2E-LF	m42a[61B3]
C7843	CAP_P_CASE-D2E-LF	m42a[61B2]
C7864	CAP_402	m42a[61C2]
C7900	CAP_603	m42a[62C4]
C7901	CAP_603	m42a[62A4]
C7902	CAP_402	m42a[62A4]
C7903	CAP_402	m42a[62A6]
C7904	CAP_402	m42a[62A2]
C7905	CAP_402	m42a[62A5]
C7906	CAP_402	m42a[62A6]
C7907	CAP_402	m42a[62A3]
C7908	CAP_402	m42a[62D2]
C7909	CAP_402	m42a[62C7]
C7921	CAP_402	m42a[62B6]
C7922	CAP_402	m42a[62C5]
C7924	CAP_402	m42a[62C6]
C7925	CAP_402	m42a[62B6]
C7926	CAP_402	m42a[62B6]
C7928	CAP_402	m42a[62B7]
C7929	CAP_402	m42a[62B7]
C7930	CAP_402	m42a[62B5]
C7931	CAP_402	m42a[62C7]
C7932	CAP_402	m42a[62C2]
C7940	CAP_P_CASED2E-SM	m42a[62C6]
C7941	CAP_603	m42a[62C6]
C7950	CAP_805	m42a[62B8]
C7952	CAP_P_CASE-D2E-LF	m42a[62B8]
C7961	CAP_402	m42a[62B3]
C7962	CAP_402	m42a[62C4]
C7964	CAP_402	m42a[62C3]
C7965	CAP_402	m42a[62B3]
C7966	CAP_402	m42a[62B3]
C7968	CAP_402	m42a[62B2]
C7969	CAP_402	m42a[62B2]
C7970	CAP_402	m42a[62B4]
C7980	CAP_P_CASED2E-SM	m42a[62C4]

C7981	CAP_603	m42a[62C4]
C7989	CAP_402	m42a[62B4]
C7990	CAP_805	m42a[62A7]
C7991	CAP_805	m42a[62A7]
C7992	CAP_P_CASE-D2E-LF	m42a[62B1]
C7999	CAP_402	m42a[62A6]
C8000	CAP_402	m42a[63D4]
C8005	CAP_402	m42a[63C4]
C8010	CAP_402	m42a[63C4]
C8015	CAP_402	m42a[63B4]
C8025	CAP_402	m42a[63A4]
C8060	CAP_402	m42a[63B3]
C8061	CAP_402	m42a[63B2]
C8062	CAP_402	m42a[63B2]
C8090	CAP_1206-1	m42a[63C3]
C8091	CAP_402	m42a[63D2]
C8092	CAP_402	m42a[63D1]
C8093	CAP_805	m42a[63D1]
C8202	CAP_402	m42a[65D7]
C8203	CAP_402	m42a[65C7]
C8205	CAP_402	m42a[65A5]
C8206	CAP_402	m42a[65A4]
C8209	CAP_402	m42a[65A5]
C8211	CAP_402	m42a[65A5]
C8215	CAP_402	m42a[65A4]
C8217	CAP_603	m42a[65C2]
C8218	CAP_402	m42a[65C4]
C8220	CAP_402	m42a[65A7]
C8221	CAP_402	m42a[65A7]
C8230	CAP_402	m42a[65C6]
C8300	CAP_402	m42a[66C7]
C8301	CAP_402	m42a[66C7]
C8302	CAP_402	m42a[66C7]
C8303	CAP_402	m42a[66C4]
C8304	CAP_402	m42a[66C5]
C8305	CAP_1206-1	m42a[66C4]
C8306	CAP_1206-1	m42a[66C3]
C8307	CAP_1206-1	m42a[66C3]
C8308	CAP_P_CASED2E-SM	m42a[66B4]
C8309	CAP_P_6.3X5.5SM1	m42a[66B3]
C8310	CAP_P_CASED2E-SM	m42a[66B3]
C8311	CAP_402	m42a[66C7]
C8312	CAP_402	m42a[66C5]
C8313	CAP_402	m42a[66C6]
C8316	CAP_402	m42a[66B4]
C8317	CAP_402	m42a[66B5]
C8318	CAP_402	m42a[66B4]
C8320	CAP_402	m42a[66B5]
C8321	CAP_402	m42a[66B5]
C8322	CAP_402	m42a[66B4]
C8323	CAP_402	m42a[66A5]
C8324	CAP_402	m42a[66A4]
C8325	CAP_402	m42a[66C7]
C8326	CAP_402	m42a[66C7]
C8327	CAP_402	m42a[66D7]
C8328	CAP_402	m42a[66B6]
C8340	CAP_402	m42a[66C7]
C8341	CAP_402	m42a[66B8]
C8370	CAP_402	m42a[66C3]
C8371	CAP_402	m42a[66C2]
C8372	CAP_402	m42a[66B1]
C8375	CAP_402	m42a[66B3]
C8381	CAP_603	m42a[66B3]
C9400	CAP_402	m42a[67C3]
C9401	CAP_402	m42a[67C3]
C9402	CAP_402	m42a[67C3]
C9403	CAP_402	m42a[67C3]
C9408	CAP_402	m42a[67A3]
C9409	CAP_402	m42a[67B2]
C9410	CAP_402	m42a[67A3]
C9411	CAP_402	m42a[67B5]
C9412	CAP_603	m42a[67B5]
C9413	CAP_402	m42a[67B6]
C9414	CAP_402	m42a[67D5]
C9415	CAP_402	m42a[67A3]
C9416	CAP_402	m42a[67A4]
C9459	CAP_402	m42a[67C5]
C9500	CAP_402	m42a[68D5]
C9501	CAP_402	m42a[68D4]
C9502	CAP_402	m42a[68D4]
C9503	CAP_402	m42a[68D4]
C9504	CAP_603	m42a[68D4]
C9505	CAP_603	m42a[68B2]
C9506	CAP_402	m42a[68C7]
C9507	CAP_402	m42a[68D5]
C9508	CAP_402	m42a[68D5]
C9509	CAP_402	m42a[68D4]
C9510	CAP_402	m42a[68D4]
C9511	CAP_402	m42a[68D4]
C9512	CAP_402	m42a[68D3]
C9513	CAP_603	m42a[68D3]
C9514	CAP_402	m42a[68D7]
C9519	CAP_402	m42a[68B6]
C9520	CAP_402	m42a[68B6]
C9521	CAP_402	m42a[68B3]
C9522	CAP_402	m42a[68D2]
C9523	CAP_402	m42a[68D2]
C9524	CAP_402	m42a[68C2]
C9525	CAP_402	m42a[68C2]
C9526	CAP_402	m42a[68C3]
C9527	CAP_402	m42a[68C1]
C9530	CAP_402	m42a[68D7]
C9531	CAP_402	m42a[68D7]
C9532	CAP_402	m42a[68C7]
C9533	CAP_402	m42a[68C7]
C9534	CAP_402	m42a[68C7]
C9535	CAP_402	m42a[68C7]
C9536	CAP_402	m42a[68D7]
C9537	CAP_402	m42a[68D7]
C9538	CAP_402	m42a[68D7]
C9539	CAP_402	m42a[68D7]
C9540	CAP_603	m42a[68D6]
C9541	CAP_402	m42a[68B5]
C9542	CAP_402	m42a[68B5]
C9543	CAP_402	m42a[68B5]
C9544	CAP_402	m42a[68B5]
C9545	CAP_402	m42a[68B5]
C9546	CAP_402	m42a[68B4]
C9547	CAP_402	m42a[68B4]
C9548	CAP_402	m42a[68B4]
C9804	CAP_402	m42a[69C4]
C9808	CAP_402	m42a[69C5]
C9809	CAP_402	m42a[69B5]
C9812	CAP_402	m42a[69B5]

C9820	CAP_402	m42a[69A4]
C9821	CAP_402	m42a[69A3]
C9824	CAP_402	m42a[69B5]
C9834	CAP_402	m42a[69A4]
C9839	CAP_402	m42a[69B7]
C9842	CAP_402	m42a[69C1]
C9843	CAP_402	m42a[69C1]
C9860	CAP_402	m42a[69C2]
D1986	DIODE_SCHOT_6PB_SOT-363	m42a[19C2 19D2]
D2502	DIODE_SCHOT_6PB_SOT-363	m42a[25C8 25D8]
D2600	DIODE_SCHOT_6PB_SOT-363	m42a[26D5 26D5]
D4520	DIODE_DUAL_6P_SOT-363	m42a[39B4 39B3]
D4521	DIODE_DUAL_6P_SOT-363	m42a[39A4 39A3]
D4550	ZENER_SOT23	m42a[39A6]
D4590	DIODE_SCHOT_SMB	m42a[39D4]
D4591	DPAK3P_SOT-363	m42a[39C5 39C5 39C5]
D4900	DIODE_SCHOT_3P_A_SC-75	m42a[40C6]
D5200	DIODE_SCHOT_3P_A_SC-75	m42a[42C3]
D5201	DIODE_SCHOT_3P_A_SC-75	m42a[42A3]
D7500	DIODE_SCHOT_SMB	m42a[58C3]
D7501	DIODE_SCHOT_SMB	m42a[58B3]
D7624	DIODE_SCHOT_SOD-323	m42a[59C6]
D7664	DIODE_SCHOT_SOD-323	m42a[59C3]
D7820	DIODE_SCHOT_SMB	m42a[61B4]
D7921	DIODE_SMB	m42a[62B7]
D7924	DIODE_SCHOT_SOD-323	m42a[62C6]
D7961	DIODE_SMB	m42a[62B2]
D7964	DIODE_SCHOT_SOD-323	m42a[62C3]
D8200	DIODE_SCHOT_3P_A_SC-75	m42a[65C7]
D8201	DPAK3P_SOT-363	m42a[65D4]
D8201	DPAK3P_SOT-363	m42a[66B3]
D8300	DIODE_SCHOT_SOD-123	m42a[66C5]
D8322	DPAK3P_SOT-363	m42a[66C8 66A5 66A6]
D9500	DIODE_DUAL_6P_SOT-363	m42a[68A7 68B7]
DZ7300	SUPPR_TRANSIENT_4P1_0405	m42a[56C6]
DZ7301	SUPPR_TRANSIENT_4P1_0405	m42a[56C6]
DZ7350	SUPPR_TRANSIENT_4P1_0405	m42a[56A6]
DZ7351	SUPPR_TRANSIENT_4P1_0405	m42a[56A6]
F8200	FUSE_1206	m42a[65D6]
F8300	FUSE_1206	m42a[66C3]
F9804	FUSE_SM-LF	m42a[69C5]
FL4520	FILTER_4P_2012	m42a[39B3]
FL4521	FILTER_4P_2012	m42a[39B3]
FL4590	FUSE_MINISMDC	m42a[39D5]
FL9800	FILTER_LC_SM-220MHZ-LF	m42a[69B5]
FL9801	FILTER_LC_SM-220MHZ-LF	m42a[69A5]
FL9802	FILTER_LC_SM-220MHZ-LF	m42a[69A5]
GV3901	HOLE_VIA	m42a[35C2]
GV3902	HOLE_VIA	m42a[35C2]
GV3903	HOLE_VIA	m42a[35C2]
GV3904	HOLE_VIA	m42a[35C2]
GV3905	HOLE_VIA	m42a[35B2]
GV3906	HOLE_VIA	m42a[35B2]
GV3907	HOLE_VIA	m42a[35B2]
GV3908	HOLE_VIA	m42a[35B2]
J1102	CON_F30STSM_5047_SM1	m42a[11B2]
J2600	CON_F2RT_S2MT_SM_F-RT-SM	m42a[26D6]
J2801	CON_F200RT_DDR2DIMM_TH1_F-RT-TH2	m42a[28D6]
J2901	CON_F200RT_DDR2DIMM_TH1_F-RT-TH2	m42a[29D5]
J3801	CON_M50ST_D2MT_SM_M-ST-SM	m42a[34C4]
J3901	CON_F19ST_S2MT_SM_F-ST-SM	m42a[35D8]
J4200	CON_RJ45_8RT_S2MT_SM_F-RT-SM	m42a[37C2]
J4500	CON_F6RT_S2MT_TH_F-RT-TH1	m42a[39B2]
J4900	CON_F10ST_D_SMA_F-ST-SM	m42a[40C4]
J5200	CON_F4RT_USB_S2MT_TH_F-RT-TH-M42	m42a[42D1]
J5201	CON_F4RT_USB_S2MT_TH_F-RT-TH-M42	m42a[42B1]
J5300	CON_F52RT_D2MT_SM_F-ST-SM	m42a[43C5]
J5400	CON_F4ST_S2MT_SM_F-S-T-SM	m42a[44C4]
J6000	CON_F30STSM_5047_SM1	m42a[47C6]
J6250	CON_F2ST_S2MT_SM_F-S-T-SM	m42a[49C6]
J6251	CON_F2ST_S2MT_SM_F-S-T-SM	m42a[49A6]
J6501	CON_F4ST_S2MT_SM_F-S-T-SM	m42a[51C3]
J7300	CON_F8RT_2MT_AUDIOOUT_TH_F-RT-TH	m42a[56C8]
J7301	CON_M3RT_S2MT_SM_M-RT-SM1	m42a[56D1]
J7302	CON_F2ST_S2MT_SM_F-S-T-SM	m42a[56D1]
J7303	CON_F4ST_S2MT_SM_F-S-T-SM	m42a[56C1]
J7350	CON_F8RT_2MT_AUDIOIN_TH_F-RT-TH	m42a[56B8]
J8200	CON_M5RT_S_SM_M-RT-SM	m42a[65D7]
J8250	CON_F20ST_D_SM_F-ST-SM1	m42a[65B6]
J9400	CON_F4ST_S2MT_SM_F-S-T-SM	m42a[67D2]
J9401	CON_F22RT_S4MT_SM_F-RT-SM	m42a[67B1]
J9801	CON_DVI_30RT_Q4MT_TH_1_RT-TH	m42a[69B4]

L1922	IND_0603	m42a[19A7]
L1934	IND_0603	m42a[19C5]
L1936	IND_0603	m42a[19C5]
L1970	IND_1210	m42a[19B4]
L1975	IND_0805	m42a[19A4]
L1985	IND_0603	m42a[19D3]
L1990	IND_0603	m42a[19C3]
L2500	IND_SM-3	m42a[25B8]
L2507	IND_1206	m42a[25A7]
L3301	IND_0402-LF	m42a[32D7]
L3302	IND_0402-LF	m42a[32D3]
L3901	FILTER_4P_2012H	m42a[35D6]
L3902	FILTER_4P_2012H	m42a[35D5]
L3912	IND_0402	m42a[35C6]
L4100	IND_0402-LF	m42a[36D3]
L4250	IND_0402-LF	m42a[37D7]
L4400	IND_0402	m42a[38D4]
L4510	IND_SM	m42a[39C3]
L4550	IND_SM-1	m42a[39A7]
L4900	IND_0402	m42a[40D5]
L4901	FILTER_4P_SM	m42a[40C6]
L4902	IND_0402	m42a[40C5]
L5200	FILTER_4P_SM	m42a[42C4]
L5201	FILTER_4P_SM	m42a[42B4]
L5202	IND_0402-LF	m42a[42D4]
L5203	IND_0402-LF	m42a[42C4]
L5204	IND_0402-LF	m42a[42C3]
L5205	IND_0402-LF	m42a[42A3]
L5400	FILTER_4P_SM	m42a[44B5]
L5410	IND_0402-LF	m42a[44C5]
L5411	IND_0402-LF	m42a[44B5]
L5910	IND_0603	m42a[46A7]
L6800	IND_0402	m42a[54A5]
L6801	IND_0402	m42a[54D6]
L7200	IND_0402	m42a[55C7]
L7210	IND_0402	m42a[55C7]
L7211	IND_0402	m42a[55A7]
L7220	IND_0402	m42a[55B7]
L7230	IND_0402	m42a[55A7]
L7300	IND_0402-LF	m42a[56D6]
L7301	IND_0402-LF	m42a[56D4]
L7302	IND_0402	m42a[56D6]
L7303	IND_0402	m42a[56C6]
L7304	IND_0402	m42a[56C4]
L7305	IND_0402	m42a[56C6]
L7306	IND_0402	m42a[56C4]
L7307	IND_0402	m42a[56C6]
L7350	IND_0402	m42a[56B6]
L7351	IND_0402	m42a[56B4]
L7352	IND_0402	m42a[56B6]
L7353	IND_0402	m42a[56B6]
L7354	IND_0402	m42a[56B4]
L7355	IND_0402	m42a[56B6]
L7356	IND_0402	m42a[56B4]
L7357	IND_0402	m42a[56A6]
L7370	IND_0402	m42a[56B2]
L7371	IND_0402	m42a[56B1]
L7372	IND_0402	m42a[56B2]
L7373	IND_0402	m42a[56B1]
L7374	IND_0402	m42a[56B2]
L7375	IND_0402	m42a[56B1]
L7390	IND_0402	m42a[56D8]
L7400	IND_0402	m42a[57B4]
L7500	IND_SM	m42a[58D2]
L7501	IND_SM	m42a[58B2]
L7620	IND_L812HW	m42a[59B7]
L7680	IND_SM	m42a[59B2]
L7820	IND_3P_SM	m42a[61B3]
L7920	IND_SM	m42a[62B7]
L7960	IND_3P_SM	m42a[62B2]
L8090	IND_CDPH4D19F-SM	m42a[63D1]
L8201	IND_SM-LF	m42a[65A3]
L8202	IND_0402-LF	m42a[65A3]
L8203	IND_0402-LF	m42a[65A3]
L8204	IND_0402-LF	m42a[65A3]
L8205	IND_SM-LF	m42a[65A3]
L8207	IND_0402	m42a[65A7]
L8208	IND_0402	m42a[65A7]
L8209	IND_0402	m42a[65A7]
L8300	IND_3P_SM	m42a[66C4]
L9400	IND_0402-LF	m42a[67D4]
L9401	IND_0402-LF	m42a[67C4]
L9402	IND_0402-LF	m42a[67D4]
L9403	IND_0402-LF	m42a[67D4]
L9404	IND_0402-LF	m42a[67B4]
L9405	IND_0402-LF	m42a[67A4]
L9407	FILTER_4P_SM	m42a[67A4]
L9408	IND_0402-LF	m42a[67B4]
L9500	IND_0402-LF	m42a[68D5]
L9501	IND_0402-LF	m42a[68D5]
L9503	IND_0402-LF	m42a[68D8]
L9504	IND_0402-LF	m42a[68C8]
L9505	IND_0402-LF	m42a[68C8]
L9506	IND_0402-LF	m42a[68D8]
L9804	FILTER_4P_SM1	m42a[69A2]
L9805	FILTER_4P_2012H	m42a[69B2]
L9806	FILTER_4P_2012H	m42a[69B2]
L9807	FILTER_4P_2012H	m42a[69B2]
L9844	IND_SM-1	m42a[69C4]
Q2680	TRA_SINGLE_MOSFET_NC_HN_SOT23	m42a[26A3]
Q3810	TRA_FDC638P_SM-LF	m42a[34C5]
Q3875	TRA_2N7002DW_SOT-363	m42a[34C6 34C7]
Q4590	TRA_FDC638P_SM-LF	m42a[39D5]
Q4591	TRA_2N7002_SOT23-LF	m42a[39C5]
Q5901	TRA_2N7002DW_SOT-363	m42a[46B4 46B5]
Q5950	TRA_2N3906_SOT23-LF	m42a[46A3]
Q5952	TRA_2N7002_SOT23-LF	m42a[46A3]
Q6100	TRA_SI3446DV_TSOP-LF	m42a[48A5]
Q6101	TRA_2N7002DW_SOT-363	m42a[48A6 48A7]
Q6150	TRA_TP0610_SOT23-3	m42a[48C6]
Q6151	TRA_2N7002_SOT23-LF	m42a[48C7]
Q6152	TRA_TP0610_SOT23-3	m42a[48C7]
Q6153	TRA_TP0610_SOT23-3	m42a[48C8]
Q6200	TRA_BC846BM3T5G_NPN_SOT732-3	m42a[49B6]
Q6560	TRA_2N7002_SOT23-LF	m42a[51B3]
Q6650	TRA_2N7002_SOT23-LF	m42a[52B6]
Q6651	TRA_TP0610_SOT23-3	m42a[52B6]
Q7400	TRA_2N7002DW_SOT-363	m42a[57C7 57D7]
Q7401	TRA_2N7002DW_SOT-363	m42a[57D5 57D6]
Q7402	TRA_2N7002DW_SOT-363	m42a[57B7 57C5]
Q7500	TRA_HAT2168H_LFPAK	m42a[58D3]
Q7501	TRA_HAT2165H_LFPAK	m42a[58D4]

www.laptopblue.vn

Q7502	TRA_HAT2168H_LFPAK	m42a[58C3]
Q7503	TRA_HAT2165H_LFPAK	m42a[58B4]
Q7504	TRA_HAT2165H_LFPAK	m42a[58D3]
Q7505	TRA_HAT2165H_LFPAK	m42a[58B3]
Q7620	TRA_STL8NH3LL_COMBO_	m42a[59C7]
	PWRFLT-3P3X3P3	
Q7621	TRA_STL8NH3LL_COMBO_	m42a[59B7]
	PWRFLT-3P3X3P3	
Q7660	TRA_STL8NH3LL_COMBO_	m42a[59C3]
	PWRFLT-3P3X3P3	
Q7661	TRA_STL8NH3LL_COMBO_	m42a[59B3]
	PWRFLT-3P3X3P3	
Q7750	TRA_2N7002DW_SOT-363	m42a[60C6 60C7]
Q7820	TRA_IRF7821_SO-8	m42a[61C4]
Q7821	TRA_IRF7832_SO-8	m42a[61B4]
Q7920	TRA_IRF7821_SO-8	m42a[62C6]
Q7921	TRA_IRF7832_SO-8	m42a[62B6]
Q7960	TRA_IRF7821_SO-8	m42a[62C3]
Q7961	TRA_IRF7832_SO-8	m42a[62B3]
Q8000	TRA_FDC638P_SM-LF	m42a[63D4]
Q8005	TRA_STL8NH3LL_COMBO_	m42a[63C4]
	PWRFLT-3P3X3P3	
Q8010	TRA_FDC638P_SM-LF	m42a[63D4]
Q8015	TRA_STL8NH3LL_COMBO_	m42a[63C4]
	PWRFLT-3P3X3P3	
Q8025	TRA_SI3447BDV_SOT-6	m42a[63A4]
Q8030	TRA_2N7002DW_SOT-363	m42a[63A6 63B6]
Q8031	TRA_2N7002DW_SOT-363	m42a[63D6 63A6]
Q8059	TRA_2N7002DW_SOT-363	m42a[63C7 63C7]
Q8060	TRA_2N7002_SOT23-LF	m42a[63C8]
Q8061	TRA_2N7002DW_SOT-363	m42a[63B7 63B7]
Q8062	TRA_2N7002_SOT23-LF	m42a[63B8]
Q8063	TRA_2N7002_SOT23-LF	m42a[63B4]
Q8210	TRA_2N7002DW_SOT-363	m42a[65C6 65C3]
Q8220	TRA_2N7002DW_SOT-363	m42a[65C7 65C6]
Q8240	TRA_TP0610_SOT23-3	m42a[65C5]
Q8250	TRA_SI4405DY_SO-8	m42a[65D2]
Q8298	TRA_TP0610_SOT23-3	m42a[65C7]
Q8299	TRA_2N7002_SOT23-LF	m42a[65C7]
Q8300	TRA_SI4405DY_SO-8	m42a[66D5]
Q8301	TRA_HAT2168H_LFPAK	m42a[66C4]
Q8302	TRA_HAT2165H_LFPAK	m42a[66B4]
Q8320	TRA_SI4405DY_SO-8	m42a[66B3]
Q8321	TRA_SI4405DY_SO-8	m42a[66B3]
Q8322	TRA_2N7002DW_SOT-363	m42a[66A4 66A4]
Q8324	TRA_2N7002DW_SOT-363	m42a[66A3 66A4]
Q8340	TRA_IRLML5203_SM	m42a[66C8]
Q8350	TRA_2N7002_SOT23-LF	m42a[66A6]
Q9403	TRA_FDC638P_SM-LF	m42a[67B6]
Q9404	TRA_2N7002_SOT23-LF	m42a[67B7]
Q9405	TRA_TP0610_SOT23-3	m42a[67D5]
Q9406	TRA_2N7002_SOT23-LF	m42a[67D6]
Q9801	TRA_2N7002DW_SOT-363	m42a[69D6 69D6]
R0610	RES_402	m42a[6A7]
R0611	RES_402	m42a[6A8]
R0612	RES_402	m42a[6A8]
R0621	RES_402	m42a[6A7]
R0702	RES_402	m42a[7D5]
R0703	RES_402	m42a[7C5]
R0704	RES_402	m42a[7C5]
R0705	RES_402	m42a[7B4]
R0706	RES_402	m42a[7B4]
R0707	RES_402	m42a[7A4]
R0712	RES_402	m42a[7A4]
R0716	RES_402	m42a[7B2]
R0717	RES_402	m42a[7B2]
R0718	RES_402	m42a[7B2]
R0719	RES_402	m42a[7B2]
R0720	RES_402	m42a[7B7]
R0721	RES_402	m42a[7B7]
R0722	RES_402	m42a[7A7]
R0730	RES_402	m42a[7A4]
R0802	RES_402	m42a[8B6]
R0803	RES_402	m42a[8A7]
R0921	RES_402	m42a[9D2]
R0922	RES_402	m42a[9D2]
R0923	RES_402	m42a[9C2]
R0924	RES_402	m42a[9C2]
R0925	RES_402	m42a[9C2]
R0926	RES_402	m42a[9C2]
R0927	RES_402	m42a[9C2]
R1001	RES_402	m42a[10B6]
R1002	RES_402	m42a[10B6]
R1005	RES_402	m42a[10C4]
R1006	RES_402	m42a[10C3]
R1100	RES_402	m42a[11B5]
R1101	RES_402	m42a[11C5]
R1102	RES_402	m42a[11B4]
R1103	RES_402	m42a[11C5]
R1104	RES_402	m42a[11B5]
R1106	RES_402	m42a[11A3]
R1210	RES_402	m42a[12C3]
R1211	RES_402	m42a[12C3]
R1220	RES_402	m42a[12B7]
R1221	RES_402	m42a[12B7]
R1225	RES_402	m42a[12B7]
R1226	RES_402	m42a[12B7]
R1230	RES_402	m42a[12A7]
R1231	RES_402	m42a[12A7]
R1235	RES_402	m42a[12A7]
R1236	RES_402	m42a[12A7]
R1310	RES_402	m42a[13D3]
R1410	RES_402	m42a[14C2]
R1411	RES_402	m42a[14C2]
R1420	RES_402	m42a[14C6]
R1421	RES_402	m42a[14C6]
R1422	RES_402	m42a[14B6]
R1430	RES_402	m42a[14B6]
R1440	RES_402	m42a[14D6]
R1441	RES_402	m42a[14D6]
R1950	RES_402	m42a[19D5]
R1951	RES_402	m42a[19D5]
R1975	RES_402	m42a[19A4]
R1985	RES_402	m42a[19D3]
R1986	RES_402	m42a[19C6]
R1987	RES_402	m42a[19C6]
R1988	RES_402	m42a[19C7]
R1989	RES_402	m42a[19C7]
R1990	RES_402	m42a[19C3]
R2058	RES_402	m42a[20B4]
R2059	RES_402	m42a[20B4]
R2060	RES_402	m42a[20A4]
R2075	RES_402	m42a[20C7]
R2077	RES_402	m42a[20B7]

R2079	RES_402	m42a[20B7]
R2085	RES_402	m42a[20C4]
R2100	RES_402	m42a[21C3]
R2101	RES_402	m42a[21C4]
R2105	RES_402	m42a[21D6]
R2107	RES_402	m42a[21C2]
R2108	RES_402	m42a[21C2]
R2110	RES_402	m42a[21C2]
R2194	RES_402	m42a[21D4]
R2195	RES_402	m42a[21C6]
R2196	RES_402	m42a[21C6]
R2197	RES_402	m42a[21C6]
R2198	RES_402	m42a[21C6]
R2199	RES_402	m42a[21C3]
R2200	RES_402	m42a[22D7]
R2203	RES_402	m42a[22C2]
R2204	RES_402	m42a[22C2]
R2205	RES_402	m42a[22C6]
R2206	RES_402	m42a[22C5]
R2207	RES_402	m42a[22C5]
R2208	RES_402	m42a[22D5]
R2211	RES_402	m42a[22B3]
R2223	RES_402	m42a[22D6]
R2225	RES_402	m42a[22D7]
R2226	RES_402	m42a[22D5]
R2250	RES_402	m42a[22D7]
R2251	RES_402	m42a[22D6]
R2255	RES_402	m42a[22D7]
R2299	RES_402	m42a[22B5]
R2300	RES_402	m42a[23C7]
R2302	RES_402	m42a[23D3]
R2303	RES_402	m42a[23D3]
R2305	RES_402	m42a[23D3]
R2306	RES_402	m42a[23B7]
R2307	RES_402	m42a[23A7]
R2308	RES_402	m42a[23B7]
R2309	RES_402	m42a[23A7]
R2310	RES_402	m42a[23A7]
R2311	RES_402	m42a[23A7]
R2312	RES_402	m42a[23A3]
R2313	RES_402	m42a[23A7]
R2314	RES_402	m42a[23A7]
R2315	RES_402	m42a[23A3]
R2316	RES_402	m42a[23D7]
R2317	RES_402	m42a[23D7]
R2318	RES_402	m42a[23D7]
R2319	RES_402	m42a[23D2]
R2320	RES_402	m42a[23D7]
R2323	RES_402	m42a[23D5]
R2326	RES_402	m42a[23D6]
R2327	RES_402	m42a[23D6]
R2343	RES_402	m42a[23D1]
R2388	RES_402	m42a[23B2]
R2389	RES_402	m42a[23A4]
R2390	RES_402	m42a[23B3]
R2395	RES_402	m42a[23D7]
R2396	RES_402	m42a[23D6]
R2397	RES_402	m42a[23D6]
R2398	RES_402	m42a[23D8]
R2399	RES_402	m42a[23C1]
R2500	RES_603	m42a[25A8]
R2501	RES_402	m42a[25C8]
R2502	RES_402	m42a[25D8]
R2600	RES_402	m42a[26D4]
R2606	RES_402	m42a[26D5]
R2607	RES_402	m42a[26D5]
R2609	RES_402	m42a[26C7]
R2610	RES_402	m42a[26C7]
R2611	RES_402	m42a[26B5]
R2612	RES_402	m42a[26A5]
R2622	RES_402	m42a[26A5]
R2636	RES_402	m42a[26C2]
R2637	RES_402	m42a[26C2]
R2638	RES_402	m42a[26C2]
R2639	RES_402	m42a[26C2]
R2640	RES_402	m42a[26C2]
R2641	RES_402	m42a[26C2]
R2642	RES_402	m42a[26C2]
R2643	RES_402	m42a[26C2]
R2680	RES_402	m42a[26B3]
R2681	RES_402	m42a[26B2]
R2682	RES_402	m42a[26A2]
R2683	RES_402	m42a[26B2]
R2684	RES_402	m42a[26B2]
R2685	RES_402	m42a[26B2]
R2687	RES_402	m42a[26B2]
R2688	RES_402	m42a[26A3]
R2689	RES_402	m42a[26A2]
R2696	RES_402	m42a[26C6]
R2697	RES_402	m42a[26C5]
R2698	RES_402	m42a[26C5]
R2700	RES_402	m42a[27D7]
R2701	RES_402	m42a[27D7]
R2750	RES_402	m42a[27D4]
R2751	RES_402	m42a[27D4]
R2760	RES_402	m42a[27C4]
R2761	RES_402	m42a[27C4]
R2770	RES_402	m42a[27D2]
R2771	RES_402	m42a[27D2]
R2780	RES_402	m42a[27C2]
R2781	RES_402	m42a[27C2]
R2782	RES_402	m42a[27B2]
R2783	RES_402	m42a[27B2]
R2800	RES_402	m42a[28D2]
R2801	RES_402	m42a[28D2]
R2900	RES_402	m42a[29A4]
R2901	RES_402	m42a[29D2]
R2902	RES_402	m42a[29D2]
R3001	RES_402	m42a[30D4]
R3009	RES_402	m42a[30D4]
R3011	RES_402	m42a[30C4]
R3025	RES_402	m42a[30C4]
R3035	RES_402	m42a[30B4]
R3100	RES_402	m42a[31C5]
R3104	RES_402	m42a[31C5]
R3300	RES_402	m42a[32B6]
R3301	RES_402	m42a[32B7]
R3302	RES_402	m42a[32D4]
R3303	RES_402	m42a[32C4]
R3304	RES_402	m42a[32C7]
R3400	RES_402	m42a[33C1]
R3401	RES_402	m42a[33C7]
R3402	RES_402	m42a[33C1]
R3403	RES_402	m42a[33C1]

R3404	RES_402	m42a[33D1]
R3405	RES_402	m42a[33C1]
R3406	RES_402	m42a[33B1]
R3407	RES_402	m42a[33B1]
R3408	RES_402	m42a[33C1]
R3409	RES_402	m42a[33C1]
R3410	RES_402	m42a[33C1]
R3411	RES_402	m42a[33D4]
R3412	RES_402	m42a[33D4]
R3413	RES_402	m42a[33D4]
R3414	RES_402	m42a[33D4]
R3415	RES_402	m42a[33D4]
R3416	RES_402	m42a[33D4]
R3417	RES_402	m42a[33C7]
R3418	RES_402	m42a[33B4]
R3419	RES_402	m42a[33B4]
R3420	RES_402	m42a[33A4]
R3421	RES_402	m42a[33A4]
R3422	RES_402	m42a[33C4]
R3423	RES_402	m42a[33C4]
R3426	RES_402	m42a[33C4]
R3427	RES_402	m42a[33C4]
R3428	RES_402	m42a[33C4]
R3429	RES_402	m42a[33D8]
R3430	RES_402	m42a[33D7]
R3431	RES_402	m42a[33B1]
R3432	RES_402	m42a[33D7]
R3433	RES_402	m42a[33D8]
R3434	RES_402	m42a[33D4]
R3435	RES_402	m42a[33C4]
R3436	RES_402	m42a[33B1]
R3437	RES_402	m42a[33B1]
R3438	RES_402	m42a[33D1]
R3439	RES_402	m42a[33D1]
R3440	RES_402	m42a[33D1]
R3441	RES_402	m42a[33D1]
R3442	RES_402	m42a[33C1]
R3450	RES_402	m42a[33C7]
R3451	RES_402	m42a[33B7]
R3452	RES_402	m42a[33B7]
R3453	RES_402	m42a[33B7]
R3454	RES_402	m42a[33B7]
R3463	RES_402	m42a[33D7]
R3465	RES_402	m42a[33C4]
R3466	RES_402	m42a[33A7]
R3467	RES_402	m42a[33A7]
R3468	RES_402	m42a[33C7]
R3469	RES_402	m42a[33C7]
R3470	RES_402	m42a[33C7]
R3471	RES_402	m42a[33B7]
R3472	RES_402	m42a[33B7]
R3473	RES_402	m42a[33B7]
R3474	RES_402	m42a[33B8]
R3475	RES_402	m42a[33B7]
R3476	RES_402	m42a[33A7]
R3477	RES_402	m42a[33B4]
R3478	RES_402	m42a[33B4]
R3480	RES_402	m42a[33C7]
R3481	RES_402	m42a[33B1]
R3482	RES_402	m42a[33B1]
R3490	RES_402	m42a[33A4]
R3824	RES_402	m42a[34C4]
R3825	RES_402	m42a[34C5]
R3851	RES_402	m42a[34C4]
R3853	RES_402	m42a[34C3]
R3858	RES_402	m42a[34B5]
R3859	RES_402	m42a[34B4]
R3865	RES_402	m42a[34C6]
R3876	RES_402	m42a[34C7]
R3877	RES_402	m42a[34C6]
R3900	RES_402	m42a[35D3]
R3901	RES_402	m42a[35C3]
R3950	RES_402	m42a[35B7]
R4101	RES_402	m42a[36D8]
R4102	RES_402	m42a[36C8]
R4103	RES_402	m42a[36B4]
R4104	RES_402	m42a[36B4]
R4105	RES_402	m42a[36B4]
R4106	RES_402	m42a[36B5]
R4107	RES_402	m42a[36D8]
R4117	RES_402	m42a[36B3]
R4118	RES_402	m42a[36B3]
R4119	RES_402	m42a[36B3]
R4120	RES_402	m42a[36B4]
R4122	RES_402	m42a[36A3]
R4123	RES_402	m42a[36A2]
R4124	RES_402	m42a[36A2]
R4130	RES_402	m42a[36B6]
R4131	RES_402	m42a[36B6]
R4200	RES_402	m42a[37A6]
R4201	RES_402	m42a[37A5]
R4202	RES_402	m42a[37A5]
R4203	RES_402	m42a[37A5]
R4400	RES_402	m42a[38C3]
R4420	RES_402	m42a[38C2]
R4431	RES_402	m42a[38A6]
R4432	RES_402	m42a[38A6]
R4452	RES_402	m42a[38C3]
R4500	RES_402	m42a[39B6]
R4501	RES_402	m42a[39B6]
R4502	RES_402	m42a[39B5]
R4503	RES_402	m42a[39B5]
R4504	RES_402	m42a[39A5]
R4550	RES_402	m42a[39A7]
R4590	RES_402	m42a[39C5]
R4591	RES_402	m42a[39C5]
R4593	RES_402	m42a[39C6]
R4594	RES_402	m42a[39C6]
R4595	RES_402	m42a[39C5]
R4910	RES_402	m42a[40C6]
R5100	RES_402	m42a[41C6]
R5250	RES_402	m42a[42C8]
R5251	RES_402	m42a[42C8]
R5301	RES_402	m42a[43B4]
R5302	RES_402	m42a[43B4]
R5303	RES_402	m42a[43C4]
R5801	RES_402	m42a[45D1]
R5802	RES_402	m42a[45C1]
R5803	RES_402	m42a[45C1]
R5809	RES_402	m42a[45D2]
R5898	RES_402	m42a[45C2]
R5899	RES_402	m42a[45D3]
R5900	RES_402	m42a[46D7]
R5901	RES_603	m42a[46D8]

R5905	RES_402	m42a[46D4]
R5906	RES_402	m42a[46D4]
R5910	RES_603	m42a[46C8]
R5911	RES_402	m42a[46A6]
R5918	RES_402	m42a[46C5]
R5919	RES_402	m42a[46C5]
R5920	RES_402	m42a[46C5]
R5922	RES_402	m42a[46C5]
R5923	RES_402	m42a[46C5]
R5924	RES_402	m42a[46C4]
R5925	RES_402	m42a[46C5]
R5926	RES_402	m42a[46C4]
R5927	RES_402	m42a[46C5]
R5928	RES_402	m42a[46D4]
R5929	RES_402	m42a[46C5]
R5930	RES_402	m42a[46C5]
R5931	RES_402	m42a[46C4]
R5932	RES_402	m42a[46C4]
R5933	RES_402	m42a[46C4]
R5934	RES_402	m42a[46C5]
R5935	RES_402	m42a[46C4]
R5936	RES_402	m42a[46C5]
R5937	RES_402	m42a[46C4]
R5938	RES_402	m42a[46C5]
R5939	RES_402	m42a[46C4]
R5940	RES_402	m42a[46C5]
R5941	RES_402	m42a[46C4]
R5942	RES_402	m42a[46C5]
R5943	RES_402	m42a[46B4]
R5944	RES_402	m42a[46B4]
R5945	RES_402	m42a[46C4]
R5946	RES_402	m42a[46C4]
R5947	RES_402	m42a[46B4]
R5948	RES_402	m42a[46C5]
R5949	RES_402	m42a[46C4]
R5950	RES_402	m42a[46A3]
R5951	RES_402	m42a[46A3]
R5952	RES_402	m42a[46A3]
R5953	RES_402	m42a[46D5]
R5954	RES_402	m42a[46B5]
R5955	RES_402	m42a[46B5]
R5970	RES_402	m42a[46D3]
R5971	RES_402	m42a[46D3]
R5972	RES_402	m42a[46C7]
R5973	RES_402	m42a[46C5]
R5976	RES_402	m42a[46D1]
R5977	RES_402	m42a[46C1]
R5980	RES_402	m42a[46D5]
R5981	RES_402	m42a[46D5]
R5982	RES_402	m42a[46D5]
R5983	RES_402	m42a[46C5]
R5984	RES_402	m42a[46C5]
R5985	RES_402	m42a[46C5]
R5986	RES_402	m42a[46C5]
R5987	RES_402	m42a[46C5]
R5988	RES_402	m42a[46B5]
R5989	RES_402	m42a[46D5]
R5990	RES_402	m42a[46B2]
R5991	RES_402	m42a[46B2]
R5992	RES_402	m42a[46B2]
R5993	RES_402	m42a[46B2]
R5994	RES_402	m42a[46D5]
R5995	RES_402	m42a[46D5]
R5996	RES_402	m42a[46B4]
R5997	RES_402	m42a[46B4]
R5998	RES_402	m42a[46C4]
R5999	RES_402	m42a[46C4]
R6100	RES_402	m42a[48D3]
R6102	RES_402	m42a[48C2]
R6103	RES_402	m42a[48C3]
R6105	RES_402	m42a[48D4]
R6106	RES_402	m42a[48C4]
R6107	RES_402	m42a[48D4]
R6108	RES_402	m42a[48C4]
R6112	RES_402	m42a[48B2]
R6140	RES_402	m42a[48A7]
R6141	RES_402	m42a[48A7]
R6142	RES_402	m42a[48A6]
R6143	RES_1206	m42a[48A4]
R6144	RES_402	m42a[48A6]
R6150	RES_402	m42a[48C6]
R6151	RES_402	m42a[48B6]
R6152	RES_402	m42a[48C7]
R6153	RES_402	m42a[48B7]
R6200	RES_402	m42a[49C5]
R6201	RES_402	m42a[49C5]
R6203	RES_402	m42a[49D3]
R6251	RES_402	m42a[49A5]
R6252	RES_402	m42a[49B3]
R6301	RES_402	m42a[50D4]
R6302	RES_402	m42a[50D4]
R6303	RES_402	m42a[50C3]
R6306	RES_402	m42a[50C2]
R6307	RES_402	m42a[50C5]
R6308	RES_402	m42a[50D3]
R6309	RES_402	m42a[50C5]
R6560	RES_402	m42a[51C3]
R6561	RES_402	m42a[51B4]
R6565	RES_402	m42a[51C3]
R6621	RES_402	m42a[52A5]
R6650	RES_402	m42a[52B6]
R6652	RES_402	m42a[52B7]
R6700	RES_402	m42a[53C7]
R6702	RES_402	m42a[53C4]
R6703	RES_402	m42a[53C4]
R6704	RES_805	m42a[53C2]
R6705	RES_805	m42a[53C3]
R6798	RES_402	m42a[53B6]
R6799	RES_402	m42a[53B6]
R6800	RES_402	m42a[54C6]
R6801	RES_402	m42a[54B5]
R6802	RES_402	m42a[54A5]
R6807	RES_402	m42a[54D7]
R6808	RES_402	m42a[54D3]
R6809	RES_402	m42a[54C3]
R6810	RES_402	m42a[54A4]
R6811	RES_402	m42a[54A4]
R6850	RES_402	m42a[54B7]
R6851	RES_402	m42a[54B7]
R6852	RES_402	m42a[54B7]
R6853	RES_402	m42a[54A7]
R6854	RES_402	m42a[54B4]
R7201	RES_402	m42a[55C4]
R7202	RES_402	m42a[55A4]

www.laptopblue.vn

R7210	RES_402	m42a[55A7]
R7260	RES_402	m42a[55D2]
R7261	RES_402	m42a[55C2]
R7270	RES_402	m42a[55C2]
R7271	RES_402	m42a[55C2]
R7280	RES_402	m42a[55B2]
R7281	RES_402	m42a[55B2]
R7300	RES_402	m42a[56C4]
R7301	RES_402	m42a[56C4]
R7320	RES_402	m42a[56B5]
R7321	RES_402	m42a[56D7]
R7322	RES_402	m42a[56B7]
R7349	RES_402	m42a[56B7]
R7350	RES_402	m42a[56A4]
R7351	RES_402	m42a[56A4]
R7380	RES_402	m42a[56C2]
R7382	RES_402	m42a[56B2]
R7391	RES_402	m42a[56C7]
R7401	RES_402	m42a[57D8]
R7402	RES_402	m42a[57D7]
R7403	RES_402	m42a[57C7]
R7404	RES_402	m42a[57C4]
R7405	RES_402	m42a[57D5]
R7406	RES_402	m42a[57D6]
R7411	RES_402	m42a[57C8]
R7412	RES_402	m42a[57B7]
R7413	RES_402	m42a[57C6]
R7414	RES_402	m42a[57C4]
R7415	RES_402	m42a[57C5]
R7430	RES_603	m42a[57C3]
R7431	RES_603	m42a[57B3]
R7432	RES_402	m42a[57B3]
R7433	RES_402	m42a[57A3]
R7434	RES_402	m42a[57C2]
R7435	RES_402	m42a[57C2]
R7436	RES_402	m42a[57B2]
R7437	RES_402	m42a[57B2]
R7438	RES_402	m42a[57C2]
R7439	RES_402	m42a[57B2]
R7440	RES_402	m42a[57A5]
R7450	RES_402	m42a[57A7]
R7451	RES_402	m42a[57A7]
R7452	RES_402	m42a[57A7]
R7453	RES_402	m42a[57A7]
R7454	RES_402	m42a[57A7]
R7460	RES_402	m42a[57C6]
R7461	RES_402	m42a[57C7]
R7500	RES_402	m42a[58C2]
R7501	RES_402	m42a[58C2]
R7502	RES_805	m42a[58B3]
R7503	RES_805	m42a[58D3]
R7504	RES_402	m42a[58C1]
R7505	RES_402	m42a[58B2]
R7506	RES_402	m42a[58C7]
R7507	RES_402	m42a[58B1]
R7508	RES_402	m42a[58B8]
R7509	RES_402	m42a[58B8]
R7510	RES_402	m42a[58B6]
R7511	RES_402	m42a[58B8]
R7512	RES_402	m42a[58D7]
R7513	RES_402	m42a[58B7]
R7514	RES_402	m42a[58B8]
R7515	RES_402	m42a[58B5]
R7516	RES_402	m42a[58B4]
R7517	RES_402	m42a[58B5]
R7518	RES_402	m42a[58B5]
R7519	RES_402	m42a[58C7]
R7520	RES_402	m42a[58D7]
R7521	RES_402	m42a[58D8]
R7522	RES_402	m42a[58A5]
R7523	RES_402	m42a[58A6]
R7524	RES_402	m42a[58D5]
R7525	RES_402	m42a[58C5]
R7526	THERMISTER_402	m42a[58C7]
R7527	RES_402	m42a[58C8]
R7530	RES_402	m42a[58B4]
R7531	THERMISTER_0603-LF	m42a[58B4]
R7543	RES_402	m42a[58B2]
R7545	RES_402	m42a[58C7]
R7600	RES_402	m42a[59C5]
R7603	RES_402	m42a[59A3]
R7604	RES_402	m42a[59A3]
R7606	RES_402	m42a[59A3]
R7607	RES_402	m42a[59A3]
R7621	RES_402	m42a[59C7]
R7624	RES_402	m42a[59C6]
R7625	RES_402	m42a[59B6]
R7626	RES_402	m42a[59C7]
R7627	RES_402	m42a[59B7]
R7628	RES_402	m42a[59B7]
R7629	RES_402	m42a[59C7]
R7630	RES_402	m42a[59C5]
R7661	RES_402	m42a[59C2]
R7664	RES_402	m42a[59C3]
R7665	RES_402	m42a[59B4]
R7666	RES_402	m42a[59C2]
R7667	RES_402	m42a[59B2]
R7668	RES_402	m42a[59B2]
R7669	RES_402	m42a[59C2]
R7670	RES_402	m42a[59C4]
R7720	RES_402	m42a[60B3]
R7721	RES_402	m42a[60A3]
R7750	RES_402	m42a[60C6]
R7751	RES_402	m42a[60C7]
R7752	RES_402	m42a[60C7]
R7753	RES_402	m42a[60B7]
R7800	RES_402	m42a[61C4]
R7801	RES_402	m42a[61B2]
R7802	RES_1206	m42a[61C3]
R7803	RES_402	m42a[61C2]
R7804	RES_402	m42a[61C7]
R7805	RES_402	m42a[61B7]
R7806	RES_402	m42a[61B7]
R7807	RES_402	m42a[61C5]
R7808	RES_402	m42a[61B6]
R7810	RES_402	m42a[61B4]
R7821	RES_402	m42a[61B2]
R7822	RES_402	m42a[61B2]
R7860	RES_603	m42a[61C3]
R7861	RES_402	m42a[61C2]
R7863	RES_402	m42a[61C2]
R7900	RES_402	m42a[62C5]
R7901	RES_402	m42a[62B1]
R7902	RES_1206	m42a[62A7]

R7903	RES_402	m42a[62A3]
R7904	RES_402	m42a[62A3]
R7905	RES_402	m42a[62A6]
R7906	RES_402	m42a[62A3]
R7907	RES_402	m42a[62A3]
R7921	RES_402	m42a[62C7]
R7924	RES_402	m42a[62C6]
R7925	RES_402	m42a[62B6]
R7926	RES_402	m42a[62C7]
R7927	RES_402	m42a[62B8]
R7928	RES_402	m42a[62B8]
R7929	RES_402	m42a[62C7]
R7930	RES_402	m42a[62C5]
R7961	RES_402	m42a[62C2]
R7964	RES_402	m42a[62C3]
R7965	RES_402	m42a[62B3]
R7966	RES_402	m42a[62C2]
R7967	RES_402	m42a[62B2]
R7968	RES_402	m42a[62B2]
R7969	RES_402	m42a[62C2]
R7970	RES_402	m42a[62C4]
R7990	RES_402	m42a[62A6]
R7991	RES_402	m42a[62A6]
R7992	RES_603	m42a[62A7]
R8000	RES_402	m42a[63D5]
R8005	RES_402	m42a[63C5]
R8010	RES_402	m42a[63C5]
R8015	RES_402	m42a[63B5]
R8025	RES_402	m42a[63A5]
R8030	RES_402	m42a[63B6]
R8031	RES_402	m42a[63B6]
R8032	RES_402	m42a[63D6]
R8033	RES_402	m42a[63D6]
R8050	RES_402	m42a[63A6]
R8056	RES_402	m42a[63C8]
R8057	RES_402	m42a[63C8]
R8058	RES_402	m42a[63B8]
R8059	RES_402	m42a[63B8]
R8061	RES_402	m42a[63B1]
R8062	RES_402	m42a[63B1]
R8063	RES_402	m42a[63A1]
R8064	RES_402	m42a[63A1]
R8065	RES_402	m42a[63B2]
R8091	RES_402	m42a[63D1]
R8092	RES_402	m42a[63C1]
R8200	RES_402	m42a[65B7]
R8201	RES_402	m42a[65C5]
R8202	RES_402	m42a[65C5]
R8203	RES_402	m42a[65C6]
R8204	RES_402	m42a[65C6]
R8205	RES_805	m42a[65D4]
R8206	RES_402	m42a[65C4]
R8207	RES_402	m42a[65C4]
R8208	RES_402	m42a[65C4]
R8209	RES_402	m42a[65C4]
R8210	RES_402	m42a[65C4]
R8211	RES_402	m42a[65C6]
R8213	RES_402	m42a[65C2]
R8214	RES_402	m42a[65C2]
R8231	RES_402	m42a[65C5]
R8232	RES_402	m42a[65C6]
R8233	RES_402	m42a[65C5]
R8296	RES_402	m42a[65B7]
R8297	RES_402	m42a[65C3]
R8298	RES_402	m42a[65C8]
R8299	RES_402	m42a[65C7]
R8300	RES_402	m42a[66C6]
R8301	RES_402	m42a[66C7]
R8302	RES_402	m42a[66C5]
R8303	RES_402	m42a[66C5]
R8304	RES_805	m42a[66B2]
R8305	RES_402	m42a[66C5]
R8306	RES_402	m42a[66C7]
R8308	RES_0612	m42a[66C3]
R8309	RES_402	m42a[66B6]
R8310	RES_402	m42a[66C5]
R8311	RES_402	m42a[66B7]
R8312	RES_402	m42a[66C7]
R8320	RES_2525	m42a[66B3]
R8322	RES_402	m42a[66A3]
R8323	RES_402	m42a[66A3]
R8324	RES_402	m42a[66A4]
R8325	RES_402	m42a[66A5]
R8330	RES_402	m42a[66B4]
R8331	RES_402	m42a[66A4]
R8340	RES_402	m42a[66C8]
R8341	RES_402	m42a[66B8]
R8342	RES_402	m42a[66C8]
R8343	RES_402	m42a[66B8]
R8344	RES_402	m42a[66B8]
R8350	RES_402	m42a[66B5]
R8351	RES_402	m42a[66B6]
R8352	RES_402	m42a[66B5]
R8360	RES_402	m42a[66D7]
R8361	RES_402	m42a[66C7]
R8362	RES_402	m42a[66B7]
R8363	RES_402	m42a[66B6]
R8364	RES_402	m42a[66B6]
R8365	RES_402	m42a[66B6]
R8367	RES_402	m42a[66C6]
R8370	RES_402	m42a[66C2]
R8371	RES_402	m42a[66B2]
R8381	RES_603	m42a[66B4]
R8397	RES_0612	m42a[66C4]
R9400	RES_402	m42a[67D6]
R9401	RES_402	m42a[67D6]
R9402	RES_402	m42a[67C7]
R9408	RES_402	m42a[67B5]
R9409	RES_402	m42a[67B5]
R9413	RES_402	m42a[67A6]
R9414	RES_402	m42a[67B7]
R9415	RES_402	m42a[67B7]
R9416	RES_402	m42a[67B7]
R9423	RES_402	m42a[67B6]
R9428	RES_402	m42a[67C5]
R9500	RES_402	m42a[68A7]
R9501	RES_402	m42a[68B6]
R9502	RES_402	m42a[68B6]
R9503	RES_402	m42a[68A4]
R9504	RES_402	m42a[68B2]
R9505	RES_402	m42a[68B2]
R9506	RES_402	m42a[68B1]
R9507	RES_402	m42a[68D2]
R9508	RES_402	m42a[68D2]

R9509	RES_402	m42a[68C2]
R9510	RES_402	m42a[68C2]
R9537	RES_402	m42a[68D1]
R9538	RES_402	m42a[68D1]
R9539	RES_402	m42a[68C1]
R9540	RES_402	m42a[68C1]
R9821	RES_402	m42a[69D7]
R9822	RES_402	m42a[69D6]
R9850	RES_402	m42a[69B8]
R9851	RES_402	m42a[69B8]
R9852	RES_402	m42a[69A8]
R9853	RES_402	m42a[69A8]
R9854	RES_402	m42a[69A8]
R9855	RES_402	m42a[69A8]
R9856	RES_402	m42a[69B6]
R9859	RES_402	m42a[69A6]
R9860	RES_402	m42a[69C3]
R9861	RES_402	m42a[69C3]
R9862	RES_402	m42a[69C5]
R9863	RES_402	m42a[69C5]
R9864	RES_402	m42a[69A6]
R9868	RES_402	m42a[69C8]
R9869	RES_402	m42a[69C8]
R9870	RES_402	m42a[69C1]
R9871	RES_402	m42a[69C1]
RP2300	RPAK4P_SM-LF	m42a[23D5]
RP2600	RPAK4P_SM-LF	m42a[26D2]
RP2601	RPAK4P_SM-LF	m42a[26D2]
RP2602	RPAK4P_SM-LF	m42a[26C2]
RP3000	RPAK4P_SM-LF	m42a[30B4 30C4 30D4 30D4]
RP3001	RPAK4P_SM-LF	m42a[30C4 30A4 30A4 30D4]
RP3002	RPAK4P_SM-LF	m42a[30A4 30A4 30A4 30D4]
RP3003	RPAK4P_SM-LF	m42a[30C4 30C4 30C4 30D4]
RP3004	RPAK4P_SM-LF	m42a[30C4 30C4 30D4]
RP3005	RPAK4P_SM-LF	m42a[30B4 30A4 30A4 30D4]
RP3006	RPAK4P_SM-LF	m42a[30B4 30B4 30A4 30D4]
RP3007	RPAK4P_SM-LF	m42a[30C4 30C4 30C4 30C4]
RP3008	RPAK4P_SM-LF	m42a[30C4 30C4 30C4 30C4]
RP3009	RPAK4P_SM-LF	m42a[30B4 30B4 30C4 30C4]
RP3010	RPAK4P_SM-LF	m42a[30B4 30B4 30B4 30B4]
RP3011	RPAK4P_SM-LF	m42a[30B4 30A4 30B4 30B4]
T4201	XFR_1000BT_82400275_ XFR-SM	m42a[37C6]
T4202	XFR_1000BT_82400275_ XFR-SM	m42a[37B6]
U0700	CPU_YONAH_BGA	m42a[7C3 7D7]
U0700	CPU_YONAH_BGA	m42a[8D8 8D4]
U1001	ADT7461_MSOP	m42a[10C5]
U1200	NB_945GM_BGA	m42a[12D5]
U1200	NB_945GM_BGA	m42a[13D4]
U1200	NB_945GM_BGA	m42a[14D5]
U1200	NB_945GM_BGA	m42a[15D3 15D7]
U1200	NB_945GM_BGA	m42a[16D2 16C8]
U1200	NB_945GM_BGA	m42a[17D5]
U1200	NB_945GM_BGA	m42a[18D4 18D7]
U1900	LREG_TPS73115_SOT23-5	m42a[19D6]
U1901	MM157_SOT23-5-LF	m42a[19C4]
U2100	SB_ICH7M_BGA	m42a[21D6]
U2100	SB_ICH7M_BGA	m42a[22B7 22D3]
U2100	SB_ICH7M_BGA	m42a[23D4]
U2100	SB_ICH7M_BGA	m42a[24D4 24D7]
U2601	MC74VHC1G08_SC70	m42a[26A5]
U2603	MC74VHC1G00_SC70-5	m42a[26A7]
U2680	MC74VHC1G08_SC70	m42a[26B3]
U3100	LREG_BD3533FVM_MSOP-8	m42a[31C4]
U3301	CLK_SYN_SLG8LP436_QFN	m42a[32C5]
U4101	88E8053_QFN	m42a[36D6]
U4102	EEPROM_M24C08_SO8	m42a[36A3]
U4400	FW32306_BGA_BGA	m42a[38C5]
U5100	CY8C24794_MLF	m42a[41C5]
U5200	SWI_TPS2042B_MSOP	m42a[42C7]
U5800	SMC_HBS2116_BGA	m42a[45A8 45C3 45C7 45D7]
U5900	VDET_RN5VD_SOT23-5	m42a[46D7]
U5910	OSC_12P_SG-3040LC-SM	m42a[46A7]
U5977	COMPARATOR_LMC7211_SM-LF	m42a[46C2]
U6100	OPAMP_LMV2011_SOT23-5	m42a[48C3]
U6200	MAX6695_UMAX	m42a[49D4]
U6250	MAX6695_UMAX	m42a[49B4]
U6301	FLASH_SST25VF016B_SOI_SOI	m42a[50D3]
U6620	KXM52_QFN	m42a[52C5]
U6650	LIS3L02AL_LGA	m42a[52B5]
U6700	TPM_TSSOP	m42a[53C5]
U6800	AUDIO_STAC92204XR_LQFP	m42a[54D5]
U7210	MAX9705_TDFN1	m42a[55C5]
U7220	MAX9705_TDFN1	m42a[55B5]
U7230	MAX9705_TDFN1	m42a[55A5]
U7400	MAX9890_UCSP1	m42a[57C2]
U7500	ISL6262_QFN	m42a[58C6]
U7600	LTC3728L_QFN	m42a[59C5]
U7700	MAX8887_SOT23-5	m42a[60D4]
U7701	MAX8887_SOT23-5	m42a[60C4]
U7720	LREG_MAX8516_SOP	m42a[60B3]
U7800	ISL6269_QFN	m42a[61C5]
U7801	AMP_INA326_MSOP	m42a[61C2]
U7900	LTC3728L_QFN	m42a[62C5]
U7901	AMP_INA326_MSOP	m42a[62A6]
U8070	LTC2908_LLP	m42a[63B2]
U8080	MC74VHC1G08_SC70	m42a[63B1]
U8090	LT3470_TSOT23-8	m42a[63D3]
U8200	COMPARATOR_LMC7211_SM-LF	m42a[65C4]
U8250	MC74VHC1G08_SC70	m42a[65C3]
U8290	COMPARATOR_LM397_SOT23-5	m42a[65C5]
U8300	ISL6255_QFN	m42a[66C6]
U8370	INA193_SOT23-5	m42a[66C3]
U8375	INA193_SOT23-5	m42a[66B2]
U9453	MC74VHC1G08_SC70	m42a[67C5]
U9500	SIL1362_LQFP	m42a[68B4]
U9801	VIDEO_TS3V330_SOP	m42a[69B7]
U9804	SN74LVC2G125_US	m42a[69C2 69C2]
VR5965	VREF_ISL6000233_SOT23-3	m42a[46C7]
VR6800	LREG_TPS79501_SOT223-6	m42a[54A5]
XW5800	SHORT_SM	m42a[45C3]
XW7200	SHORT_SM	m42a[55A5]

XW7300	SHORT_SM	m42a[56C4]
XW7301	SHORT_SM	m42a[56B4]
XW7302	SHORT_SM	m42a[56C2]
XW7303	SHORT_SM	m42a[56C2]
XW7304	SHORT_SM	m42a[56B2]
XW7305	SHORT_SM	m42a[56B7]
XW7400	SHORT_SM	m42a[57A7]
XW7500	SHORT_SM	m42a[58A6]
XW7600	SHORT_SM	m42a[59A5]
XW7620	JUMPER_OPEN-SAWTOOTH	m42a[59B8]
XW7660	JUMPER_OPEN-SAWTOOTH	m42a[59B1]
XW7800	SHORT_SM	m42a[61B5]
XW7900	SHORT_SM	m42a[62A5]
XW7920	JUMPER_OPEN-SAWTOOTH	m42a[62B8]
XW8101	SHORT_SM	m42a[64B2]
XW8102	SHORT_SM	m42a[64B2]
XW8300	SHORT_SM	m42a[66B4]
Y2600	CRYSTAL_4PIN_SM-LF	m42a[26C7]
Y3301	CRYSTAL_5X3.2-SM	m42a[32C7]
Y4101	CRYSTAL_4PIN_SM-3.2X2.5MM	m42a[36B6]
Y4403	CRYSTAL_4PIN_SM-3.2X2.5MM	m42a[38C2]
Y5920	CRYSTAL_5X3.2-SM	m42a[46C7]
Y6795	CRYSTAL_4PIN_SM-LF	m42a[53B6]
Z0601	MTGHOLE	m42a[6B8]
Z0602	MTGHOLE	m42a[6C6]
Z0603	PCB_STANDOFF	m42a[6A8]
Z0604	PCB_STANDOFF	m42a[6A6]
Z0605	PCB_STANDOFF	m42a[6A8]
Z0606	MTGHOLE	m42a[6D6]
Z0607	MTGHOLE	m42a[6C6]
Z0608	MTGHOLE	m42a[6C6]
Z0609	MTGHOLE	m42a[6B7]
Z0610	MTGHOLE	m42a[6B6]
Z0611	MTGHOLE	m42a[6B7]
Z0612	PCB_STANDOFF	m42a[6A6]
Z0613	PCB_STANDOFF	m42a[6A5]
Z0621	PCB_STANDOFF	m42a[6A6]
ZS0620	SPRING_CLIP_1P_EMI_CLIP-SM-M42	m42a[6D7]
ZS0621	CLIP_SM	m42a[6D6]