ZRT/ZRTA GDDR3 BWD ULT SYSTEM BLOCK DIAGRAM

Laptopblue

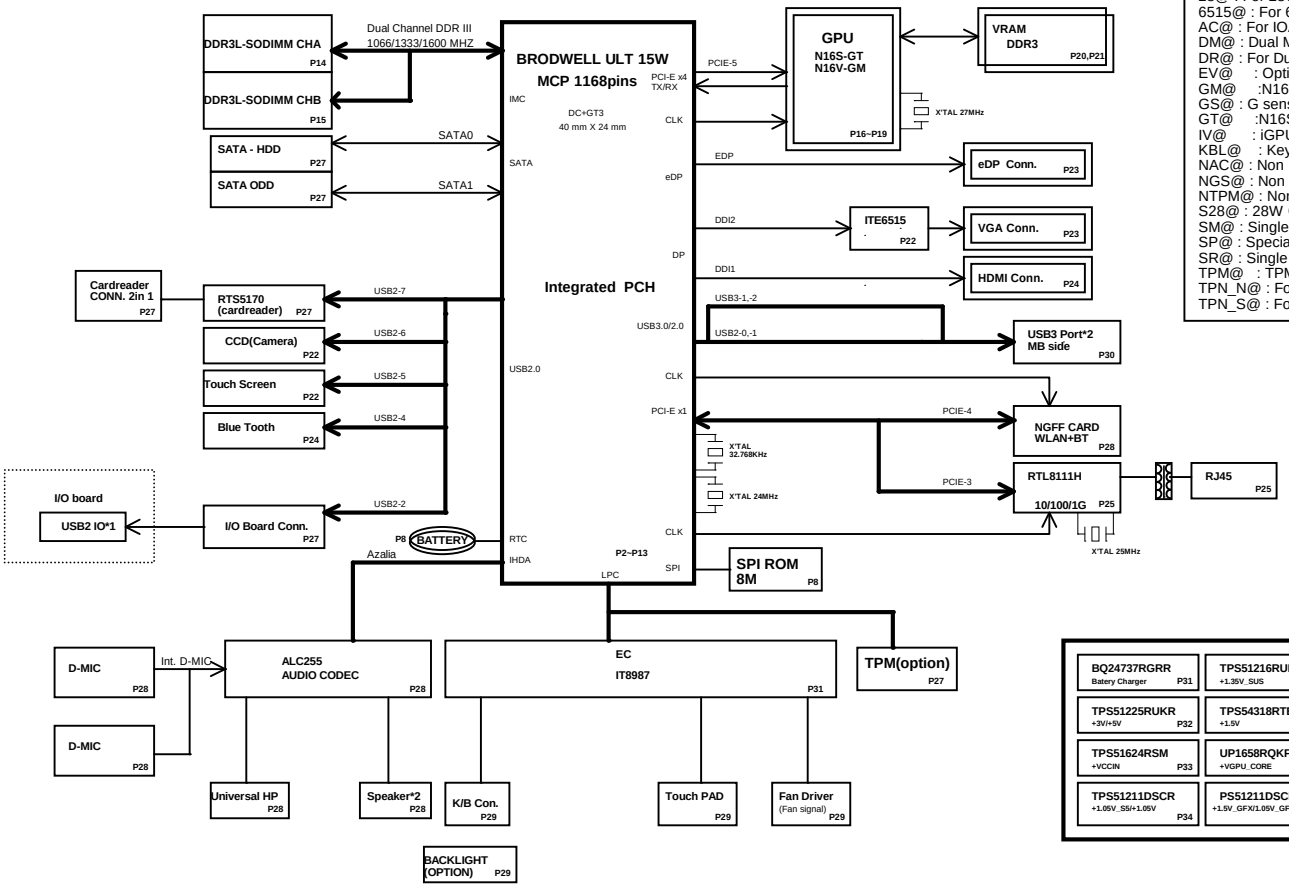

BOM

15@ : For 15W CPU
28@ : For 28W CPU
6515@ : For 6515 stuff
AC@ : For IOAC
DM@ : Dual MIC
DR@ : For Dual Rank
EV@ : Optimus
GM@ :N16V-GM /WO GC6
GS@ : G sensor
GT@ :N16S-GT /GC6
IV@ : iGPU
KBL@ : Keyboard backlight
NAC@ : Non IOAC
NGS@ : Non G sensor
NTPM@ : Non TPM
S28@ : 28W Change BOM
SM@ : Single MIC
SP@ : Special
SR@ : Single Rank
TPM@ : TPM
TPN_N@ : For TPM 2.0
TPN_S@ : For TPM 1.2

BQ24737RGRR Batery Charger P31	TPS51216RUKR +1.35V_SUS P35	Thermal Protection Discharger P36
TPS51225RUKR +3V/+5V P32	TPS54318RTER +1.5V P36	
TPS51624RSM +VCCIN P33	UP1658RQKF +VGPU_CORE P37	
TPS51211DSCR +1.05V_S5/+1.05V P34	PS51211DSCR +1.5V_GFX/1.05V_GFX/3V_GFX P38	

Quanta Computer Inc.
PROJECT : ZRT/ZRTA
Size | Document Number | Block Diagram | Rev 3A
Date: Wednesday, February 11, 2015 | Sheet 1 of 44

Laptopblue

Haswell ULT (DISPLAY,eDP)

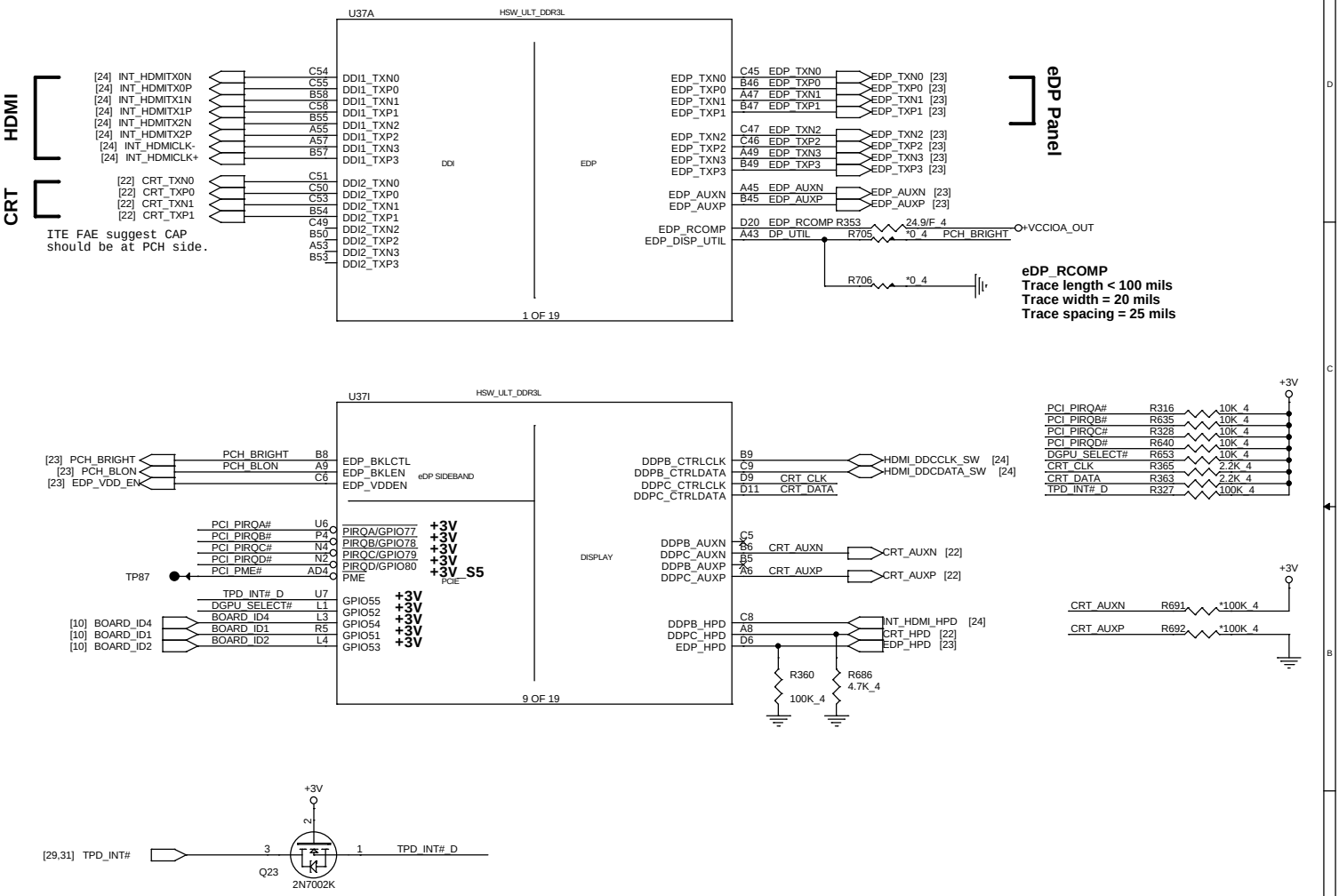

Quanta Computer Inc.			
PROJECT : ZRT/ZRTA			
Size	Document Number		Rev
	Haswell 3/5 (DDI/eDP)		3A
Date: Wednesday, February 11, 2015	Sheet 2 of 44		

Change Data and DQS to interleave.

Laptopblue

Haswell ULT (DDR3L)

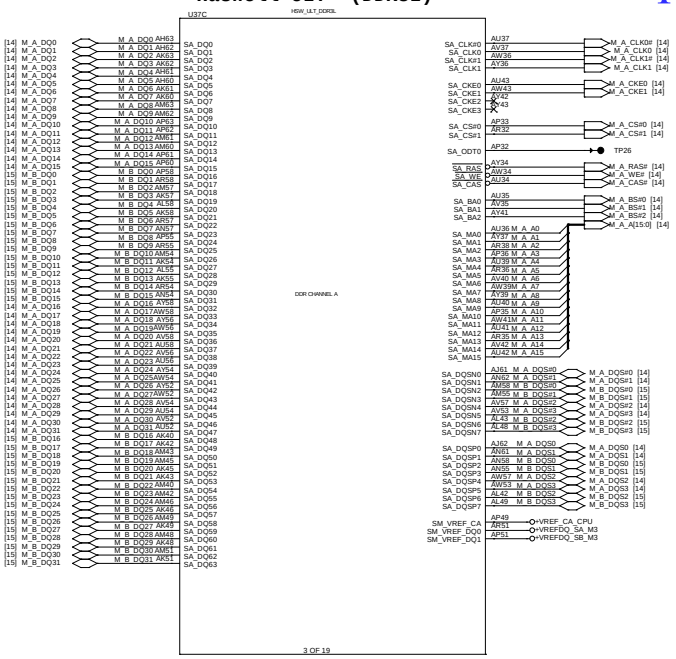

Haswell Processor (DDR3)

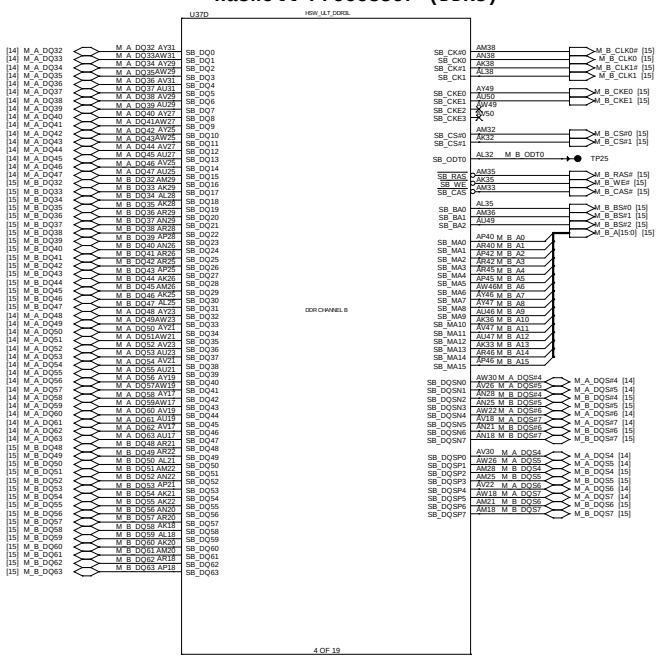

Quanta Computer Inc.

PROJECT : ZRT/ZRTA

Size	Document Number	Rev
	Haswell 2/5 (DDR3 I/F)	3A

Date: Wednesday, February 11, 2015 Sheet 3 of 44

Laptopblue

Haswell ULT (SIDEBAND)

H_PECI (50ohm)
Route on microstrip only
Spacing >18 mils
Trace Length: 0.4~6.125 iches

H_PWRGOOD (50ohm)
Trace Length: 1~11.25 inches

CPU_PLTRST# (50ohm)
Trace Length: 10~17 inches

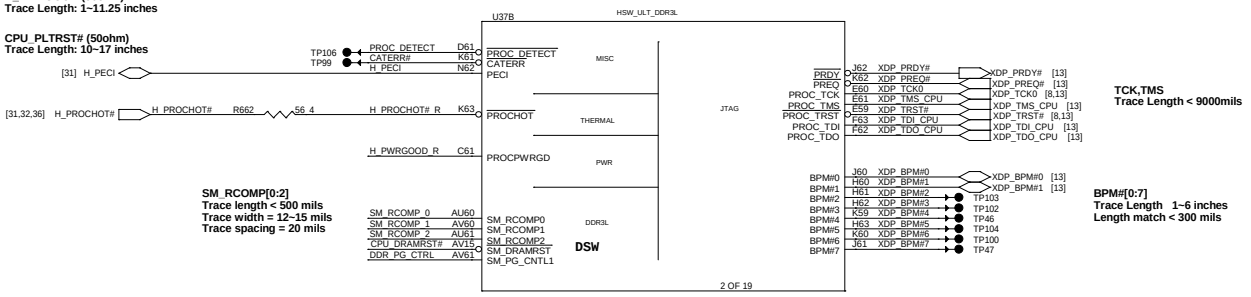

TCK,TMS
Trace Length < 9000mils

SM_RCOMP[0:2]
Trace length < 500 mils
Trace width = 12~15 mils
Trace spacing = 20 mils

BPM#[0:7]
Trace Length 1~6 inches
Length match < 300 mils

DRAM COMP

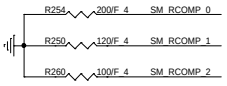

XDP PU/PD

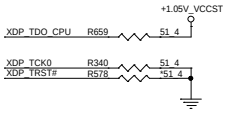

DDR3L ODT GENERATION

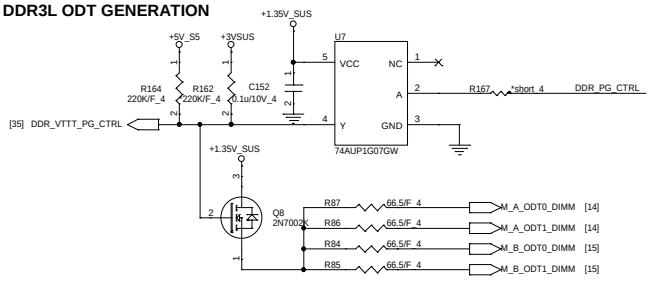

PU/PD of CPU

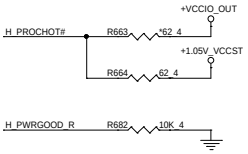

DRAMRST

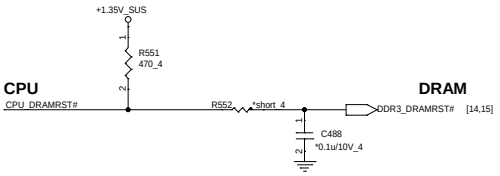

Quanta Computer Inc.
PROJECT : ZRT/ZRTA

Size	Document Number	Rev
	Haswell 1/5 (PEG/DMI/FDI)	3A

Date: Wednesday, February 11, 2015 Sheet 4 of 44

Laptopblue

VDDQ Output Decoupling Recommendations		
330uFx2	7343	BOT socket side
22uFx11	0805	5 onTOP, 6 on BOT inside socket cavity
10uFx10	0805	5 onTOP, 5 on BOT inside socket cavity

Haswell ULT (POWER)

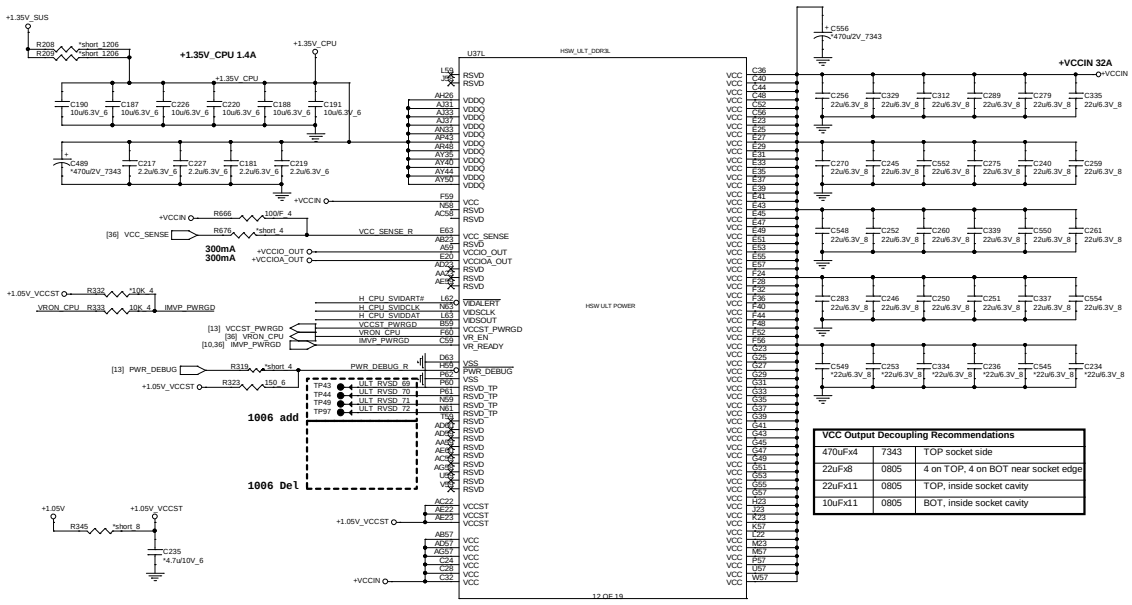

VCC Output Decoupling Recommendations		
470uFx4	7343	TOP socket side
22uFx8	0805	4 on TOP, 4 on BOT near socket edge
22uFx11	0805	TOP, inside socket cavity
10uFx11	0805	BOT, inside socket cavity

HWPG_1.05V for DDR=1.5V

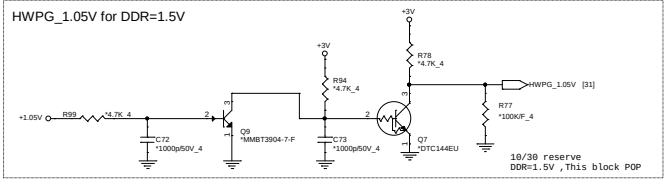

VCCST PWRGD

CRB is via +1.05V PG

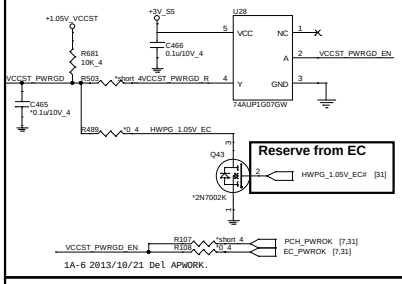

Reserve from EC

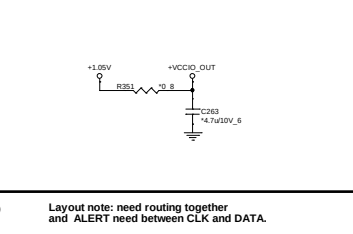

1A-6 2013/10/21 Del APWORK.

SVID

Layout note: need routing together and ALERT need between CLK and DATA.

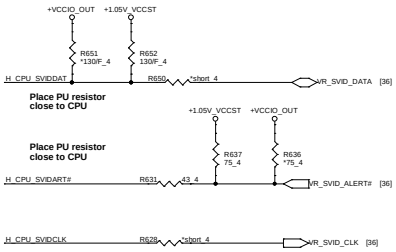

Quanta Computer Inc.

PROJECT : ZRT/ZRTA

Size	Document Number	Rev
	Haswell 4/5 (POWER)	3A

Date: Wednesday, February 11, 2015 Sheet 5 of 44

Haswell ULT (CFG,RSVD)

Laptopblue

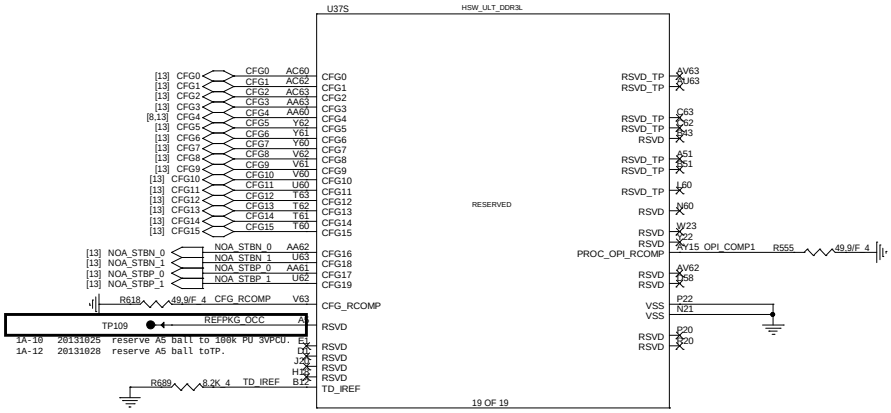

Processor Strapping

	1	0	
CFG0 EAR-STALL/NOT STALL RESET SEQUENCE AFTER PCU PLL IS LOCKED	**(DEFAULT) NORMAL OPERATION; NO STALL**	STALL	CFG0 R289 *1K 4
CFG1 PCH/ PCH LESS MODE SELECTION	**(DEFAULT) NORMAL OPERATION**	PCH-LESS MODE	CFG1 R606 *1K 4
CFG3 PHYSICAL_DEBUG_ENABLED (DFX PRIVACY)	**DISABLED NO PHYSICAL DISPLAY PORT ATTACHED TO EMBEDDED DISPLAY PORT**	ENABLED AN EXTERNAL DISPLAY PORT DEVICE IS CONNECTED TO THE EMBEDDED DISPLAY PORT	CFG3 R610 *1K 4
CFG 8 ALLOW THE USE OF NOA ON LOCKED UNITS	**DISABLED(DEFAULT); IN THIS CASE, NOA WILL BE DISABLED IN LOCKED UNITS AND ENABLED IN UN-LOCKED UNITS**	ENABLED; NOA WILL BE AVAILABLE REGARDLESS OF THE LOCKING OF THE UNIT	CFG8 R614 *1K 4
CFG9 NO SVID PROTOCOL CAPABLE VR CONNECTED	**VRS SUPPORTING SVID PROTOCOL ARE PRESENT**	NO VR SUPPORTING SVID IS PRESENT. THE CHIP WILL NOT GENERATE (OR RESPOND TO) SVID ACTIVITY	CFG9 R619 *1K 4
CFG10 SAFE MODE BOOT	**POWER FEATURES ACTIVATED DURING RESET**	POWER FEATURES (ESPECIALLY CLOCK GATINE ARE NOT ACTIVATED	CFG10 R295 *1K 4

Quanta Computer Inc.

PROJECT : ZRT/ZRTA

Size	Document Number	Rev
	Haswell 5/5 (CFG/GND)	3A

Date: Wednesday, February 11, 2015 Sheet 6 of 44

Haswell ULT PCH (PM)

Laptopblue

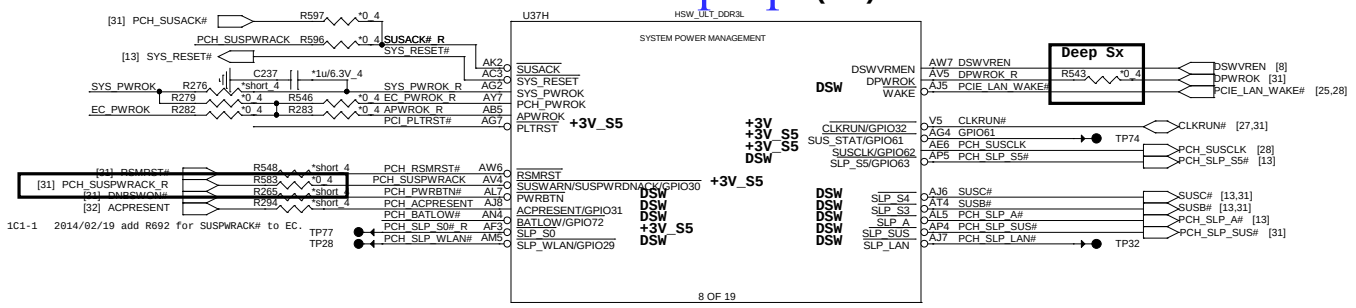

1C1-1 2014/02/19 add R692 for SUSPWRACK# to EC.

Power Sequence

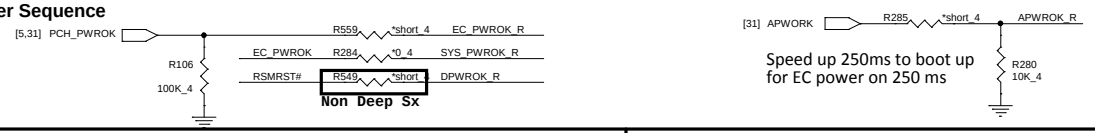

Speed up 250ms to boot up for EC power on 250 ms

PCH PM PU/PD

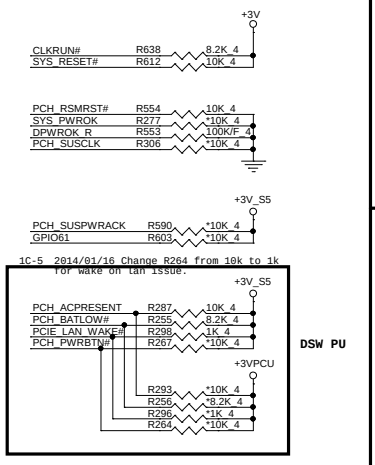

PLTRST# Buffer

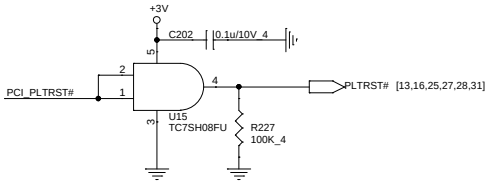

SYSPWOK

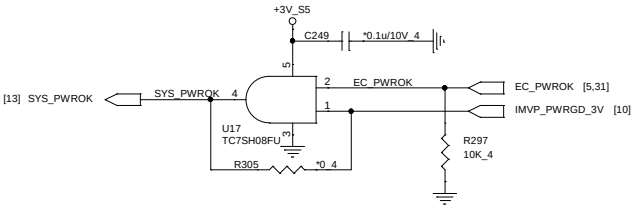

Deep Sx Circuit

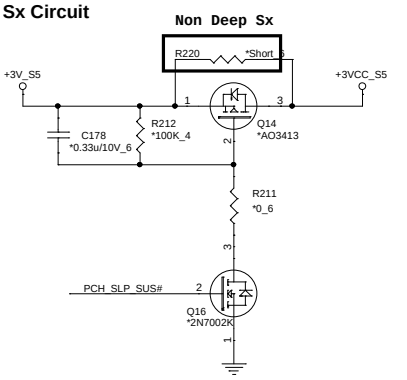

Quanta Computer Inc.		
PROJECT : ZRT/ZRTA		
Size	Document Number: LPT 1/6 (DMI/FDI/VGA)	Rev 3A
Date: Wednesday, February 11, 2015	Sheet 7 of 44	

Laptopblue

RTC Clock 32.768KHz (RTC)

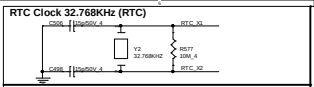

RTC Circuitry (RTC)

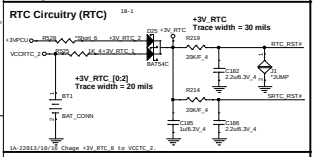

HDA

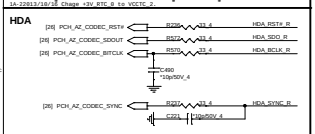

PCH JTAG

JTAG_TCK,JTAG_TMS
Trace Length < 9000mils

MP remove(Intel)

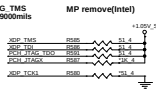

Haswell ULT PCH (RTC/HDA/SATA/SPI)

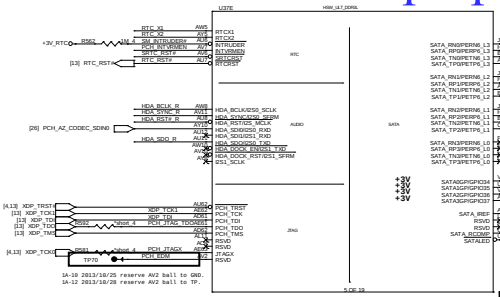

Haswell ULT PCH(LPC,SPI,SMBUS,C-LINK,THERMAL)

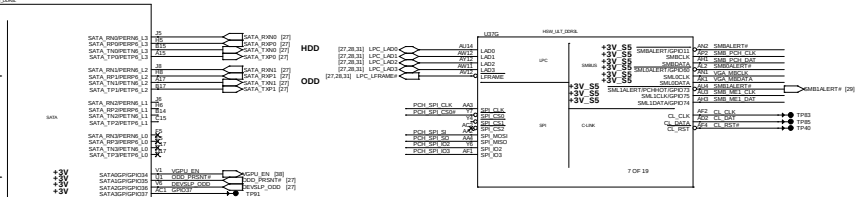

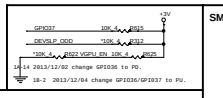

SMBus

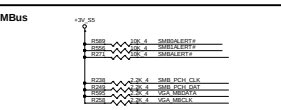

SMBus(PCH)

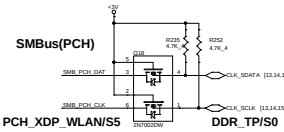

SMBus(EC)

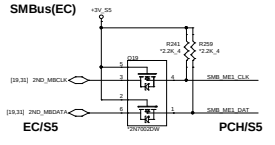

PCH SPI ROM(8M+4M)

15ohm CS01502JB12

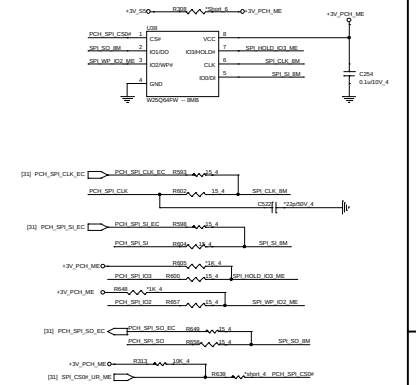

ULT Strapping Table

Pin Name	Strap description	Sampled	Configuration	note
GPIO81(SPKR)	No reboot on TCO Timer expiration	PWROK	**0 = Default enable (iPD 20K)** 1 =Disable No-Reboot mode	+3V R391 10K_4 SPKR — SPKR [10,26]
HDA_SDO	Flash Descriptor Security Override / Intel ME Debug Mode	PWROK	**0 = Default can program ME (iPD 20K)** 1 =can't program ME	HDA_SDO_R R573 *short_4 — ME_WR# [31]
INTVRMEN	Integrated 1.05V VRM enable	ALWAYS	**1=Should be always pull-up**	+3V_RTC R545 330K_4 PCH_INTVRMEN R550 330K_4
GPIO66	Top-Block Swap override		**0 = Default disable (iPD 20K)** 1 = Enable TBS function	[10] GPIO66 — +3V R354 10K_4 GPIO66 R361 *1K_4
GPIO86	Boot BIOS Strap Bit		**0 = Default SPI (iPD 20K)** 1 =LPC	[10] GPIO86 — +3V R363 10K_4 GPIO86 R345 *1K_4
GPIO15	TLS(Transport layer security)		**0 = Default enable w/o confidentiality(iPD 20K)** 1 =Default enable with confidentiality	[10] GPIO15 — +3V_S5 R317 2.2K_4 GPIO15 R307 *1K_4
CFG4	DP presence strap		**0 = Enable an external display port is connected to the eDP** 1 =disable	[6,13] CFG4 — CFG4 R614 *1K_4
DSWVREN	Deep Sx well on die VR enable		**1=Should be always pull-up**	[7] DSWVREN — +3V_RTC R567 330K_4 DSWVREN R562 330K_4

Quanta Computer Inc.

PROJECT : ZRT/ZRTA

Size	Document Number	Rev
	LPT 2/6 (SATA/HDA/SPI)	3A

Date: Wednesday, February 11, 2015 Sheet 8 of 48

Haswell ULT PCH (PCIE,USB3.0,USB2.0)

Laptopblue

1A-6 2013/10/21 reversal PEG lan for layout.
1A-8 2013/10/21 Swap PEG to nomroal mode.

1A-1 2013/10/15 following up acer define and swap USB3 and USB2 USB2 port.

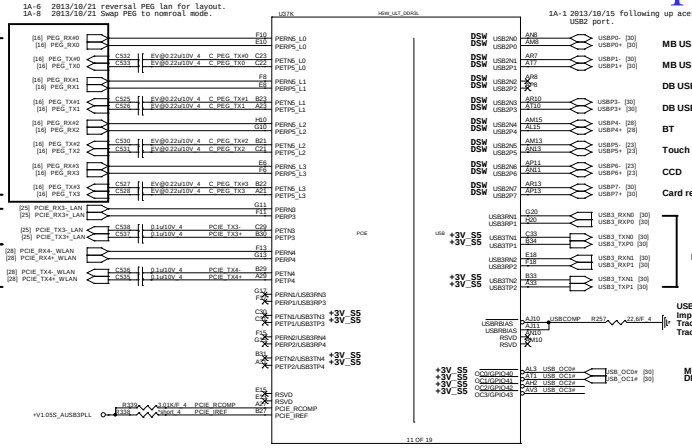

MB USB3.0
MB USB3.0
DB USB2.0
DB USB2.0
BT
Touch screen
CCD
Card reader
MB USB3.0

USBCOMP
Impedance = 50 ohm
Trace length < 500 mils
Trace spacing = 15 mils

MB U3
DB U2

USB Overcurrent

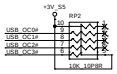

Haswell ULT PCH (CLOCK)

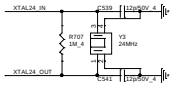

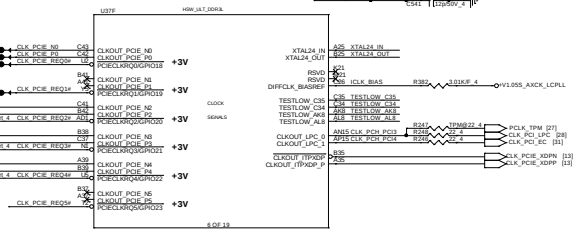

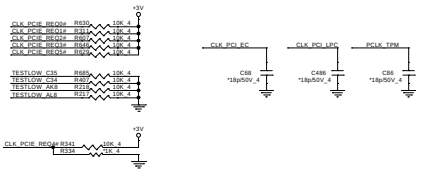

Quanta Computer Inc.			
PROJECT : ZRT/ZRTA			
Size	Document Number		Rev
	LPT 3/6 (PCIE/USB/CLK)		3A
Date: Wednesday, February 11, 2015		Sheet 9 of 44	

Laptopblue

Haswell ULT PCH (GPIO,CPU/MISC,NCTF)

	High	Low
GPIO8	Touch panel	No touch panel

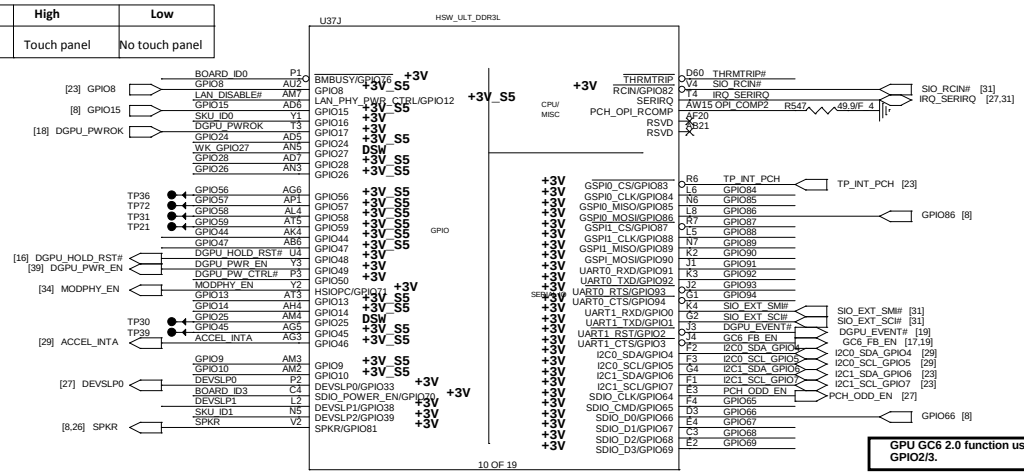

GPU GC6 2.0 function use GPIO2/3.

PCH GPIO PU/PD

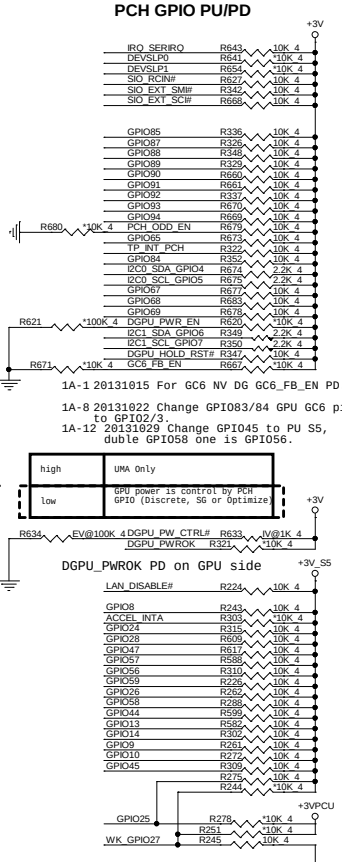

1A-1 20131015 For GC6 NV DG GC6_FB_EN PD.

1A-8 20131022 Change GPIO83/84 GPU GC6 pin to GPIO2/3.

1A-12 20131029 Change GPIO45 to PU S5, duble GPIO58 one is GPIO56.

high	UMA Only
low	GPU power is control by PCH GPIO (Discrete, SG or Optimize)

DGPU_PWROK PD on GPU side

1B-7 20131220 Change +3VPCU to +3V_S5 non deep sx

GPIO27 : If not used then use 8.2-kΩ to 10-kΩ pull-down to GND.

Board ID

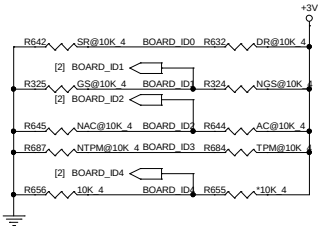

	Low	High
BOARD_ID0	single rank SKU	Dual rank SKU
BOARD_ID1	Reserved (Default)	Reserve
BOARD_ID2	No IOAC	IOAC
BOARD_ID3	No TPM	TPM
BOARD_ID4	Non-Dolly (Default)	Dolly

RAM ID

SKU ID

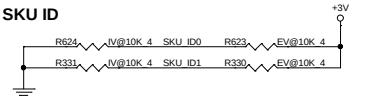

	SKU_ID1	SKU_ID0	VGA H/W Signal	Setup Menu	
UMA Only	0	0	UMA	Hidden	UMA boot
dGPU Only	0	1	GPU	Hidden	GPU boot
Switchable (Mux)	1	0	UMA+GPU	dGPU/SG	UMA boot
Optimize (Muxless)	1	1	UMA	UMA/SG	UMA boot

CPU thermal trip

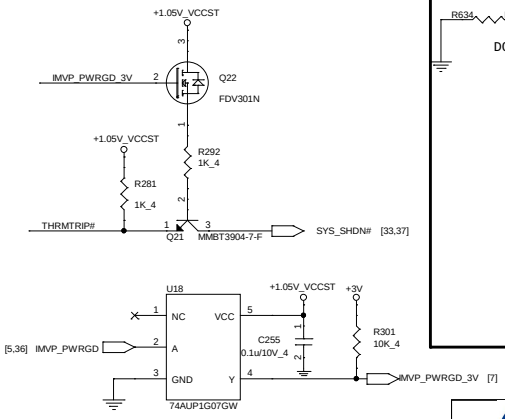

Quanta Computer Inc.

PROJECT : ZRT/ZRTA

Size	Document Number	Rev
	LPT 4/6 (GPIO/MISC)	3A

Date: Wednesday, February 11, 2015 Sheet 10 of 44

Laptopblue

Haswell ULT PCH (Power)

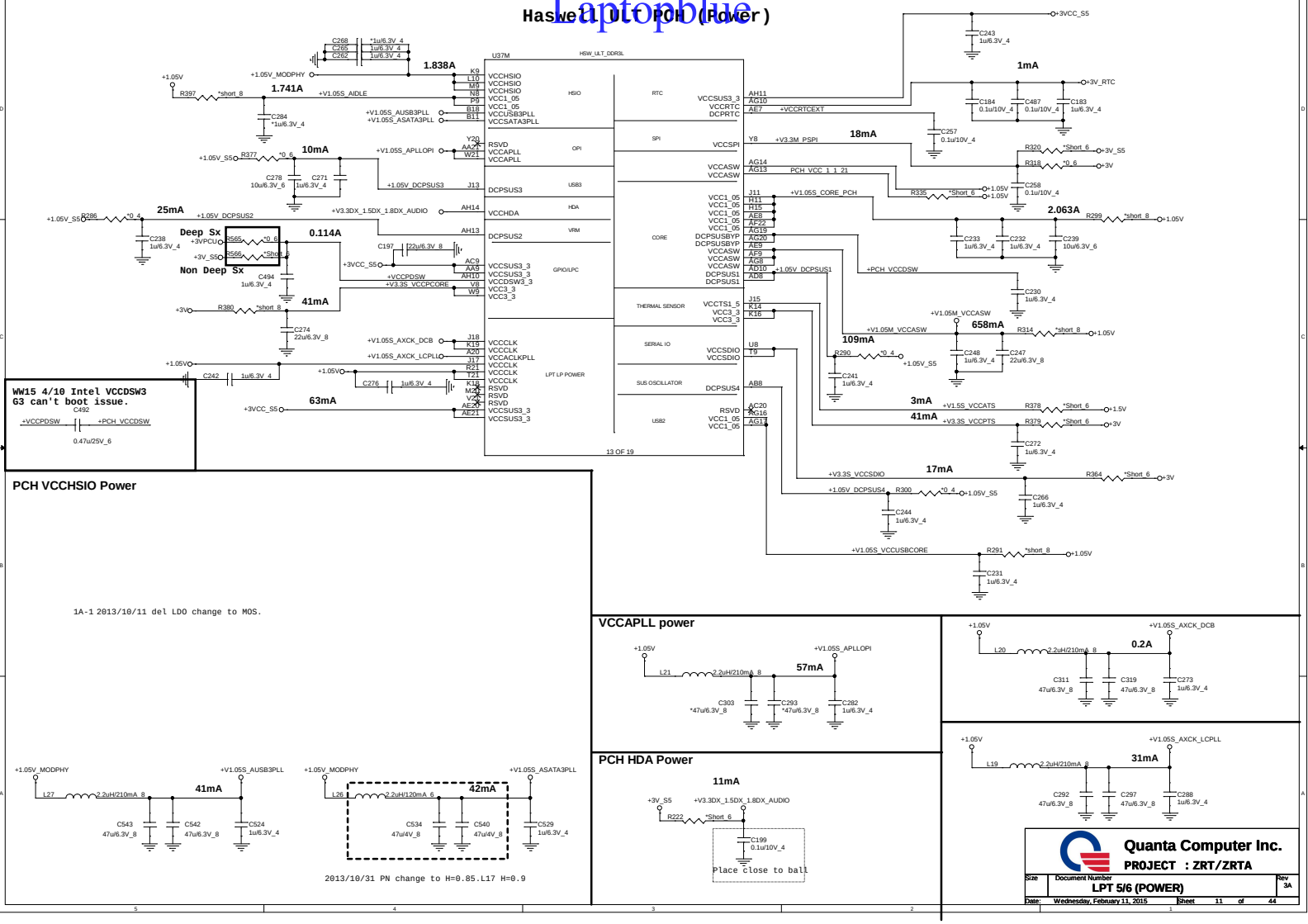

PCH VCCHSIO Power

1A-1 2013/10/11 del LDO change to MOS.

2013/10/31 PN change to H=0.85.L17 H=0.9

VCCAPLL power

PCH HDA Power

Quanta Computer Inc.		
PROJECT : ZRT/ZRTA		
Size	Document Number: LPT 5/6 (POWER)	Rev 3A
Date: Wednesday, February 11, 2015	Sheet 11 of 44	

Laptopblue

Haswell ULT (GND)

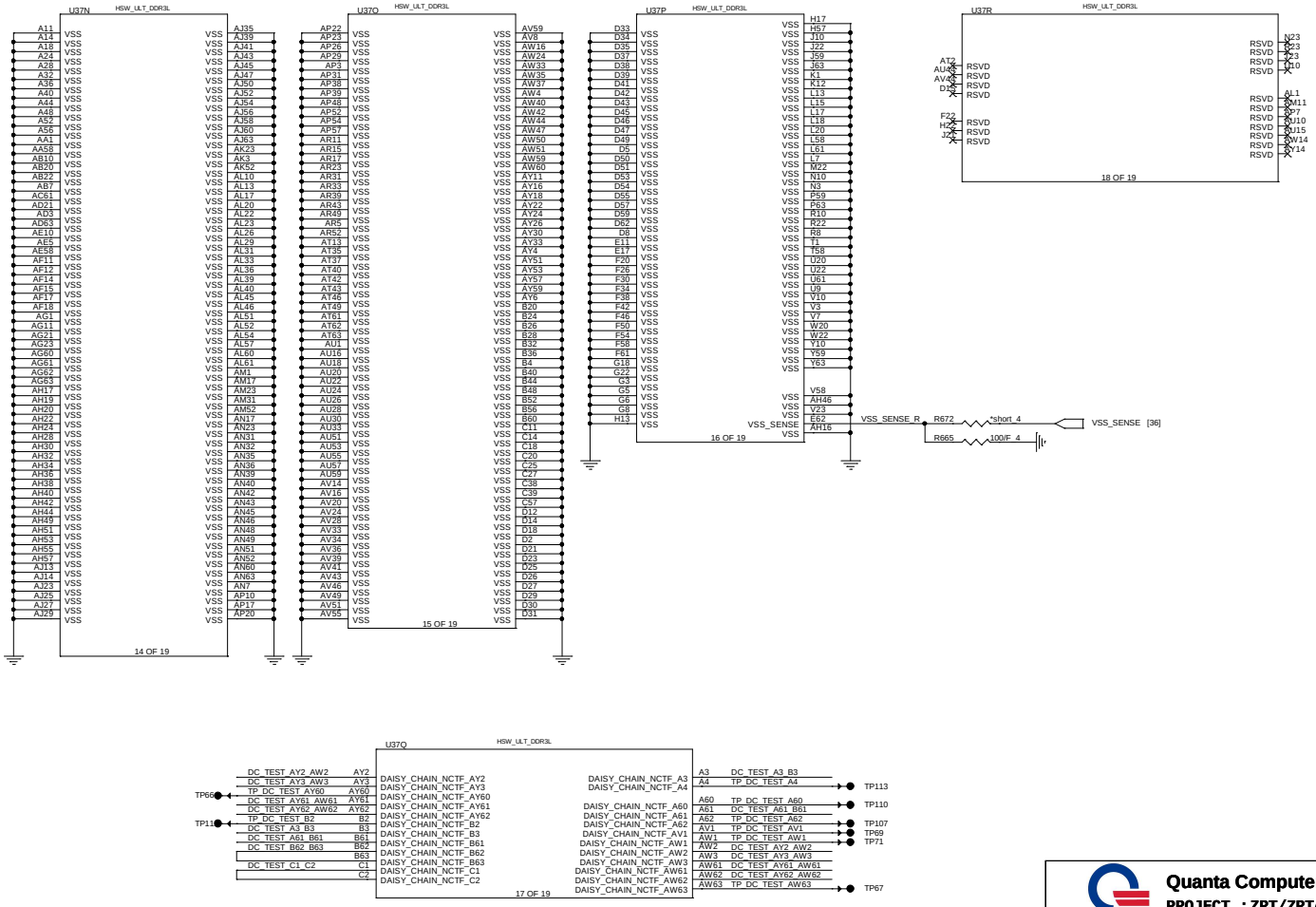

Quanta Computer Inc.

PROJECT : ZRT/ZRTA

Size	Document Number	Rev
	LPT 6/6 (GND)	3A

Date: Wednesday, February 11, 2015 Sheet 12 of 44

Laptopblue

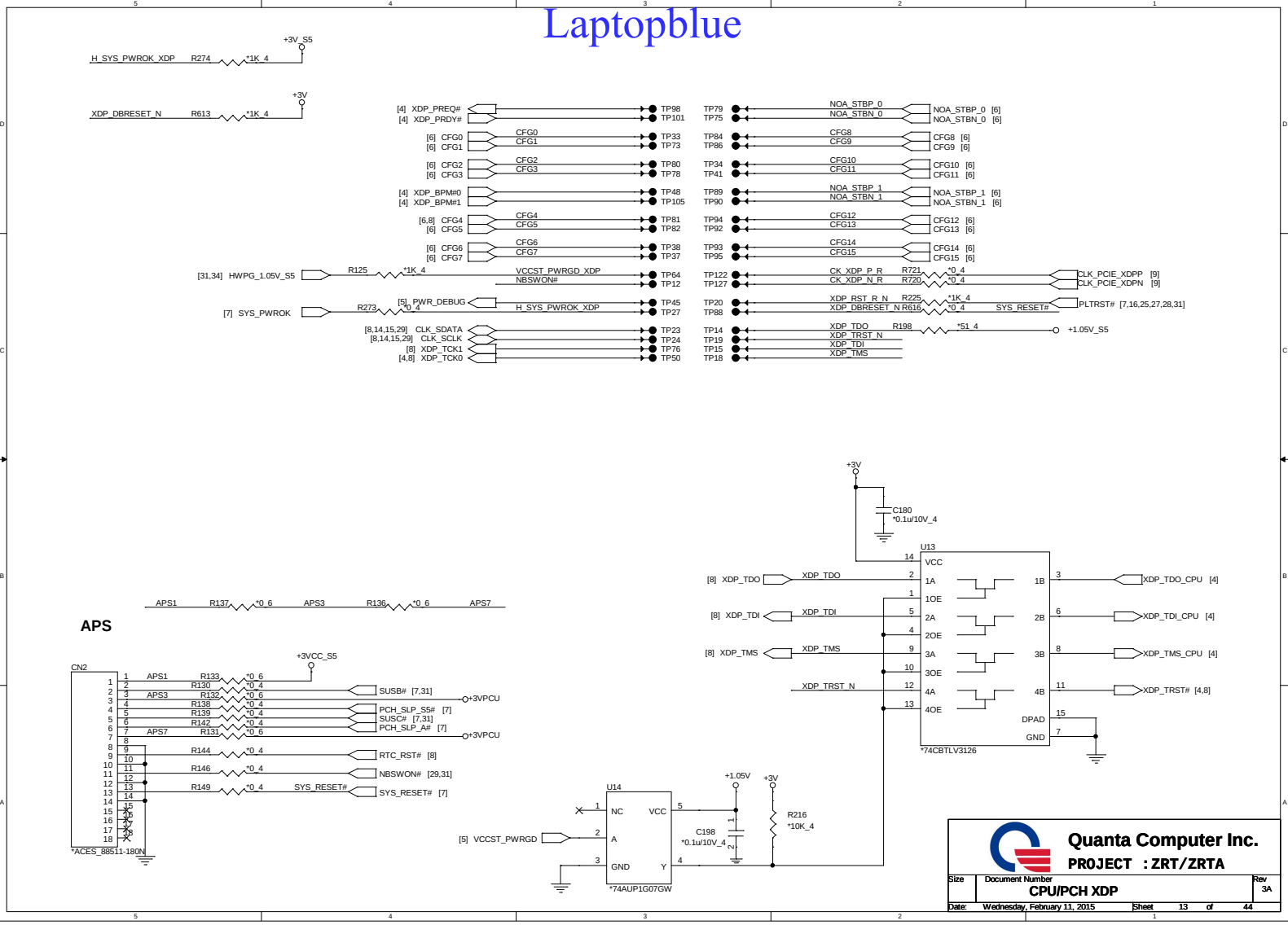

Quanta Computer Inc.

PROJECT : ZRT/ZRTA

Size	Document Number	Rev
	CPU/PCH XDP	3A

Date: Wednesday, February 11, 2015 Sheet 13 of 44

Laptopblue

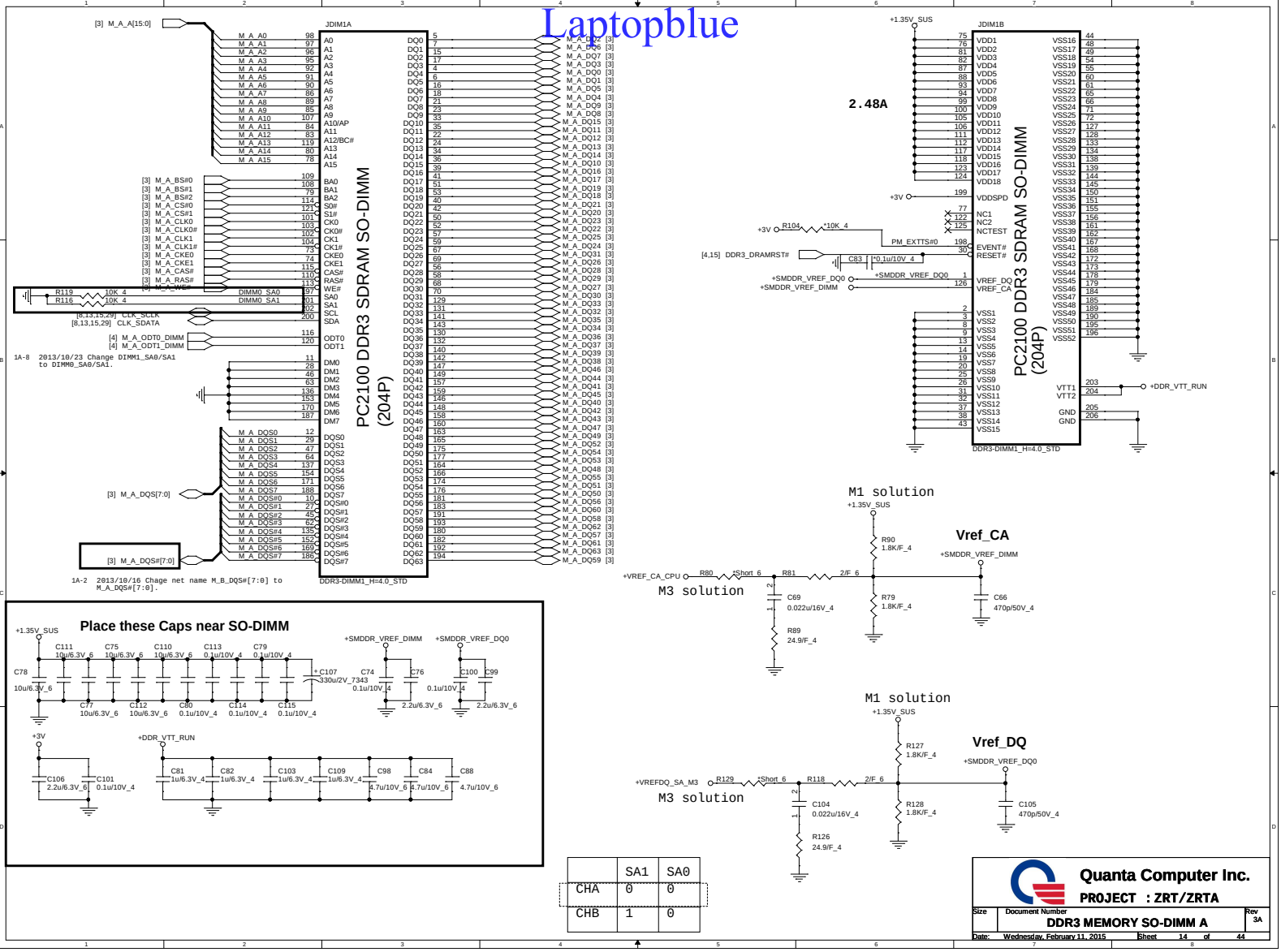

	SA1	SA0
CHA	0	0
CHB	1	0

Quanta Computer Inc.

PROJECT : ZRT/ZRTA

Size	Document Number	Rev
	DDR3 MEMORY SO-DIMM A	3A

Date: Wednesday, February 11, 2015 Sheet 14 of 44

Laptopblue

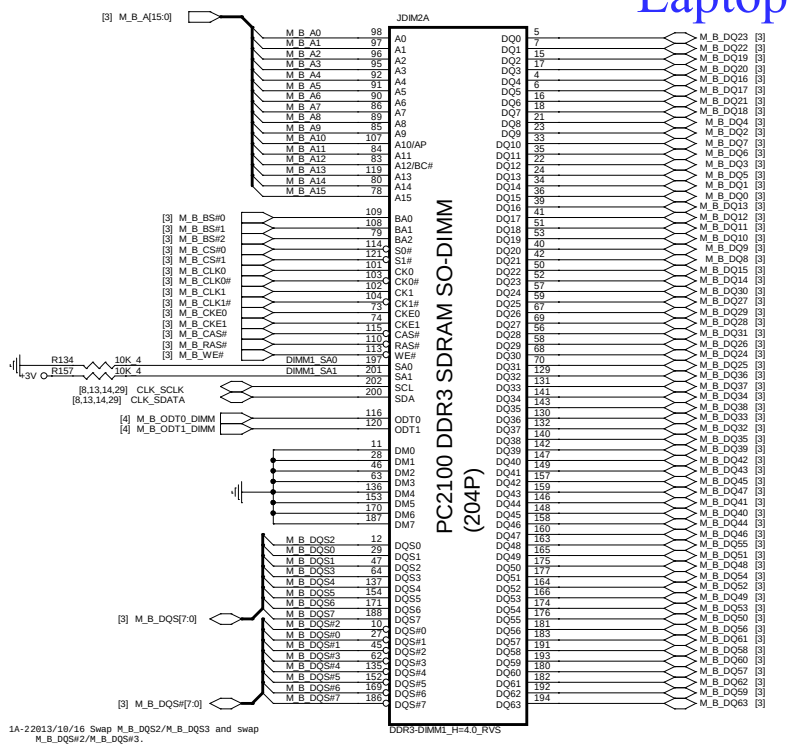

1A-22013/10/16 Swap M_B_DQS2/M_B_DQS3 and swap M_B_DQS#2/M_B_DQS#3.

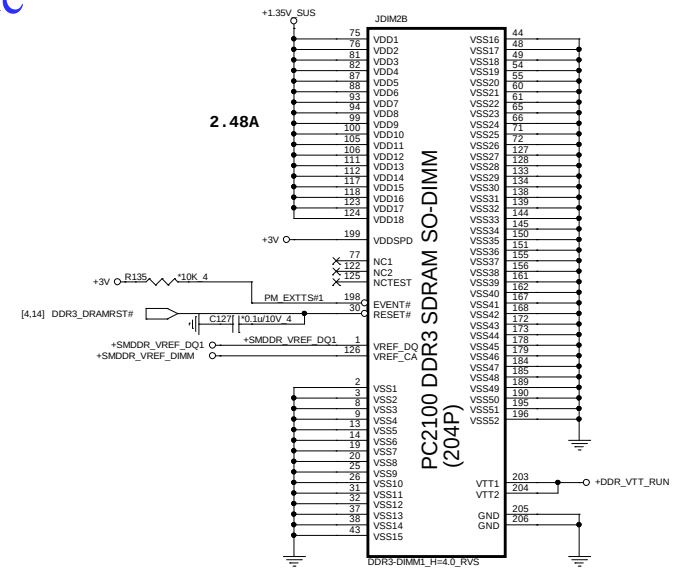

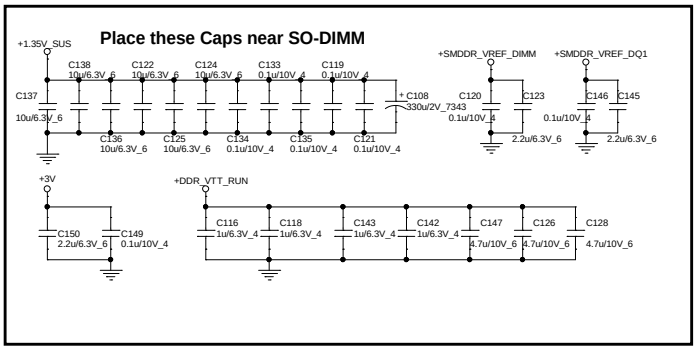

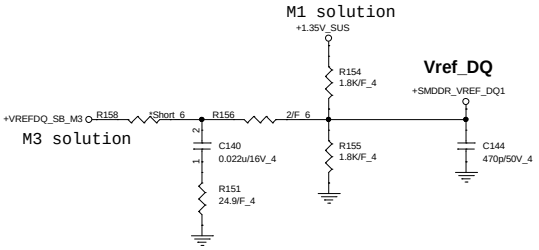

	SA1	SA0
CHA	0	0
CHB	1	0

Quanta Computer Inc.

PROJECT : ZRT/ZRTA

Size	Document Number	Rev
	DDRIII Memory SO-DIMM B	3A

Date: Wednesday, February 11, 2015 Sheet 15 of 44

Laptopblue

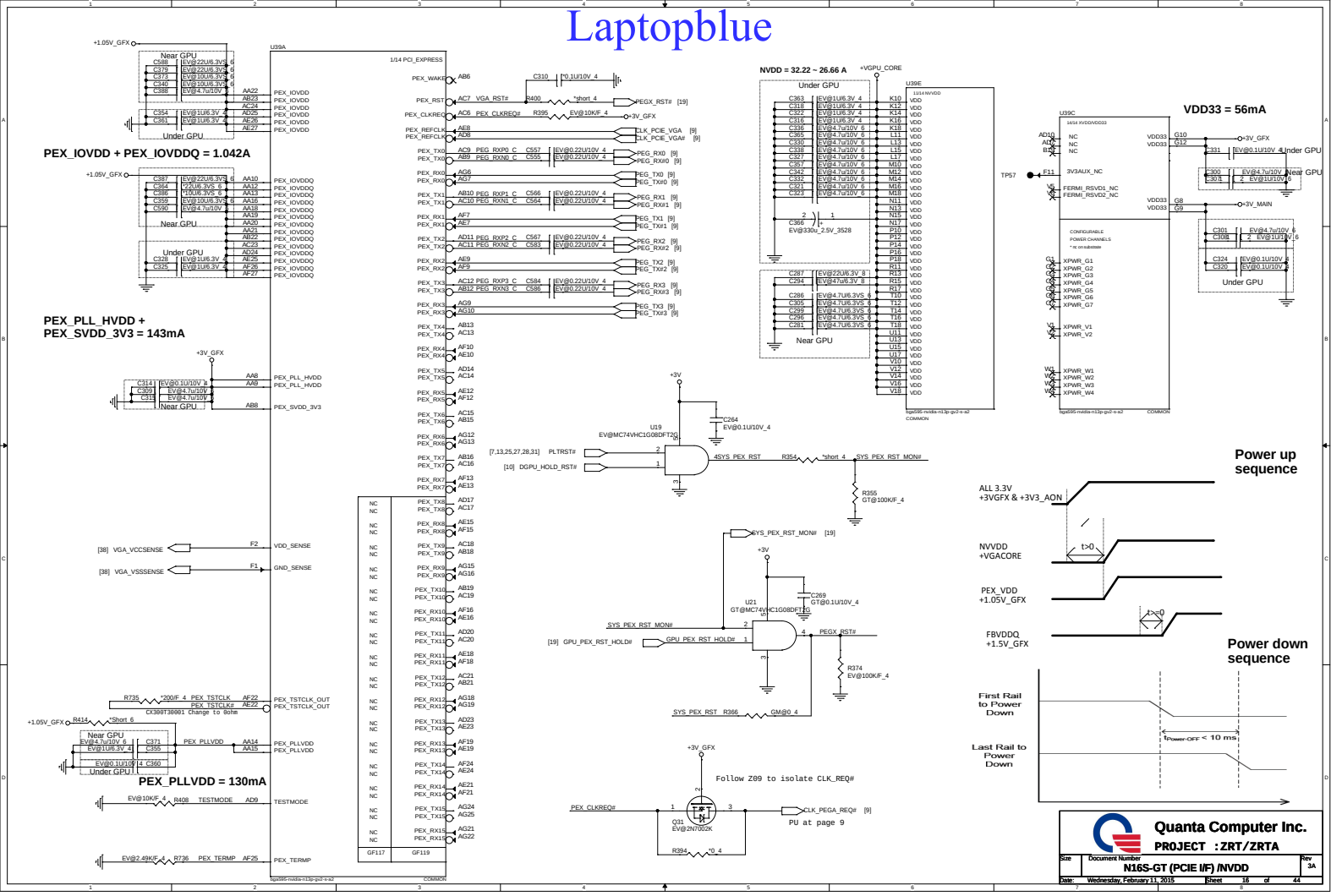
PEX_IOVDD + PEX_IOVDDQ = 1.042A
PEX_PLL_HVDD + PEX_SVDD_3V3 = 143mA
PEX_PLLVDD = 130mA
NVDD = 32.22 ~ 26.66 A
VDD33 = 56mA
Power up sequence
Power down sequence
ALL 3.3V +3VGFX & +3V3_AON
NVVDD +VGACORE
PEX_VDD +1.05V_GFX
FBVDDQ +1.5V_GFX
First Rail to Power Down
Last Rail to Power Down
Follow Z09 to isolate CLK_REQ#
Quanta Computer Inc.
PROJECT : ZRT/ZRTA
N16S-GT (PCIE I/F) /NVDD
Size
Document Number
Rev 3A
Date: Wednesday, February 11, 2015
Sheet 16 of 44

Laptopblue

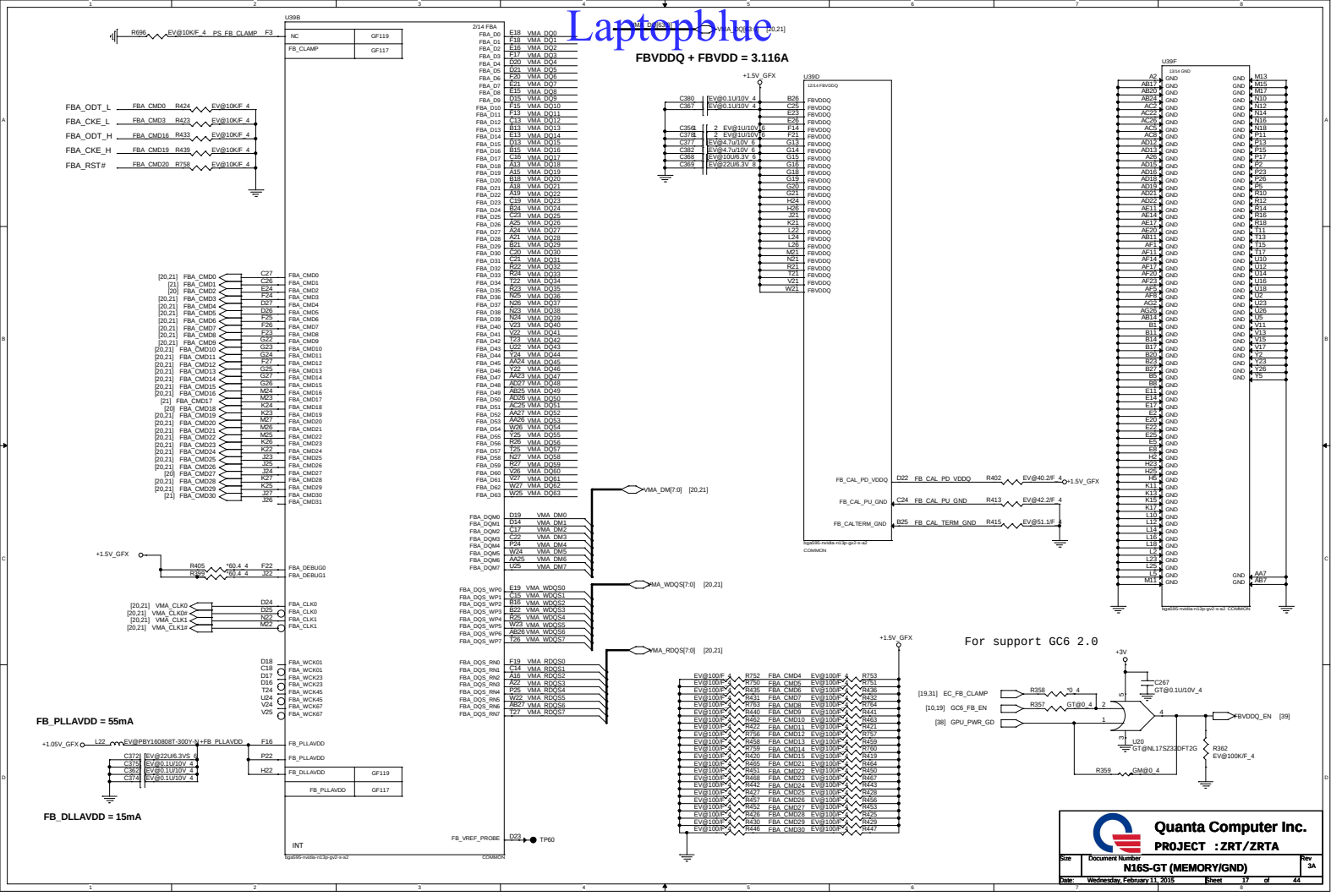

Quanta Computer Inc.	
PROJECT : ZRT/ZRTA	
Size	Document Number: N16S-GT (MEMORY/GND)	Rev 3A
Date: Wednesday, February 11, 2015	Sheet 17 of 44

Laptopblue

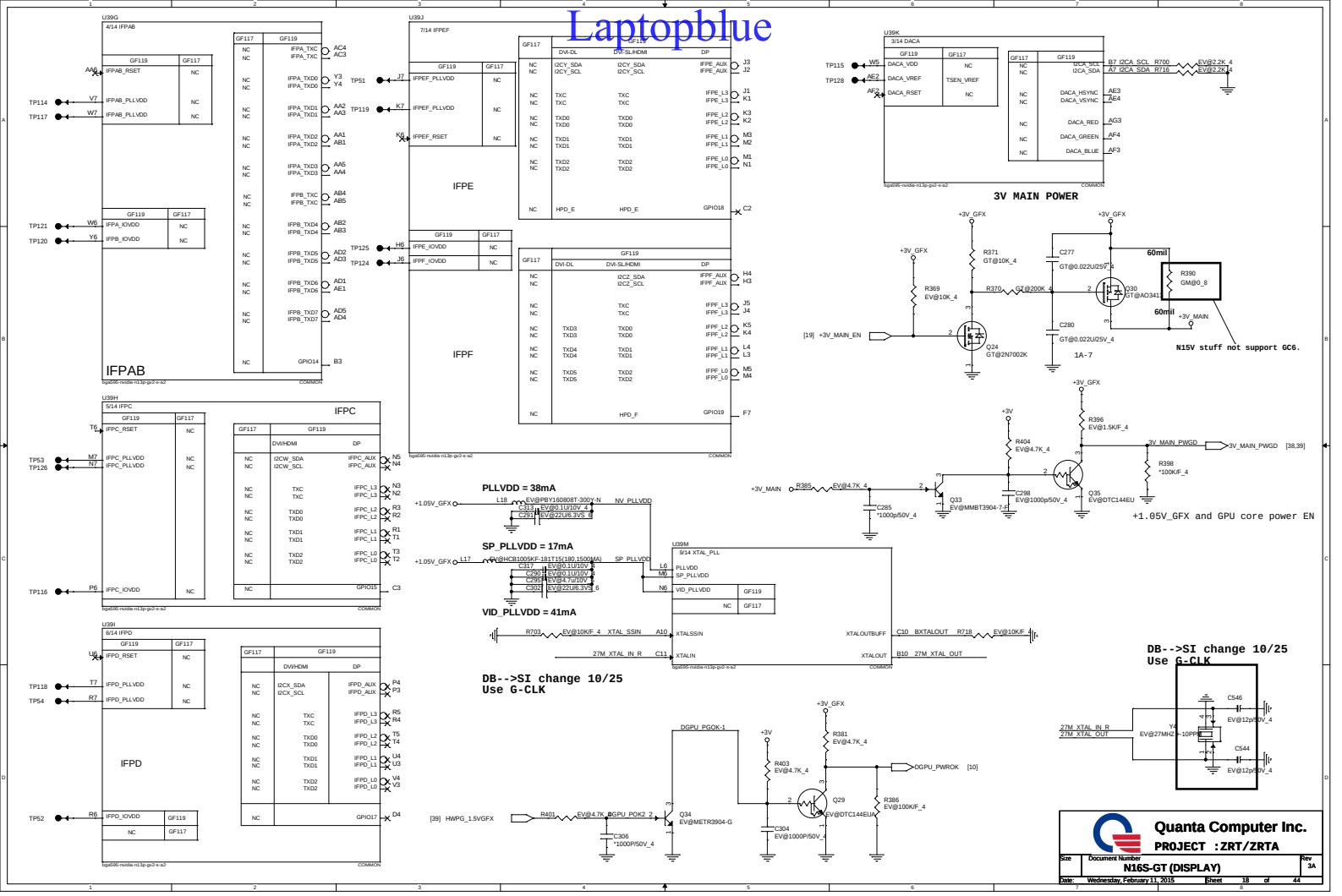
U39G
4/14 IFPAB
IFPAB
U39J
7/14 IFPEF
IFPE
IFPF
U39K
3/14 DACA
3V MAIN POWER
U39H
5/14 IFPC
IFPC
U39I
6/14 IFPD
IFPD
PLLVDD = 38mA
SP_PLLVDD = 17mA
VID_PLLVDD = 41mA
U39M
9/14 XTAL_PLL
DB-->SI change 10/25
Use G-CLK
N15V stuff not support GC6.
+1.05V_GFX and GPU core power EN
Quanta Computer Inc.
PROJECT :ZRT/ZRTA
N16S-GT (DISPLAY)
Size
Document Number
Rev
3A
Date: Wednesday, February 11, 2015
Sheet 18 of 44

Laptopblue

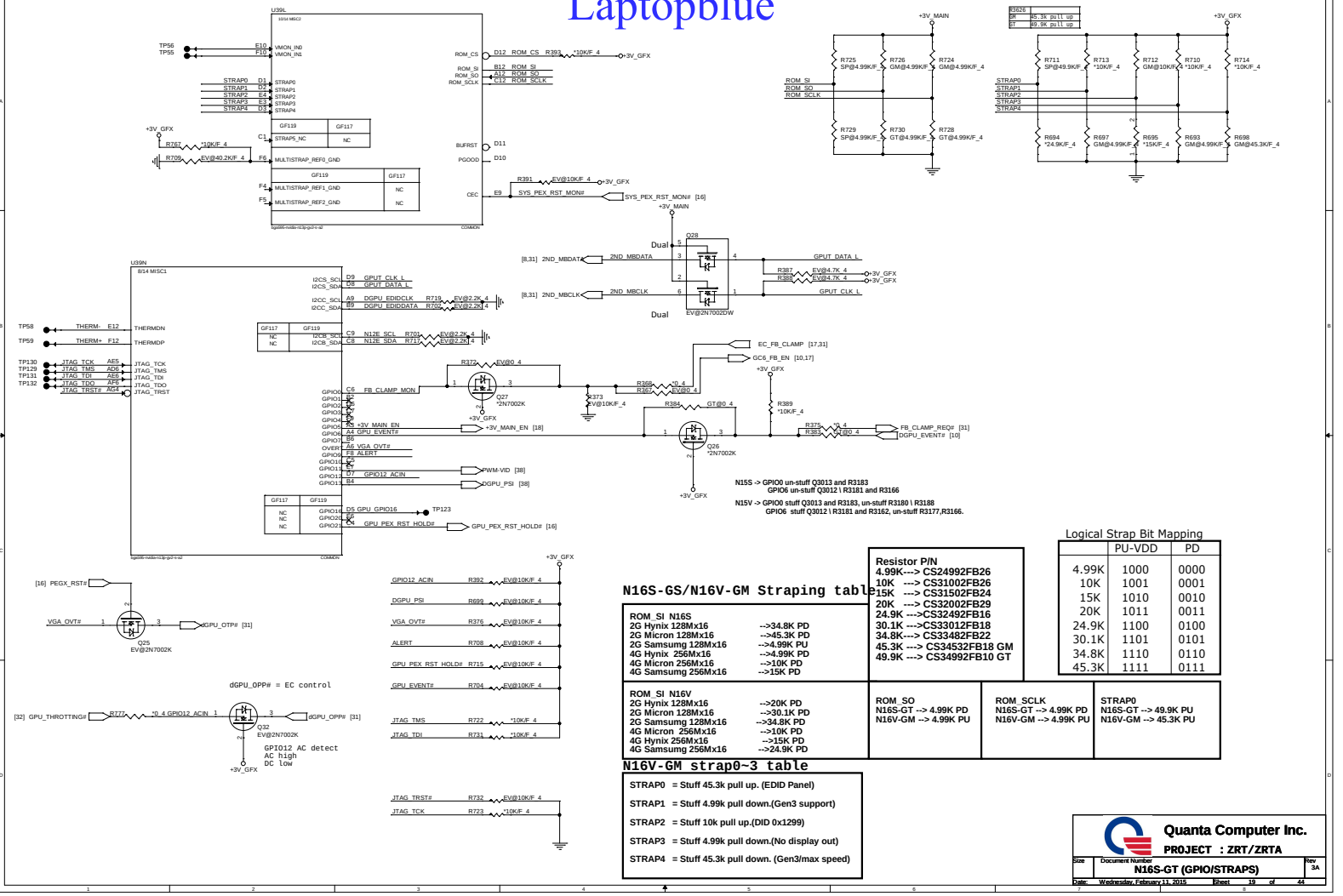

N16S-GS/N16V-GM Straping table

ROM_SI N16S	
2G Hynix 128Mx16	-->34.8K PD
2G Micron 128Mx16	-->45.3K PD
2G Samsumg 128Mx16	-->4.99K PU
4G Hynix 256Mx16	-->4.99K PD
4G Micron 256Mx16	-->10K PD
4G Samsumg 256Mx16	-->15K PD

Resistor P/N
4.99K---> CS24992FB26
10K ---> CS31002FB26
15K ---> CS31502FB24
20K ---> CS32002FB29
24.9K --->CS32492FB16
30.1K --->CS33012FB18
34.8K---> CS33482FB22
45.3K ---> CS34532FB18 GM
49.9K ---> CS34992FB10 GT

Logical Strap Bit Mapping

	PU-VDD	PD
4.99K	1000	0000
10K	1001	0001
15K	1010	0010
20K	1011	0011
24.9K	1100	0100
30.1K	1101	0101
34.8K	1110	0110
45.3K	1111	0111

ROM_SI N16V	**ROM_SO**	**ROM_SCLK**	**STRAP0**
2G Hynix 128Mx16 -->20K PD	N16S-GT --> 4.99K PD	N16S-GT --> 4.99K PD	N16S-GT --> 49.9K PU
2G Micron 128Mx16 -->30.1K PD	N16V-GM --> 4.99K PU	N16V-GM --> 4.99K PU	N16V-GM --> 45.3K PU
2G Samsumg 128Mx16 -->34.8K PD			
4G Micron 256Mx16 -->10K PD			
4G Hynix 256Mx16 -->15K PD			
4G Samsumg 256Mx16 -->24.9K PD			

N16V-GM strap0~3 table

STRAP0 = Stuff 45.3k pull up. (EDID Panel)

STRAP1 = Stuff 4.99k pull down.(Gen3 support)

STRAP2 = Stuff 10k pull up.(DID 0x1299)

STRAP3 = Stuff 4.99k pull down.(No display out)

STRAP4 = Stuff 45.3k pull down. (Gen3/max speed)

Quanta Computer Inc.
PROJECT : ZRT/ZRTA

Size	Document Number	Rev
	N16S-GT (GPIO/STRAPS)	3A

Date: Wednesday, February 11, 2015 Sheet 19 of 44

Laptopblue

HYU 256Mx16, H5TC4G63AFR-11C QBC PN : AKD5PGWTW03---TOP B/S PN : AKD5PZWTW07
MIC 256Mx16, MT41J256M16HA-093G:E QBC PN : AKD5PZSTL01---TOP B/S PN : AKD5PZSTL00
SAM 256Mx16, K4W4G164QD-BC1A QBC PN : AKD5PGWTS01---TOP B/S PN : AKD5PGWTS02

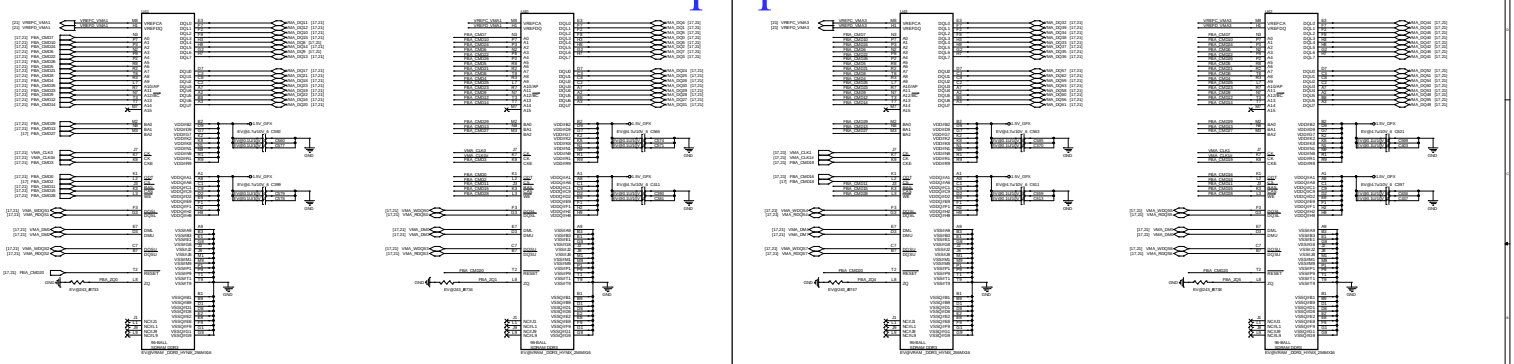

162_1% ohm CS11622FB07 RES CHIP 162 1/16W +-1%(0402)
CS11622FB15 RES CHIP 162 1/16W +-1%(0402)

FOR EMI Request

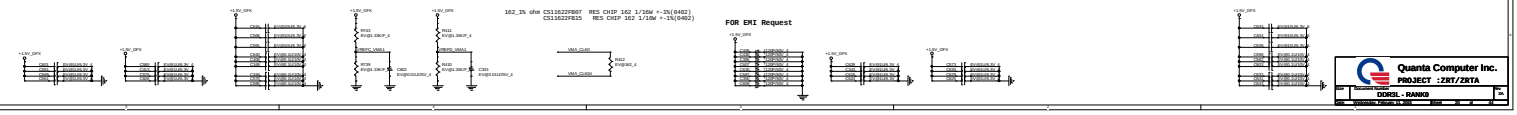

Quanta Computer Inc.
PROJECT :ZRT/ZRTA
Secured Network
DDR3L - RANK0
Size: A3 Date: Wednesday, February 19, 2014 Sheet 20 of 40 Rev: 3A

Laptopblue

HYU 256Mx16, H5TC4G63AFR-11C QDC PN : AKD5PGWTW00---TOP B/S PN : AKD5PZSTW07
MIC 256Mx16, MT41J256M16HA-093:E QDC PN : AKD5PZSTL01---TOP B/S PN : AKD5PZSTL02
SAM 256Mx16, K4W4G1646D-BC1A QDC PN : AKD5PGWTS02---TOP B/S PN : AKD5PGWTS02

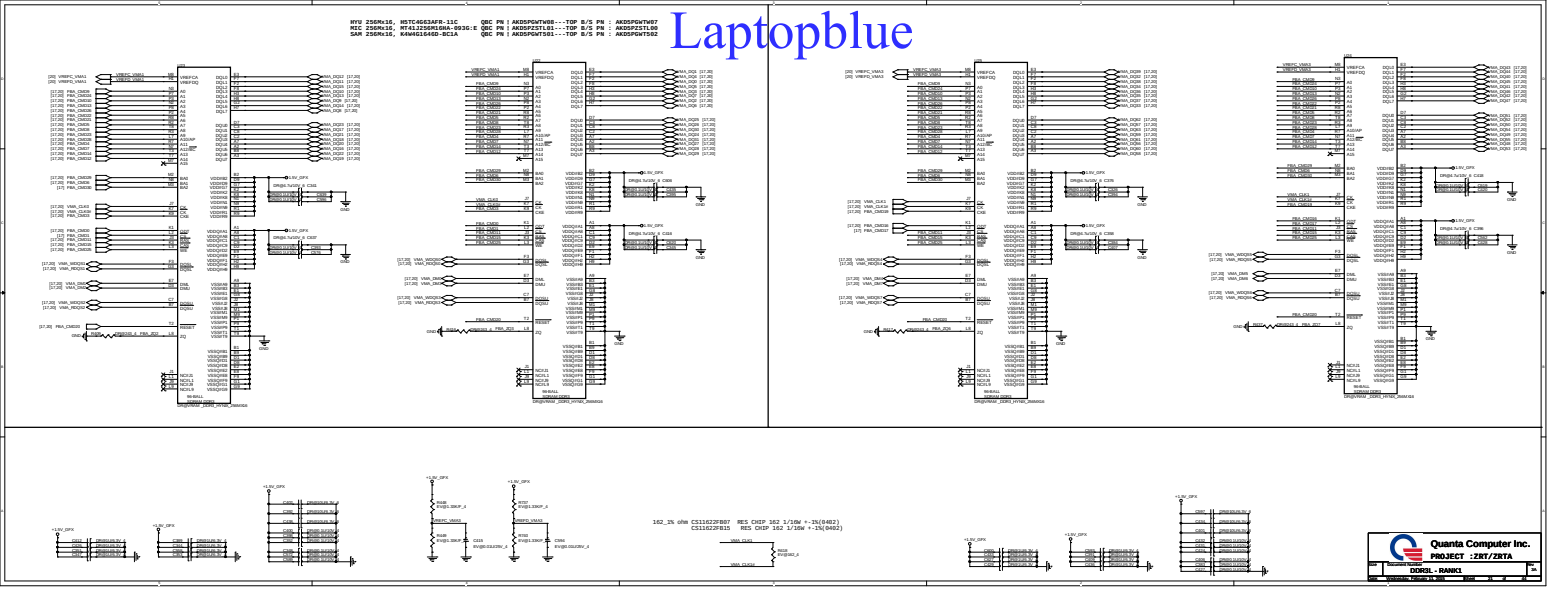

Quanta Computer Inc.
PROJECT :ZRT/ZRTA
Size Document Number Rev
DDR3L - RANK1
Date: Wednesday, February 19, 2014 Sheet 16 of 40

Laptopblue

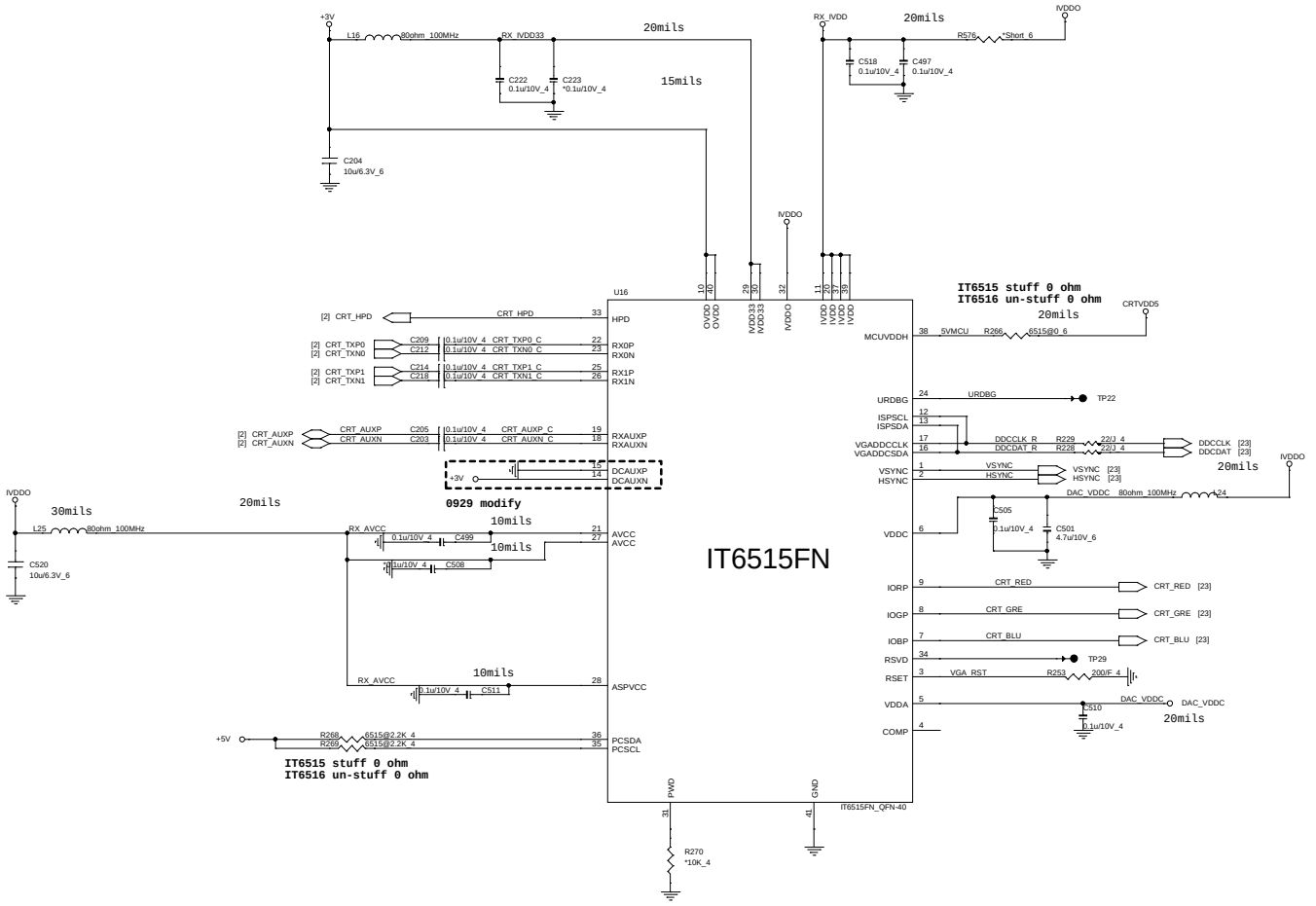

Quanta Computer Inc.

PROJECT : ZRT/ZRTA

Size	Document Number	Rev
	DP to VGA IT6165	3A

Date: Wednesday, February 11, 2015 Sheet 22 of 44

Laptopblue

CRT

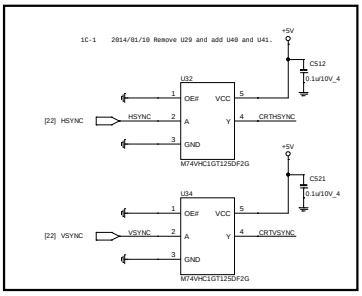

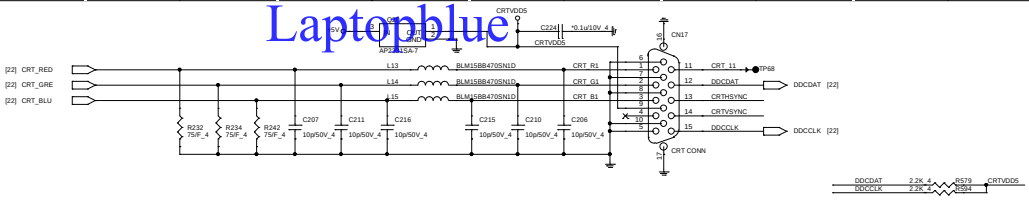

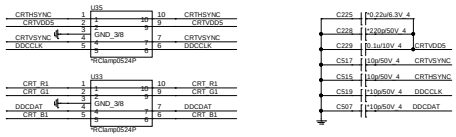

Power trace tracking

[2,5,7,8,9,10,11,13,14,15,16,17,18,22,24,25,26,27,28,29,30,31,33,34,35,36,37,38,39] +3V
[22,24,26,27,29,33,37] +5V
[7,8,10,11,13,25,26,27,28,29,31,32,33,37,38,39] +3VPCU
[27,29,32,33,34,35,36,37,38,39] VIN

LCD CONNECTOR

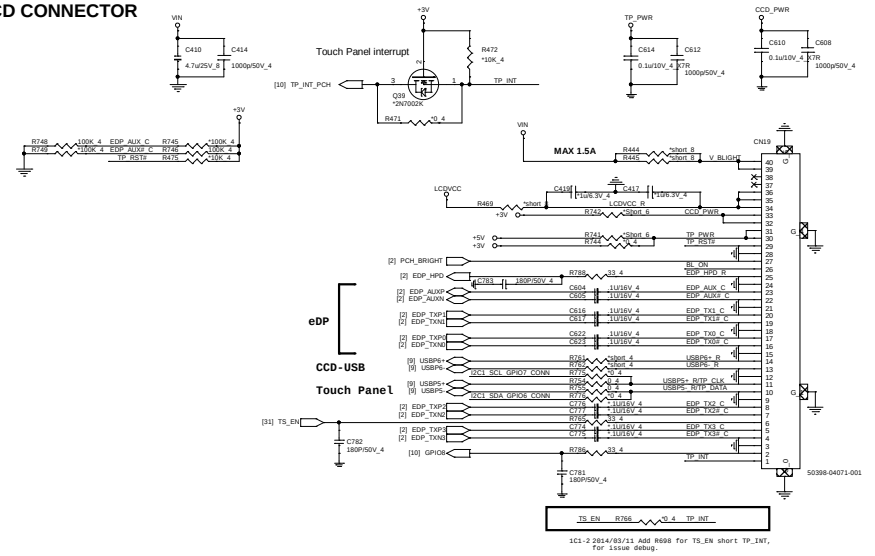

LCD Power

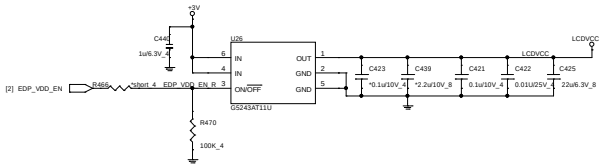

Touch screen level shift I2C(reserve)

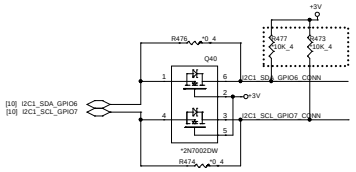

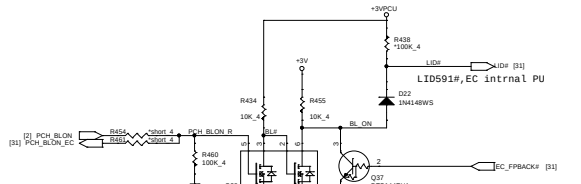

Hall Sensor (HSR)

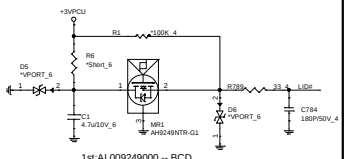

1st:AL009249000 -- BCD
2nd:AL009132001 -- ANC

Quanta Computer Inc.			
PROJECT : ZRT/ZRTA			
Size	Document Number		Rev
	CRT/LVDS/CAMERA/LID		1A
Date: Wednesday, February 11, 2015	Sheet 23 of 44		

Laptopblue

HDMI

From PCH

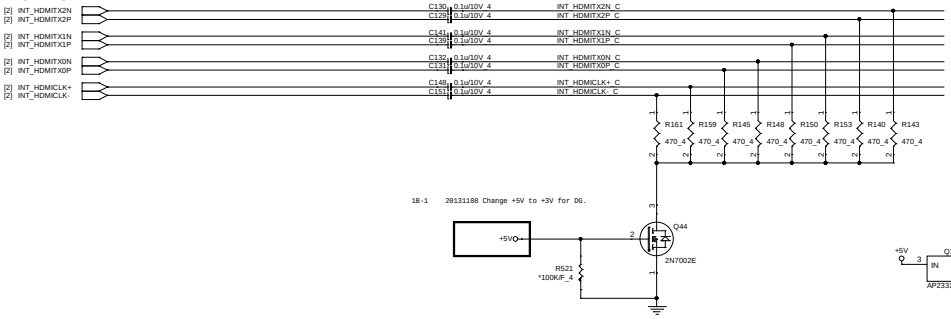

1B-1 20131108 Change +5V to +3V for DG.

HDMI connector

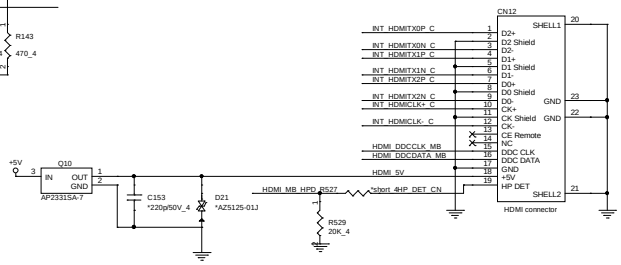

HDMI-detect

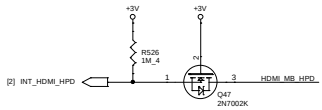

I2C

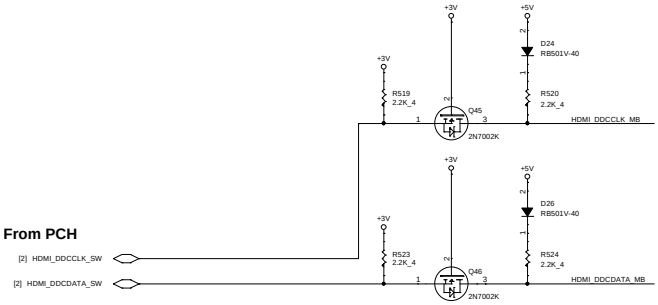

EMI

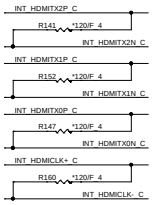

Power trace tracking

[2,5,7,8,9,10,11,13,14,15,16,17,18,22,23,25,26,27,28,29,30,31,33,34,35,36,37,38,39] +3V
[22,23,26,27,29,33,37] +5V

Quanta Computer Inc.		
PROJECT : ZRT/ZRTA		
Size	Document Number: HDMI (PS8101)	Rev 1A
Date: Wednesday, February 11, 2015	Sheet 24 of 44	

Laptopblue

LAN

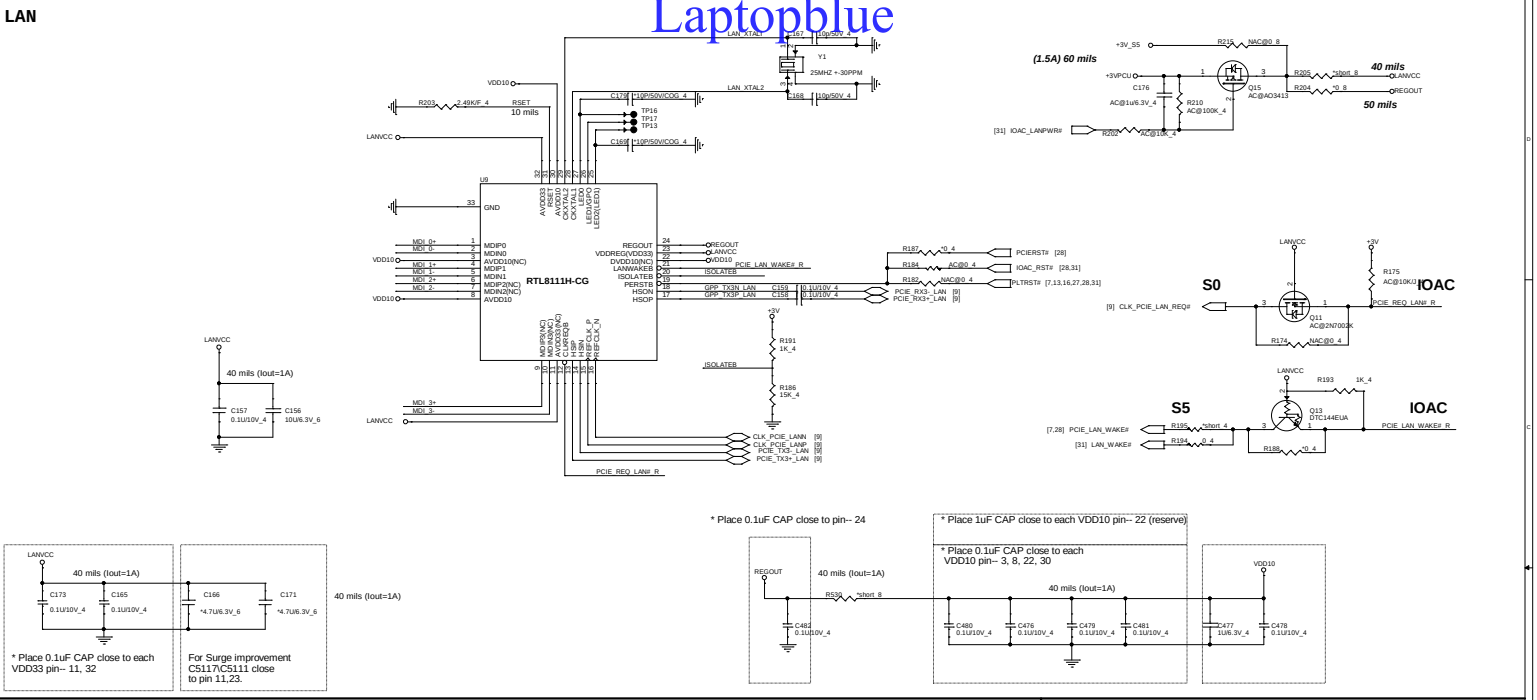

Tramsformer

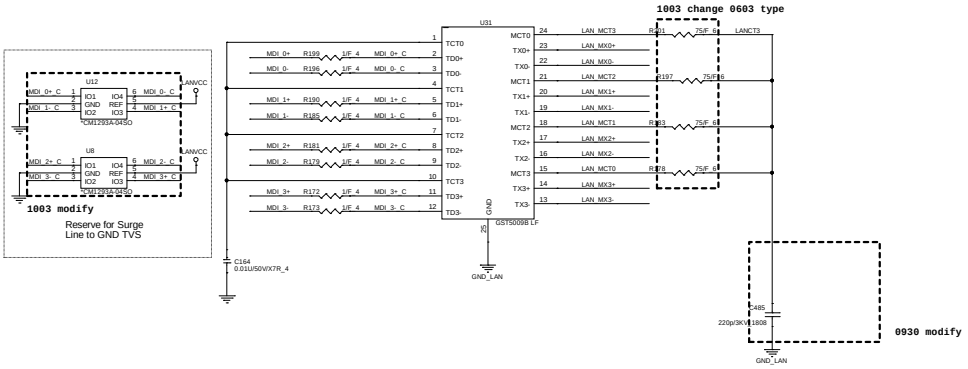

RJ45 Connector

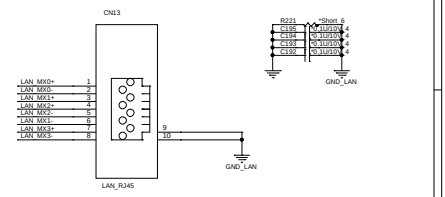

Power trace tracking

[2,5,7,8,9,10,11,13,14,15,16,17,18,22,23,24,26,27,28,29,30,31,33,34,35,36,37,38,39] +3V
[5,7,8,9,10,11,13,27,29,31,33,36,38] +3V_S5
[7,8,10,11,13,23,26,27,28,29,31,32,33,37,38,39] +3VPCU

Quanta Computer Inc.

PROJECT :ZRT/ZRTA

Size	Document Number	Rev
	LAN (RTL8111GS)	1A

Date: Wednesday, February 11, 2015 Sheet 25 of 44

Laptopblue

Codec(ADO)

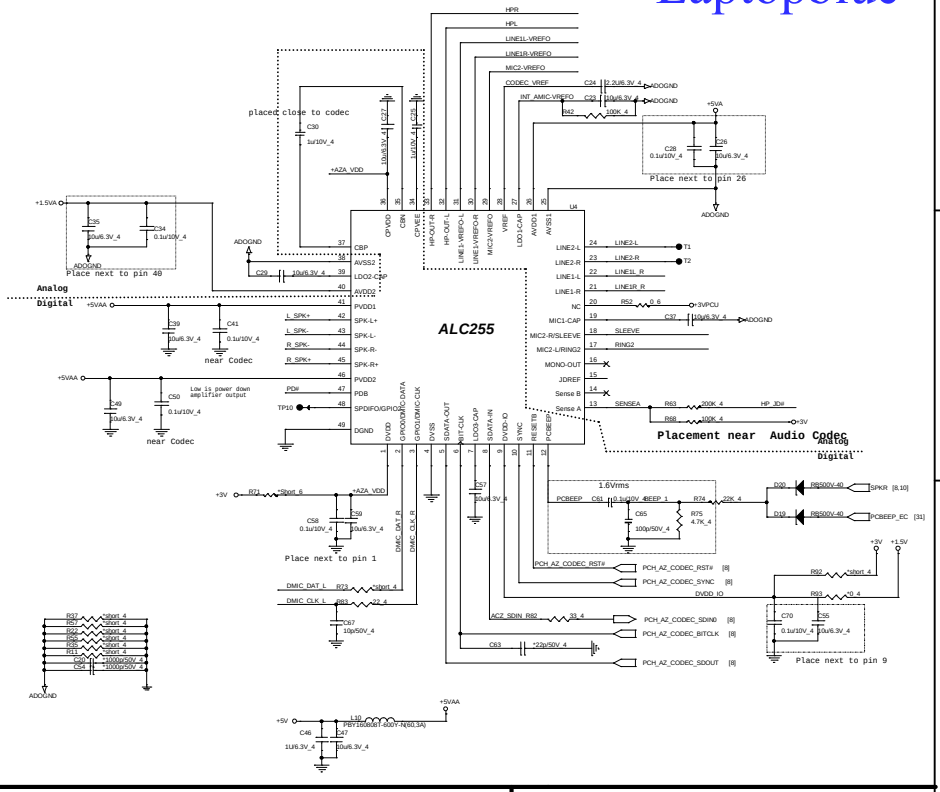

Grounding circuit(ADO)

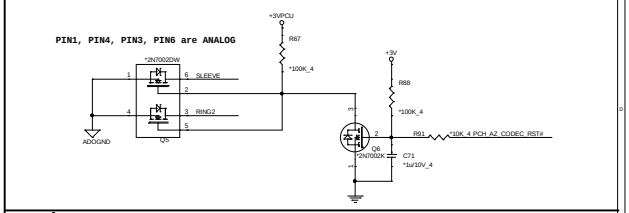

D-Mic

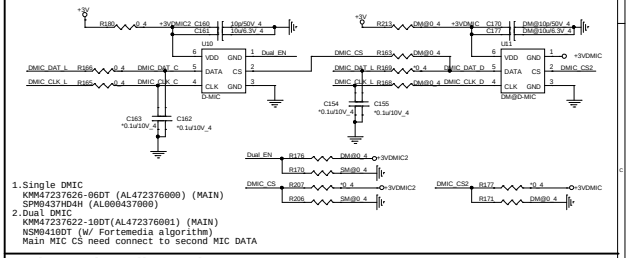

1.Single DMIC
KMM47237626-06DT (AL472376000) (MAIN)
SPM0437HD4H (AL000437000)
2.Dual DMIC
KMM47237622-10DT(AL472376001) (MAIN)
NSM0410DT (W/ Fortemedia algorithm)
Main MIC CS need connect to second MIC DATA

Universal Audio Jack

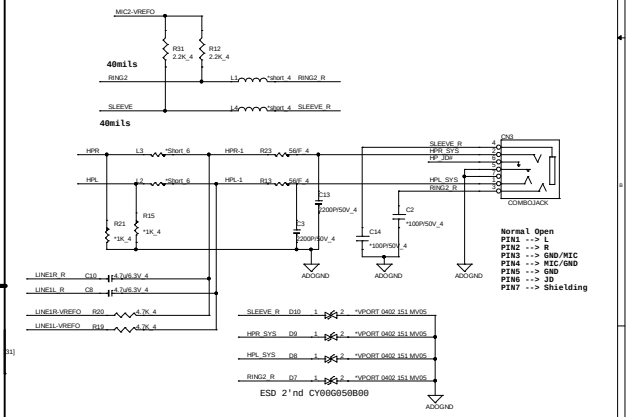

Codec PWR 5V(ADO)

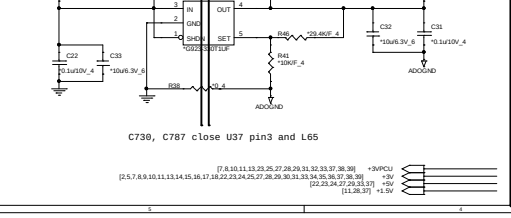

Mute(ADO)

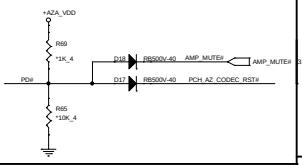

Internal Speaker

40mil for each signal

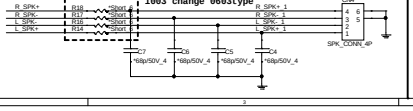

Codec PWR 3V/1.5V(ADO)

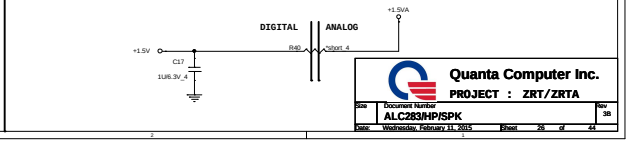

Quanta Computer Inc.
PROJECT : ZRT/ZRTA

Size	Document Number	Rev
	ALC283/HP/SPK	3B
Date: Wednesday, February 11, 2015	Sheet 26 of 44	

Laptopblue

2.5" SATA HDD (HDD)

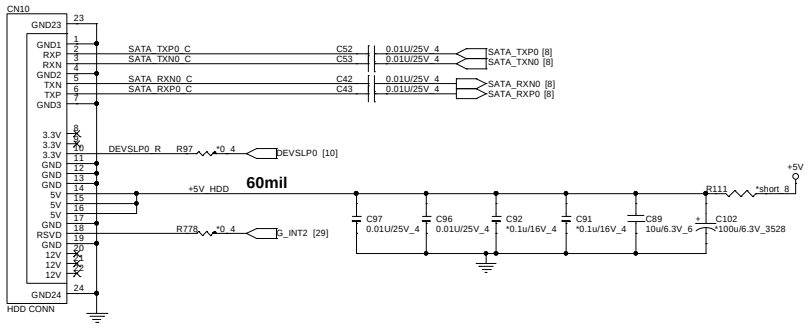

SATA ODD Connector(ODD)

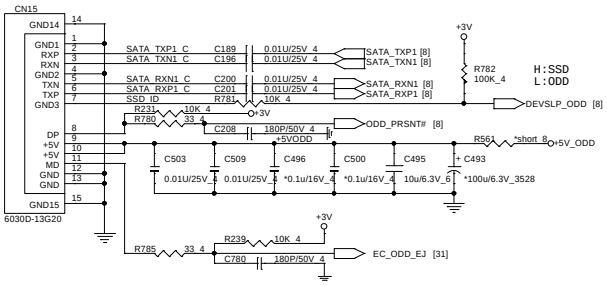

ODD Power (ODD)

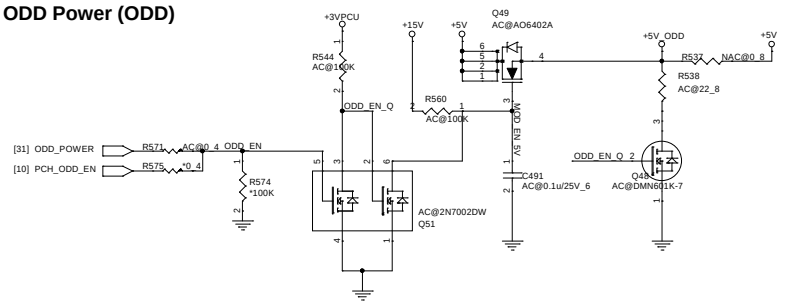

EMI

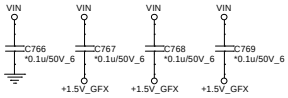

TPM NPCT650 (TPM)

TPMM 1.2	AL000655K01
TPMM 2.0	AL000650K01

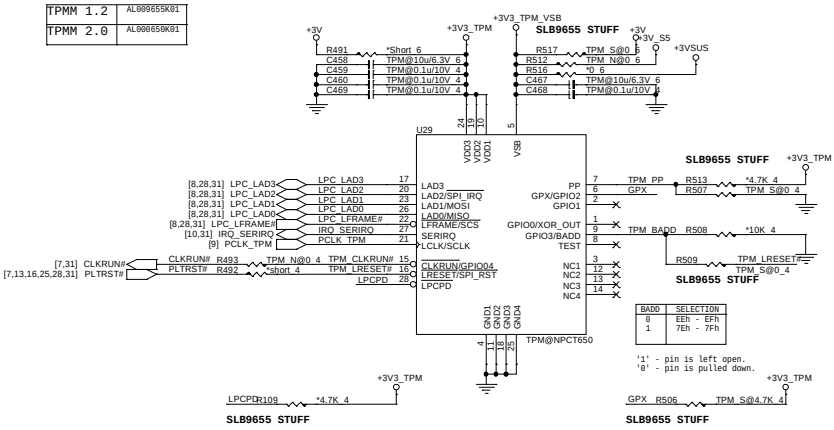

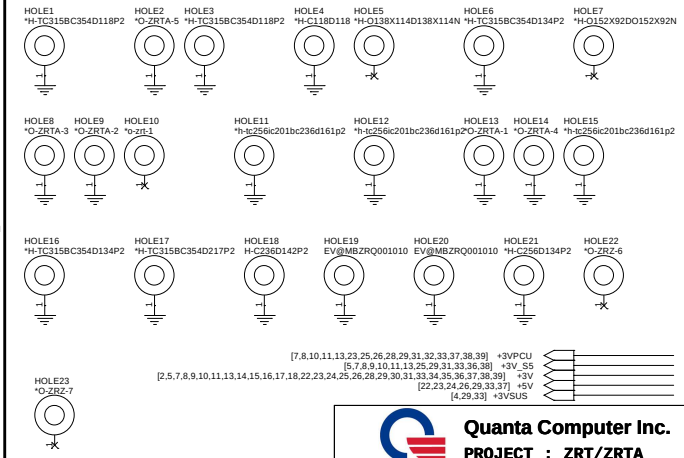

Quanta Computer Inc.

PROJECT : ZRT/ZRTA

Size	Document Number	Rev
	HDD/ODD/TPM NPCT650	1A

Date: Wednesday, February 11, 2015 Sheet 27 of 44

NGFF WiFi & BT (NGF)

Laptopblue

[7,8,10,11,13,23,25,26,27,29,31,32,33,37,38,39] +3VPCU
[11,26,37] +1.5V
[2,5,7,8,9,10,11,13,14,15,16,17,18,22,23,24,25,26,27,29,30,31,33,34,35,36,37,38,39] +3V

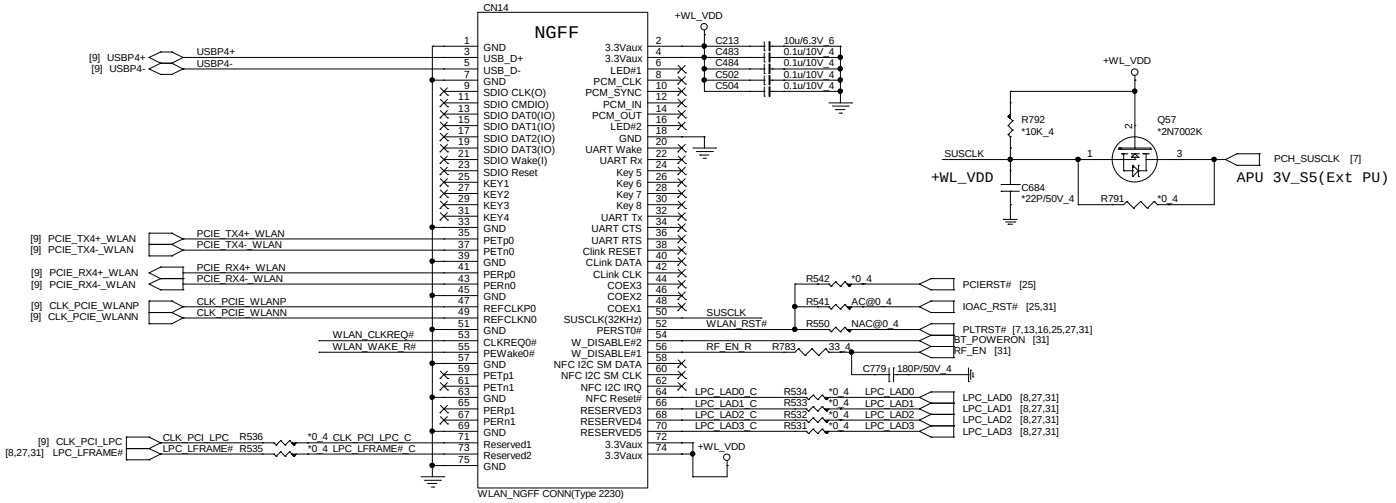

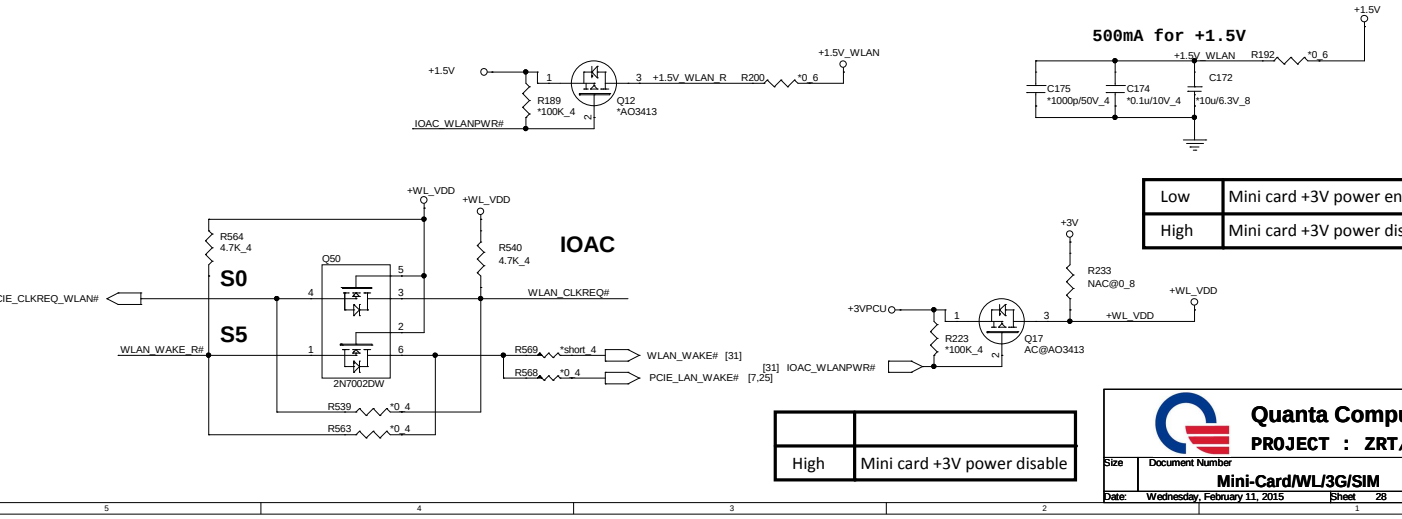

Low	Mini card +3V power enable
High	Mini card +3V power disable

High	Mini card +3V power disable

Quanta Computer Inc.
PROJECT : ZRT/ZRTA

Size	Document Number	Rev
	Mini-Card/WL/3G/SIM	1A

Date: Wednesday, February 11, 2015 Sheet 28 of 44

Laptopblue

K/B (KBC)

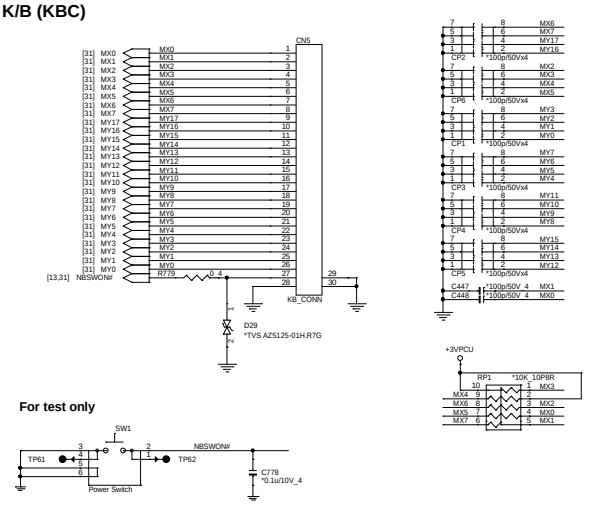

TOUCHPAD BOARD CONN(TPD I2C/PS2 co-lay)

TPD->100kHz,TS=400Khz
Intel design guide suggestion
MCP PIN 10u.
Per inch 3u TS=3x5inch
400kHz10-100u =2.4-0.4k.
100Khz 10~100u=9k~1k.

1006 Del

1006 add

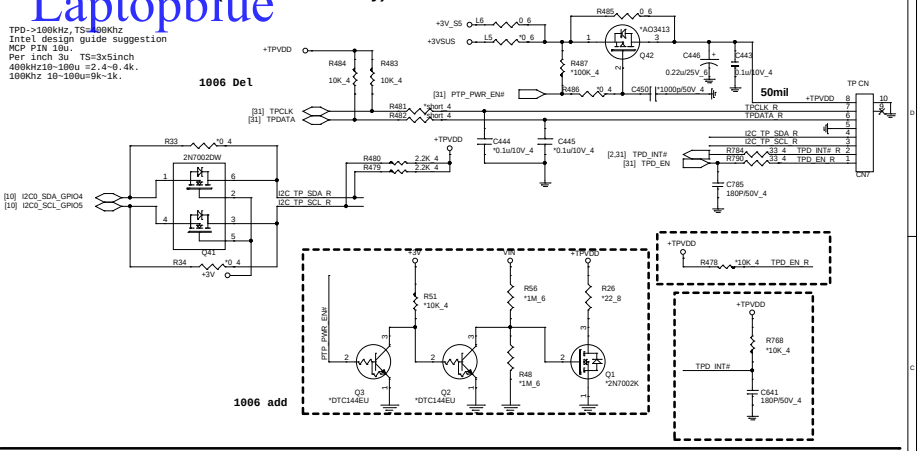

CPU FAN (THM)

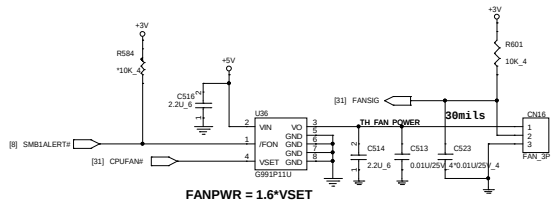

KB_BL LED (KBL)

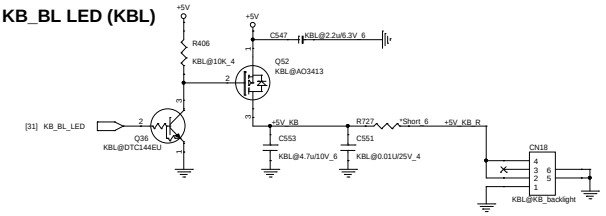

G-sensor(ACS)

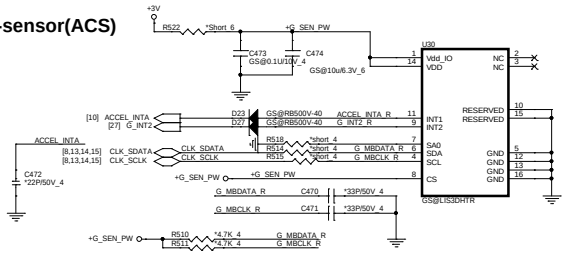

POWER LED(UIF)

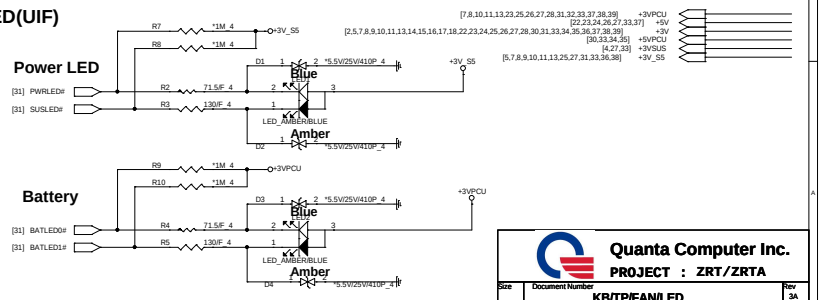

Quanta Computer Inc.	
PROJECT : ZRT/ZRTA	
Size / Document Number	KB/TP/FAN/LED
Rev	3A
Date: Wednesday, February 11, 2015	Sheet 29 of 44

Laptopblue

USB 3.0 Connector(UB3)

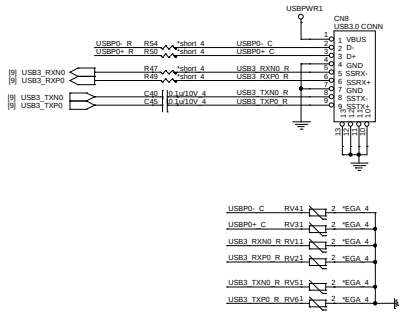

USB Charger for USB3.0 Port0 (UBC)

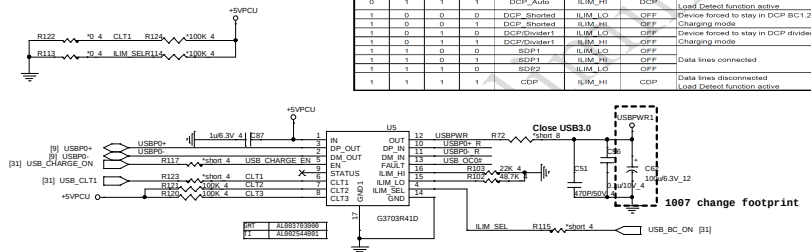

Table 2. Truth Table

CTL1	CTL2	CTL3	ILIM_SEL	MODE	Current Limit Setting	Status Output	Notice
0	0	0	0	Discharge	NA	OFF	
0	0	0	1	Discharge	NA	OFF	OUT held low
0	0	1	0	DCP_Auto	ILIM_HI	OFF	Data lines disconnected
0	0	1	1	DCP_Auto	ILIM_HI	DCP	Data lines disconnected Load Detect function active
0	1	0	0	SDP1	ILIM_LO	OFF	Data lines connected
0	1	0	1	SDP1	ILIM_HI	OFF	
0	1	1	0	DCP_Auto	ILIM_LO	OFF	Data lines disconnected
0	1	1	1	DCP_Auto	ILIM_HI	DCP	Data lines disconnected Load Detect function active
1	0	0	0	DCP_Shorted	ILIM_LO	OFF	Device forced to stay in DCP BC1.2
1	0	0	1	DCP_Shorted	ILIM_HI	OFF	Charging mode
1	0	1	0	DCP/Divider1	ILIM_LO	OFF	Device forced to stay in DCP divider1
1	0	1	1	DCP/Divider1	ILIM_HI	OFF	Charging mode
1	1	0	0	SDP1	ILIM_LO	OFF	
1	1	0	1	SDP1	ILIM_HI	OFF	Data lines connected
1	1	1	0	SDP2	ILIM_LO	OFF	
1	1	1	1	CDP	ILIM_HI	CDP	Data lines disconnected Load Detect function active

USB 3.0 Connector(UB3)

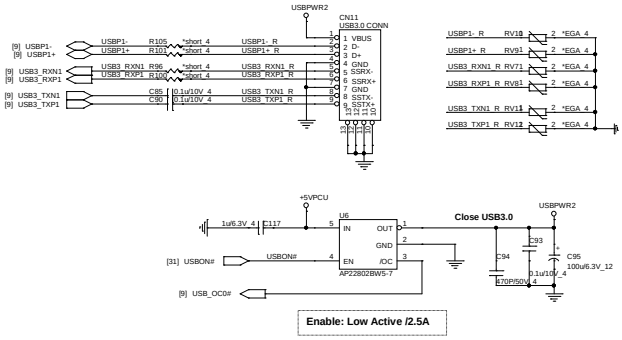

Card Reader (CRD)

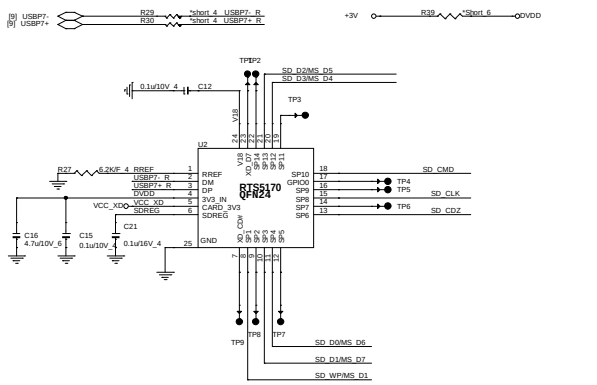

USB IO D/B (UB2)

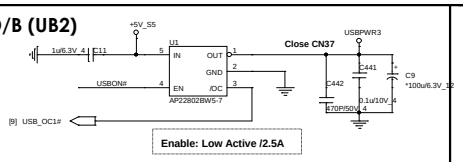

D/B USB Port

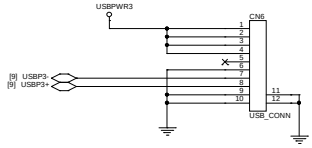

SD/MMC CARD READER (CRD)

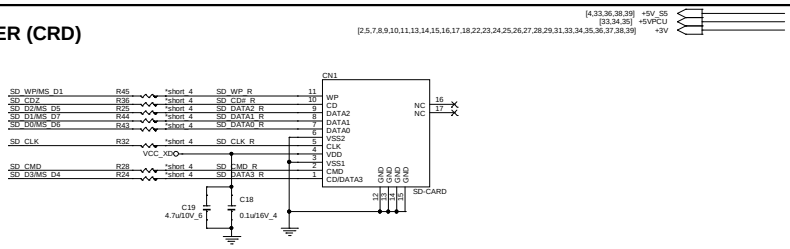

Quanta Computer Inc.

PROJECT : ZRT/ZRTA

Size	Document Number	Rev
	USB Port/ DB	1A

Date: Wednesday, February 11, 2015 Sheet 30 of 44

Laptopblue

EC(KBC)

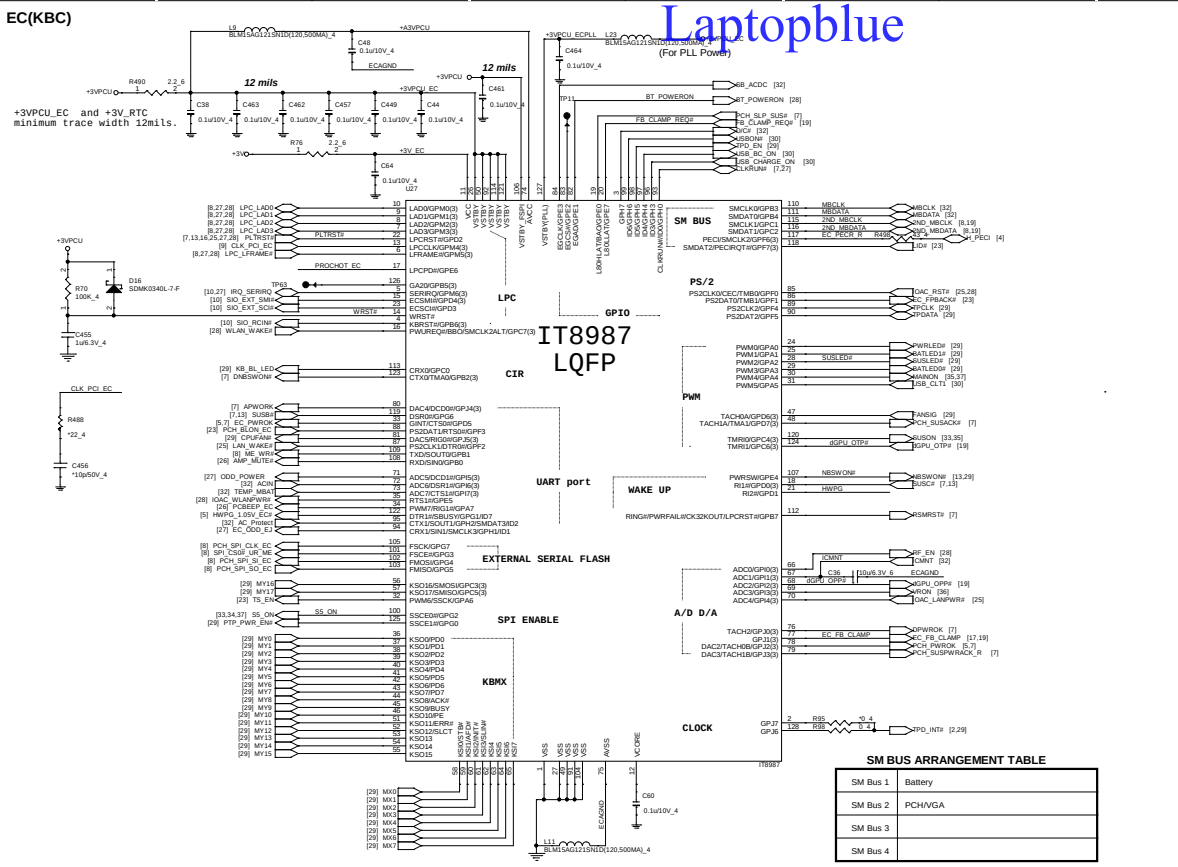

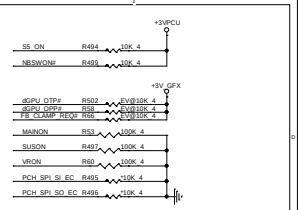

SM BUS PU(KBC)

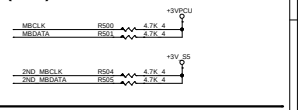

Battery B/I SW

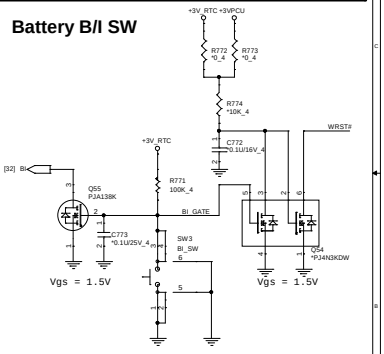

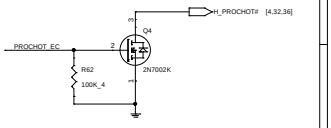

SM BUS ARRANGEMENT TABLE

SM Bus 1	Battery
SM Bus 2	PCH/VGA
SM Bus 3	
SM Bus 4	

HWPG(KBC)

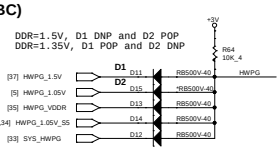

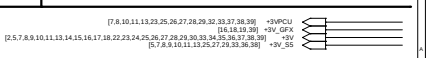

Quanta Computer Inc.	
PROJECT : ZRT/ZRTA	
Size	Document Number: KBC IT8587 — Rev 3A
Date: Wednesday, February 11, 2015	Sheet 31 of 44

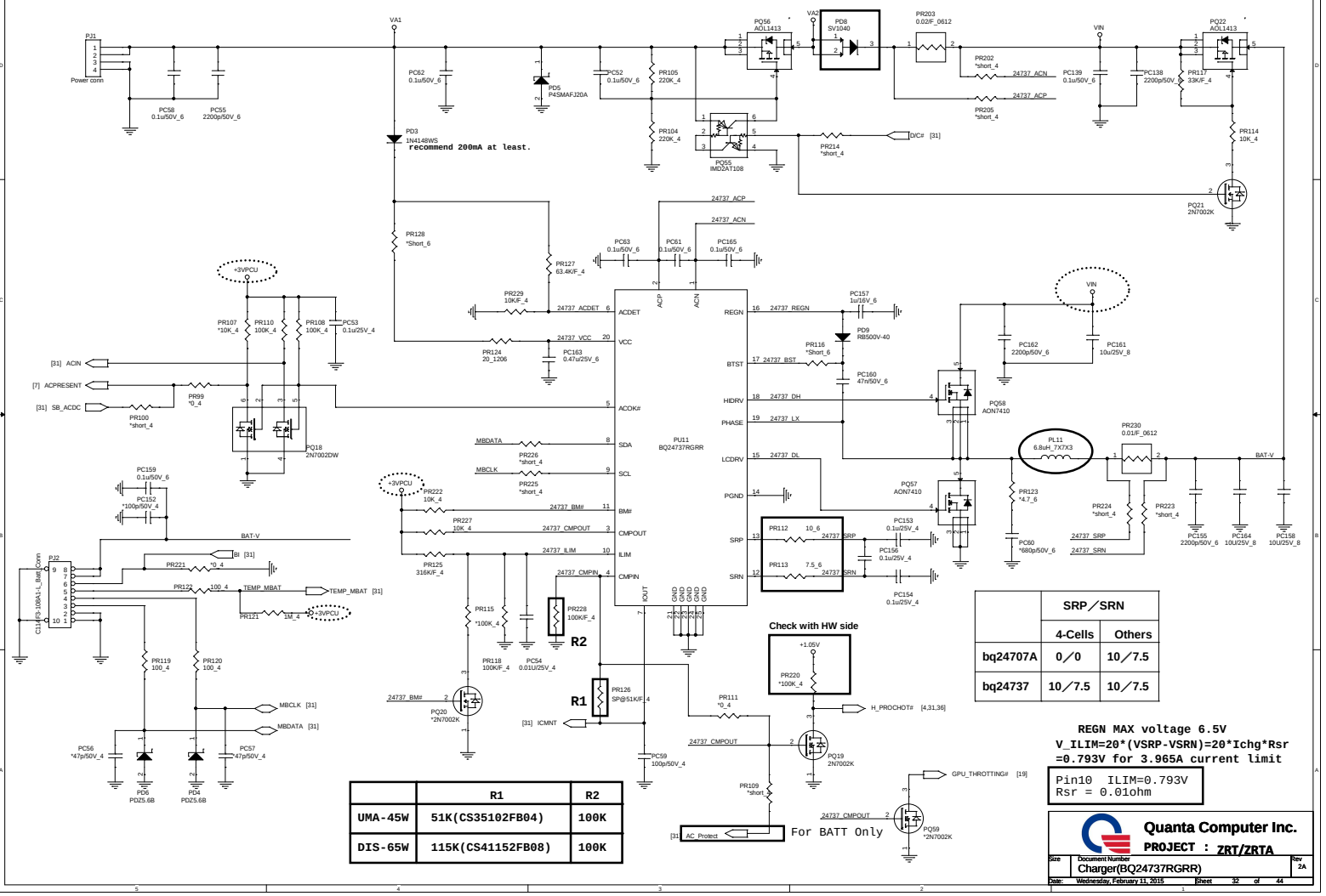

	SRP／SRN	
	4-Cells	Others
bq24707A	0／0	10／7.5
bq24737	10／7.5	10／7.5

	R1	R2
UMA-45W	51K(CS35102FB04)	100K
DIS-65W	115K(CS41152FB08)	100K

REGN MAX voltage 6.5V
V_ILIM=20*(VSRP-VSRN)=20*Ichg*Rsr
=0.793V for 3.965A current limit

Pin10 ILIM=0.793V
Rsr = 0.01ohm

Quanta Computer Inc.
PROJECT : ZRT/ZRTA

Size	Document Number	Rev
	Charger(BQ24737RGRR)	2A

Date: Wednesday, February 11, 2015 Sheet 32 of 44

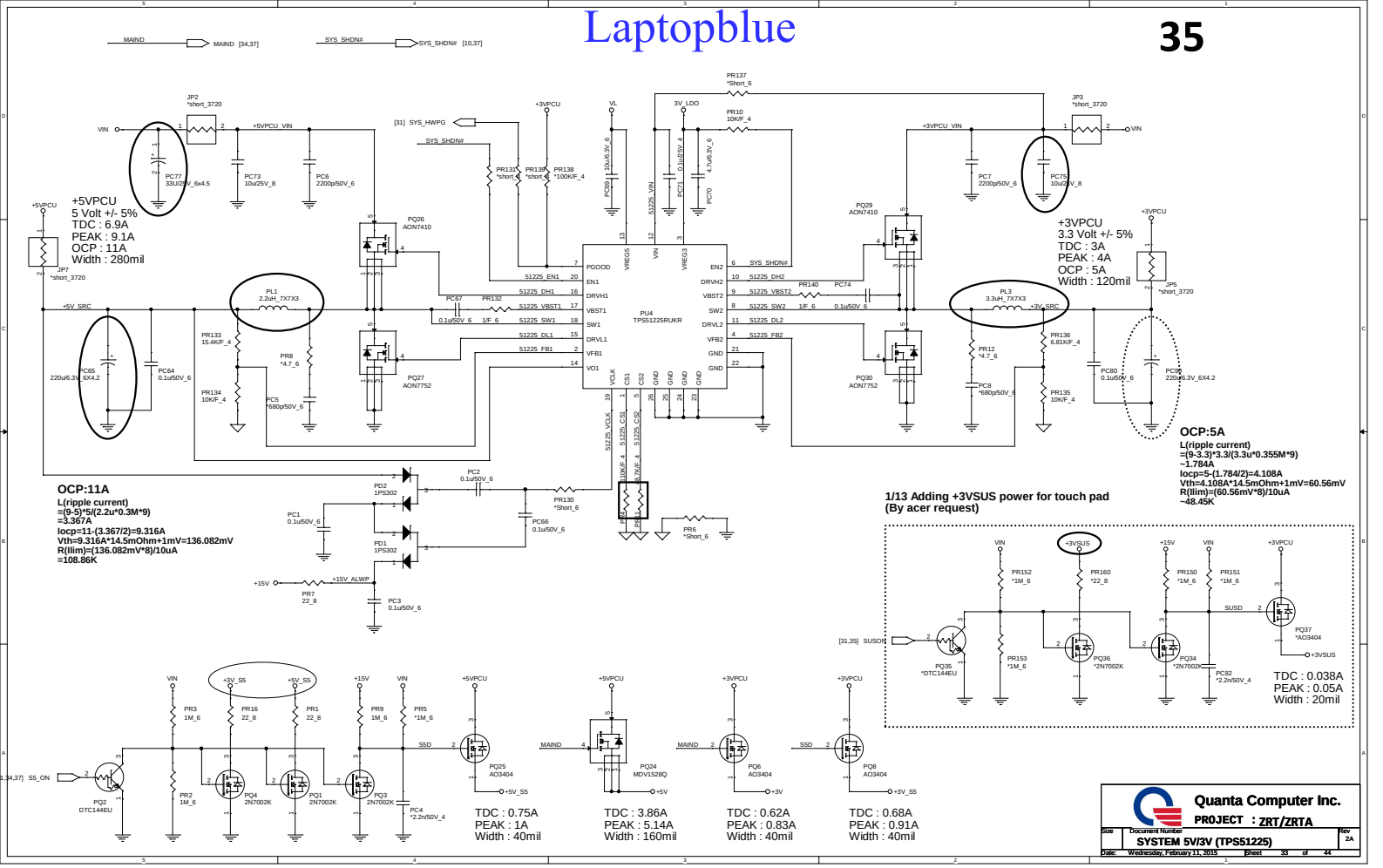
MAIND
MAIND [34,37]
SYS_SHDN#
SYS_SHDN# [10,37]
JP2 *short_3720
VIN
+5VPCU_VIN
PC77 33U/25V_6x4.5
PC73 10u/25V_8
PC6 2200p/50V_6
+5VPCU
JP7 *short_3720
+5VPCU
5 Volt +/- 5%
TDC : 6.9A
PEAK : 9.1A
OCP : 11A
Width : 280mil
+5V_SRC
PC65 220u/6.3V_6X4.2
PC64 0.1u/50V_6
PR133 15.4K/F_4
PR134 10K/F_4
PL1 2.2uH_7X7X3
PR8 *4.7_6
PC5 *680p/50V_6
PQ26 AON7410
PQ27 AON7752
[31] SYS_HWPG
SYS_SHDN#
PR131 *short_6
PR139 *short_6
PR138 *100K/F_4
+3VPCU
VL
3V_LDO
PR137 *Short_6
PR10 10K/F_4
PC69 10u/6.3V_6
PC71 0.1u/25V_4
PC70 4.7u/6.3V_6
51225_VIN
PC67 0.1u/50V_6
PR132 1/F_6
51225_EN1
51225_DH1
51225_VBST1
51225_SW1
51225_DL1
51225_FB1
PGOOD
EN1
DRVH1
VBST1
SW1
DRVL1
VFB1
VO1
VREG5
VIN
VREG3
EN2
DRVH2
VBST2
SW2
DRVL2
VFB2
GND
PU4 TPS51225RUKR
51225_VCLK
51225_CS1
51225_CS2
PC2 0.1u/50V_6
PR130 *Short_6
PC66 0.1u/50V_6
PD2 1PS302
PD1 1PS302
PC1 0.1u/50V_6
+15V
+15V_ALWP
PR7 22_8
PC3 0.1u/50V_6
PR6 *Short_6
OCP:11A
L(ripple current)
=(9-5)*5/(2.2u*0.3M*9)
=3.367A
Iocp=11-(3.367/2)=9.316A
Vth=9.316A*14.5mOhm+1mV=136.082mV
R(Ilim)=(136.082mV*8)/10uA
=108.86K
JP2 *short_3720
JP3 *short_3720
+3VPCU_VIN
PC7 2200p/50V_6
PC75 10u/25V_8
PQ29 AON7410
PQ30 AON7752
PR140 1/F_6
PC74 0.1u/50V_6
PL3 3.3uH_7X7X3
+3V_SRC
PR12 *4.7_6
PC8 *680p/50V_6
PR136 6.81K/F_4
PR135 10K/F_4
PC80 0.1u/50V_6
PC90 220u/6.3V_6X4.2
JP5 *short_3720
+3VPCU
3.3 Volt +/- 5%
TDC : 3A
PEAK : 4A
OCP : 5A
Width : 120mil
OCP:5A
L(ripple current)
=(9-3.3)*3.3/(3.3u*0.355M*9)
~1.784A
Iocp=5-(1.784/2)=4.108A
Vth=4.108A*14.5mOhm+1mV=60.56mV
R(Ilim)=(60.56mV*8)/10uA
~48.45K
1/13 Adding +3VSUS power for touch pad
(By acer request)
VIN
+3VSUS
PR152 *1M_6
PR153 *1M_6
PR160 *22_8
PQ36 *2N7002K
+15V
PR150 *1M_6
PQ34 *2N7002K
PR151 *1M_6
SUSD
PC82 *2.2n/50V_4
+3VPCU
PQ37 *AO3404
+3VSUS
[31,35] SUSON
PQ35 *DTC144EU
TDC : 0.038A
PEAK : 0.05A
Width : 20mil
+3V_S5
PR3 1M_6
PR16 22_8
PR1 22_8
PR2 1M_6
PQ4 2N7002K
PQ1 2N7002K
+15V
PR9 1M_6
PQ3 2N7002K
PR5 *1M_6
PC4 *2.2n/50V_4
[34,37] S5_ON
PQ2 DTC144EU
S5D
+5VPCU
PQ25 AO3404
+5V_S5
TDC : 0.75A
PEAK : 1A
Width : 40mil
MAIND
PQ24 MDV1528Q
+5V
TDC : 3.86A
PEAK : 5.14A
Width : 160mil
+3VPCU
PQ6 AO3404
+3V
TDC : 0.62A
PEAK : 0.83A
Width : 40mil
+3VPCU
PQ8 AO3404
+3V_S5
TDC : 0.68A
PEAK : 0.91A
Width : 40mil
Quanta Computer Inc.
PROJECT : ZRT/ZRTA
Size
Document Number
SYSTEM 5V/3V (TPS51225)
Rev 2A
Date: Wednesday, February 11, 2015
Sheet 33 of 44

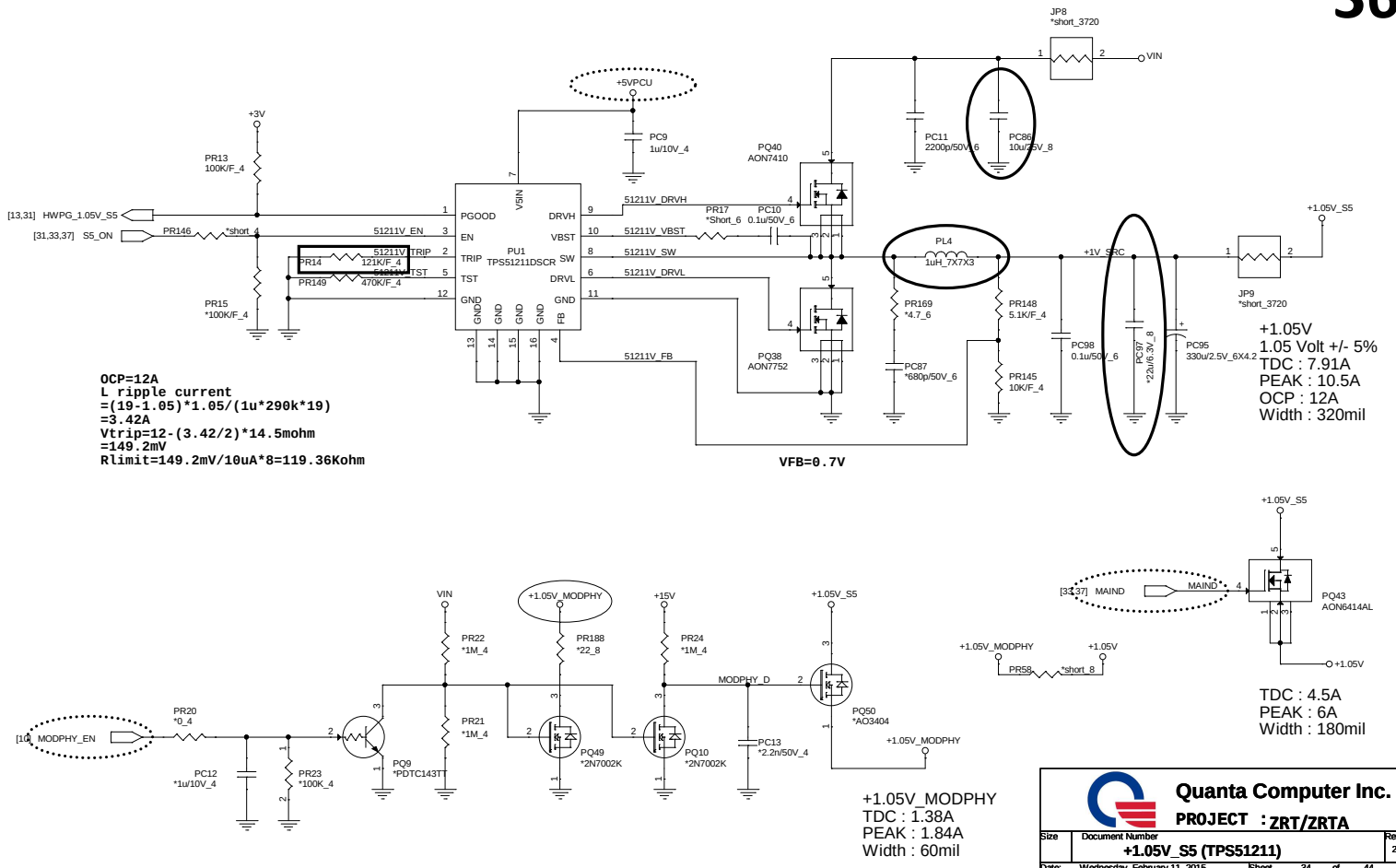

Quanta Computer Inc.	PROJECT : ZRT/ZRTA	
Size	Document Number: +1.05V_S5 (TPS51211)	Rev 2A
Date: Wednesday, February 11, 2015	Sheet 34 of 44	

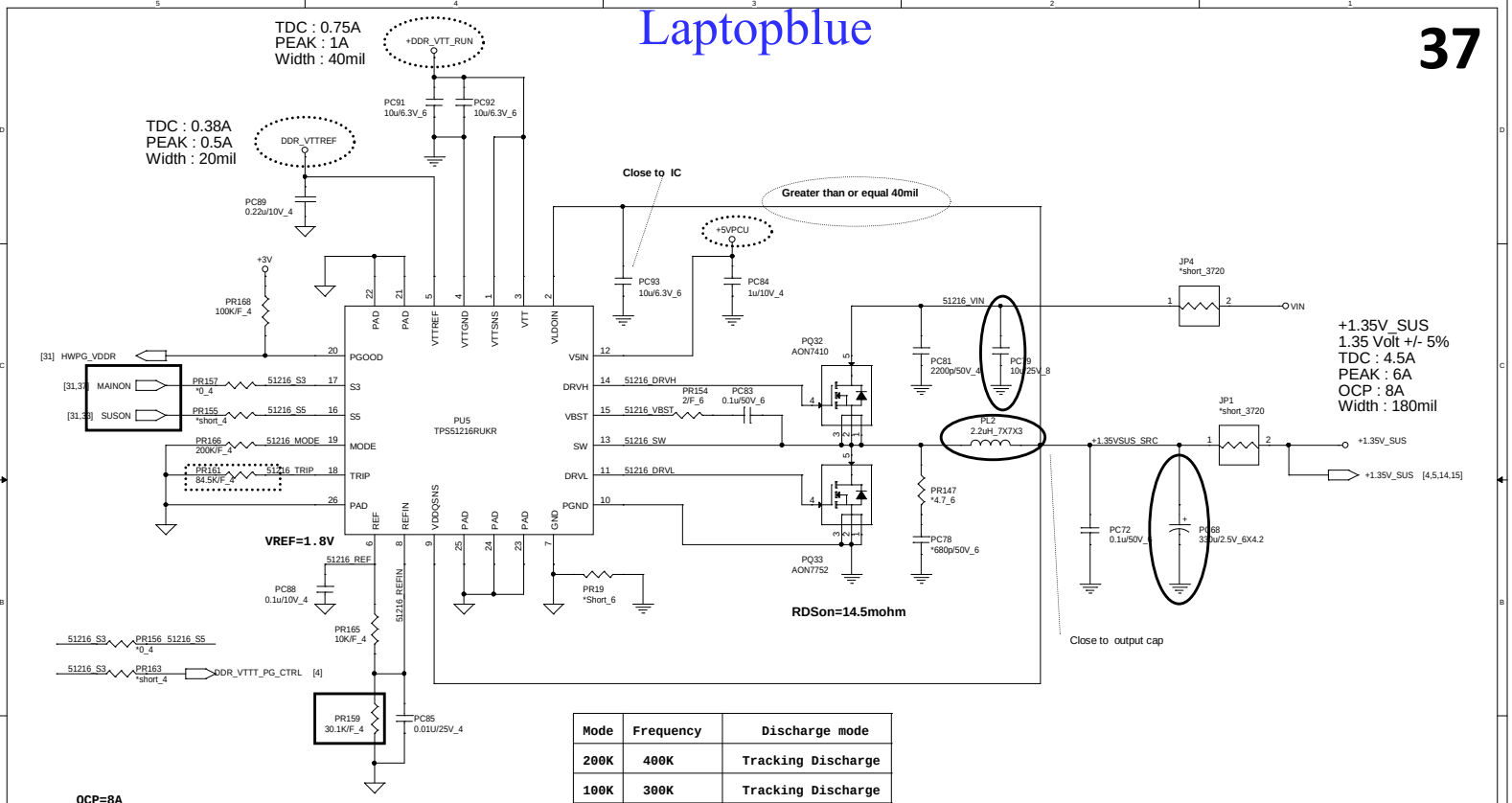

Mode	Frequency	Discharge mode
200K	400K	Tracking Discharge
100K	300K	Tracking Discharge

OCP=8A
L ripple current
=(19-1.35)*1.35/(2.2u*400k*19)
=1.425A
Vtrip=8-(1.425/2)*14.5mohm
=105.668mV
Rlimit=105.668mV/10uA*8=84.53Kohm

DDR=1.35V
PR84=10K/F_4
PR86=30.1K/F_4

	S3	S5	+1.35VSUS	REF	VTT
S0	1	1	ON	ON	ON
S3 (mainon off)	0	1	ON	ON	OFF
S4/S5	0	0	OFF	OFF	OFF

Quanta Computer Inc.
PROJECT : ZRT/ZRTA

Size	Document Number	Rev
	DDR 1.35V(TPS51216)	2A

Date: Wednesday, February 11, 2015 Sheet 35 of 44

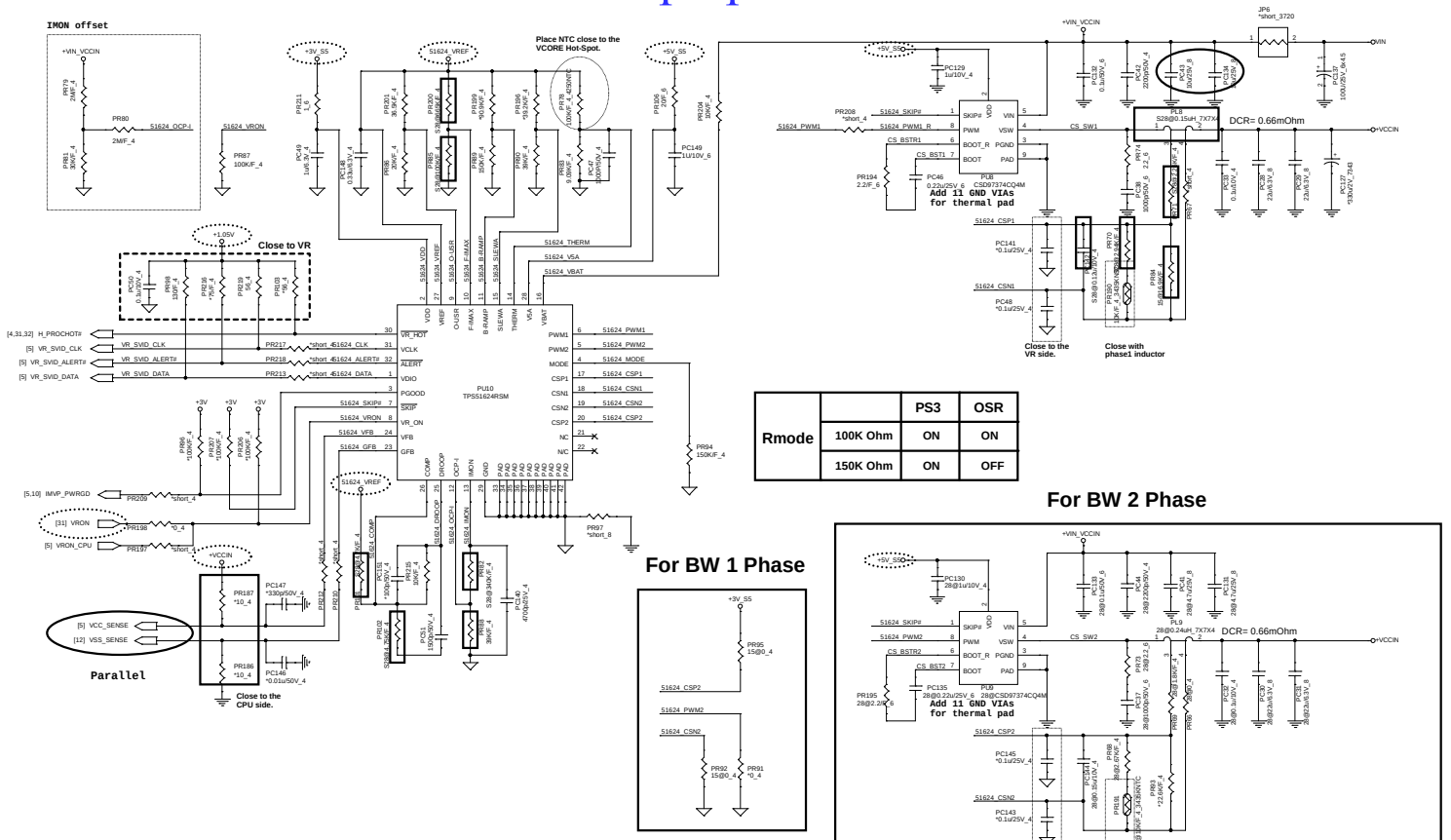

Rmode		PS3	OSR
	100K Ohm	ON	ON
	150K Ohm	ON	OFF

For BW 1 Phase

For BW 2 Phase

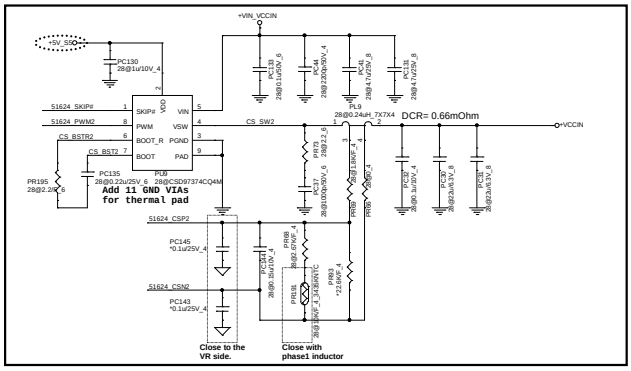

BW-U 15W (1 phase)

Icc TDC PL2：14A

Icc Max：32A

OCP：37A

Fsw：1.2MHz

VCORE L/L：

R_DC_LL：- 2.0mV/A

R_AC_LL：- 7.0mV/A

BW-U 28W (1 phase)

Icc TDC PL2：19A

Icc Max：40A

OCP：47A

Fsw：800KHz

VCORE L/L：

R_DC_LL：- 2.0mV/A

R_AC_LL：- 7.0mV/A

S28@

BW-U 28W 2 phase			
Location	Value	Location	Value
PL8	CV+24P0MZ00	PR85	CS35622FB10
PR71	CS21822FB14	PR101	CS22372FB11
PR82	CS41502FB18	PR102	CS31002FB26
PR70	CS22672FB12	PR200	CS42942FB13
PC142	CH4152K9B02		
Block 1.	Stuff		

PL9 0.24uH_7X7X4

PR84、PR93 *22.6K/F_4

PR92、PR95 *0_4

PC143、PC145 *0.1u/25V_4

Quanta Computer Inc.

PROJECT ：ZRT/ZRTA

Size | Document Number: +VCCIN(TPS51624) | Rev 2A

Date: Wednesday, February 11, 2015 | Sheet 36 of 44

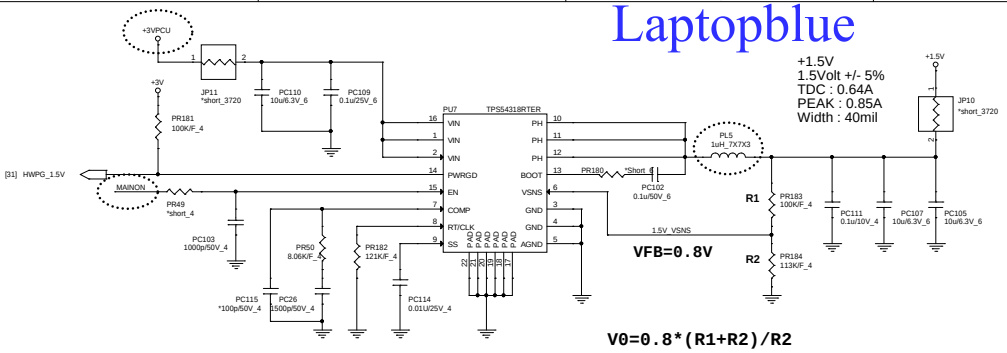

V0=0.8*(R1+R2)/R2

Thermal protection

Need fine tune
for thermal protect point
Note placement position
TEMP=85C

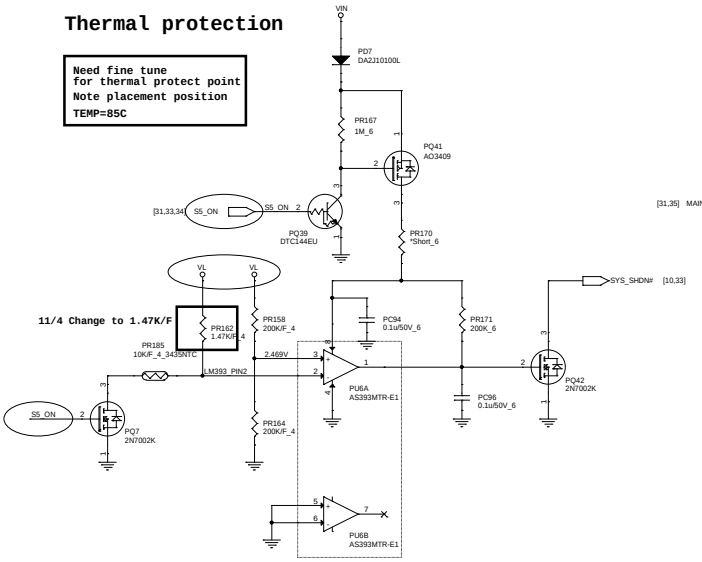

For EC control thermal protection (output 3.3V)

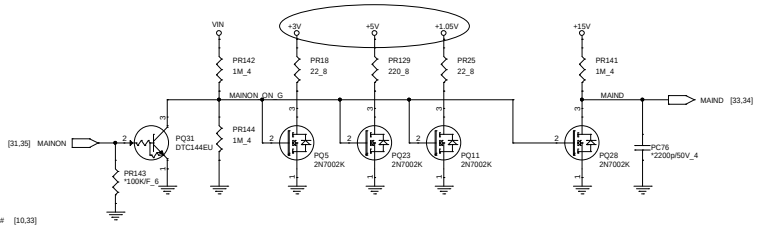

Quanta Computer Inc.
PROJECT : ZRT/ZRTA

Size	Document Number	Rev
	+1.5V/Thermal Protect	2A

Date: Wednesday, February 11, 2015 Sheet 37 of 44

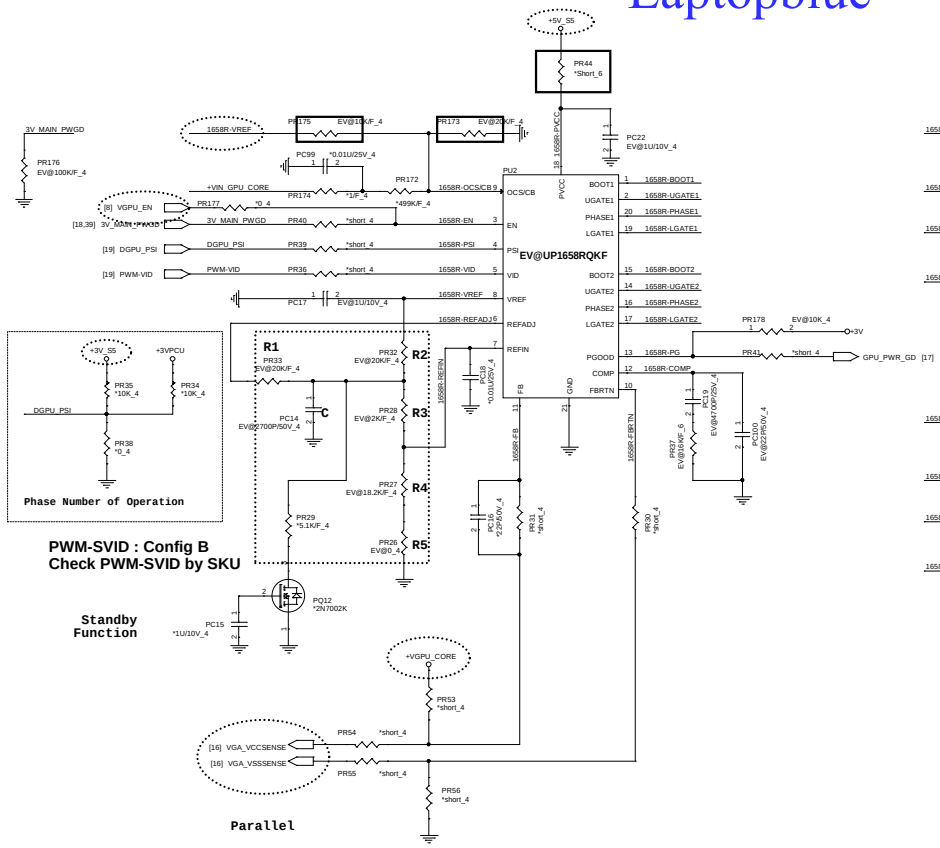

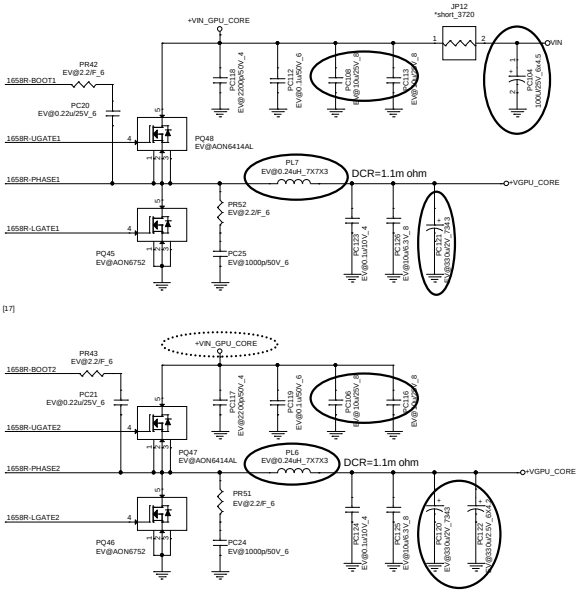

N16S-GT(23W)

+VGPU_CORE
Countinue current:26A
Peak current:51A
OCP:A
FSW:300KHz
L/L=0mV/A

Quanta Computer Inc.			
PROJECT : ZRT/ZRTA			
Size	Document Number		Rev
	+VGPU_CORE(UP1642PQAG)		2A
Date: Wednesday, February 11, 2015	Sheet 38 of 44		

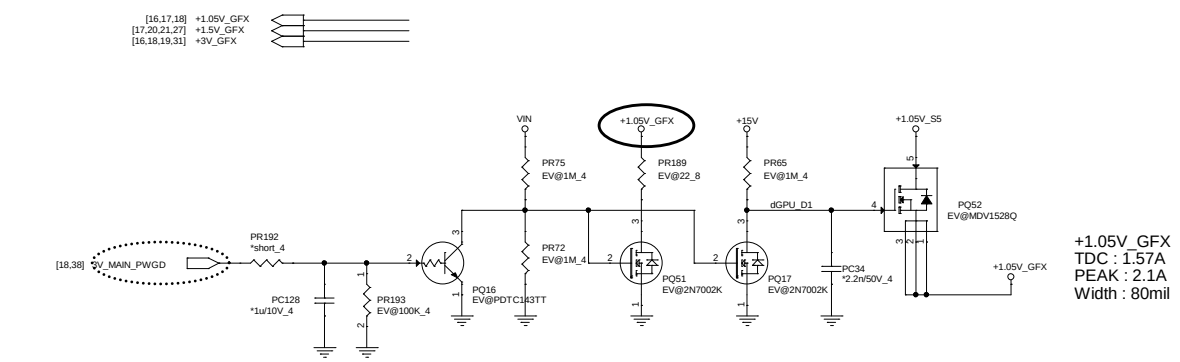

+1.05V_GFX
TDC : 1.57A
PEAK : 2.1A
Width : 80mil

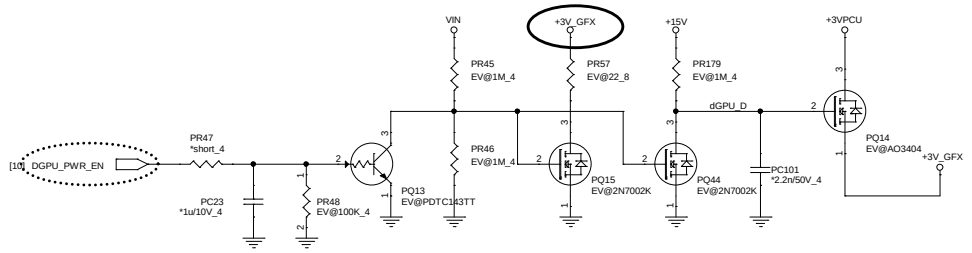

+3V_GFX
TDC : 0.05A
PEAK : 0.06A
Width : 20mil

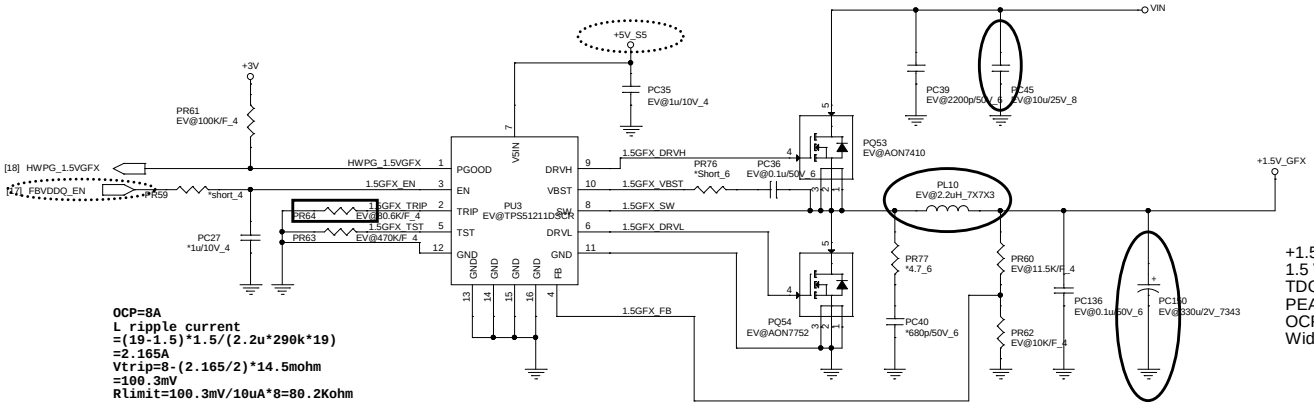

+1.5V_GFX
1.5 Volt +/- 5%
TDC : 3.06A
PEAK : 4.08A
OCP : 5A
Width : 140mil

OCP=8A
L ripple current
=(19-1.5)*1.5/(2.2u*290k*19)
=2.165A
Vtrip=8-(2.165/2)*14.5mohm
=100.3mV
Rlimit=100.3mV/10uA*8=80.2Kohm

VFB=0.704V

Quanta Computer Inc.		
PROJECT : ZRT/ZRTA		
Size	Document Number: +1.5V_GFX/+1.05V_GFX/+3V_GFX	Rev 2A
Date: Wednesday, February 11, 2015	Sheet 39 of 44	

VGA power up sequence

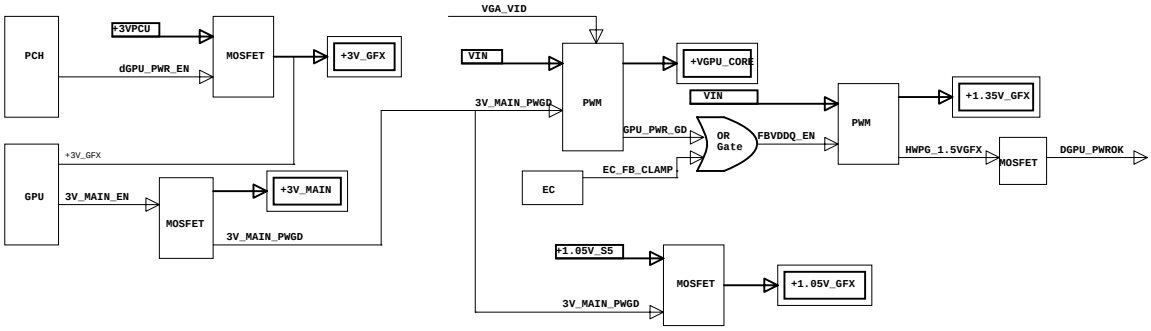

VGA Reset

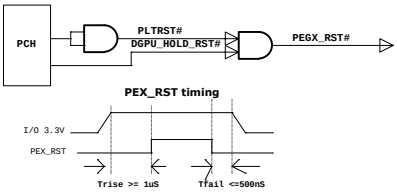

Power States

POWER PLANE	VOLTAGE	DESCRIPTION	CONTROL SIGNAL	ACTIVE IN
VIN	+10V~+19V	MAIN POWER	ALWAYS	ALWAYS
+3V_RTC	+3V~+3.3V	RTC POWER	ALWAYS	ALWAYS
+3VPCU	+3.3V	EC POWER	ALWAYS	ALWAYS
+5VPCU	+5V	USB CHARGE POWER	ALWAYS	ALWAYS
+15V	+15V	CHARGE PUMP POWER	ALWAYS	ALWAYS
+3V_S5	+3.3V	LAN/BT POWER	S5_ON	S0-S5
+5V_S5	+5V	USB POWER	S5_ON	S0-S5
+5V	+5V	HDD/SPK/HDMI POWER	MAINON	S0
+3V	+3.3V	PCH/GPU/Peripheral component POWER	MAINON	S0
+1.35VSUS	+1.35V	CPU/SODIMM/MD POWER	SUSON	S0-S3
+DDR_VTT_RUN	+0.675V	SODIMM/MD Termination POWER	MAINON	S0
LCDVCC	+3.3V	LCD POWER	LVDS_VDDEN	S0
+1.5V	+1.5V	MINI CARD/NEW CARD POWER	MAINON	S0
+1.05V	+1.05V	PCH CORE VCCST POWER	MAINON	S0
+VCCIN	variation	CPU CORE POWER	VRON	S0
+3V_GFX	variation	External GPU POWER	DGPU_PWR_EN	S0
+1.05V_GFX	+3.3V	External GPU POWER	3V_MAIN_EN	S0
+VGPU_CORE	+1.35V	External GPU POWER	3V_MAIN_EN	S0
+1.35V_GFX	+1.05V	External GPU POWER	FBVDDQ_EN	S0

Thermal Follow Chart

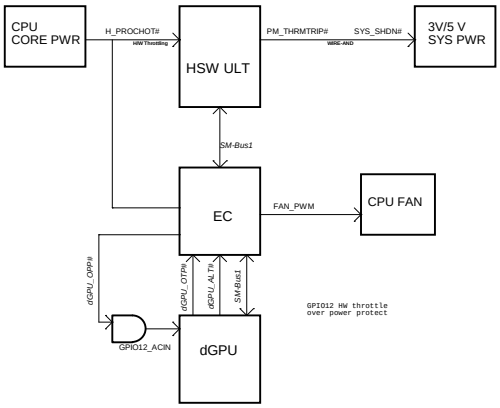

dGPU_OPP# EC notify HW throttle over power protect
dGPU_OTP# VGA thrmtrip# => inform EC over temperature protect

Battery Mode

Laptopblue

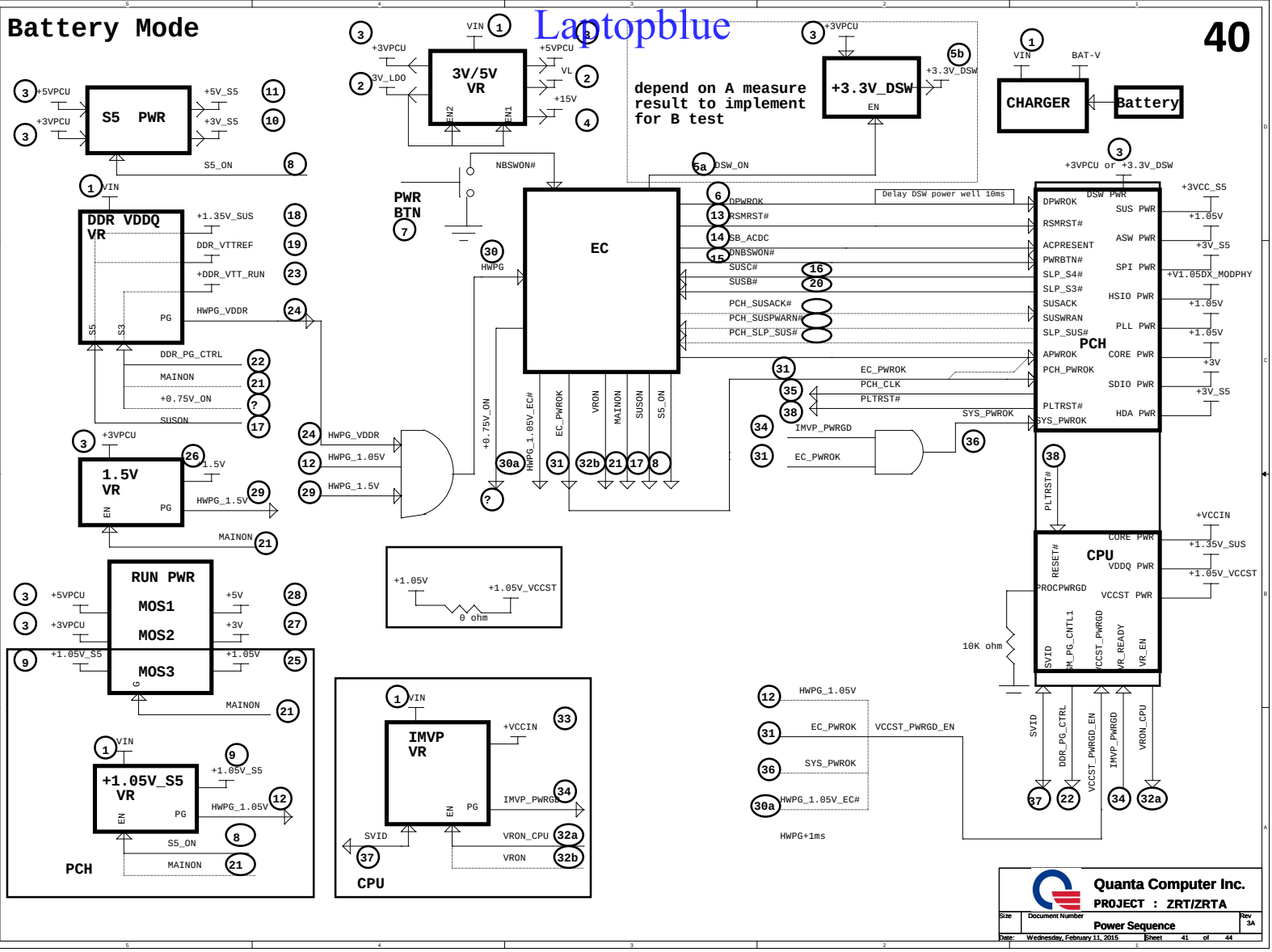

Quanta Computer Inc.

PROJECT : ZRT/ZRTA

Size	Document Number	Rev
	Power Sequence	3A

Date: Wednesday, February 11, 2015 Sheet 41 of 44

Laptopblue

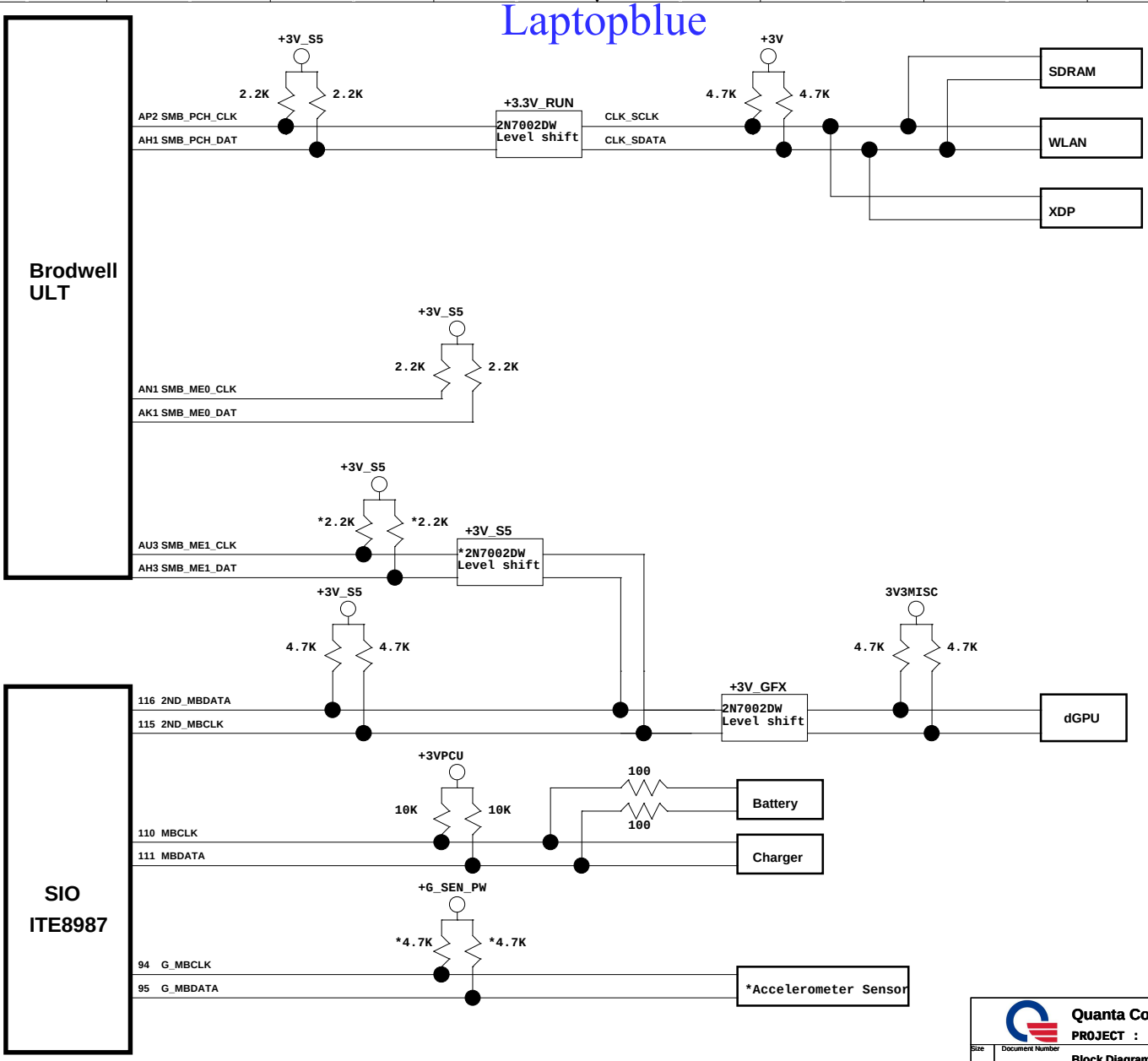

Quanta Computer Inc.

PROJECT : ZRT/ZRTA

Size	Document Number	Rev
	Block Diagram	3A

Date: Wednesday, February 11, 2015 Sheet 42 of 44

實線表defult
虛線表reserve

Laptopblue

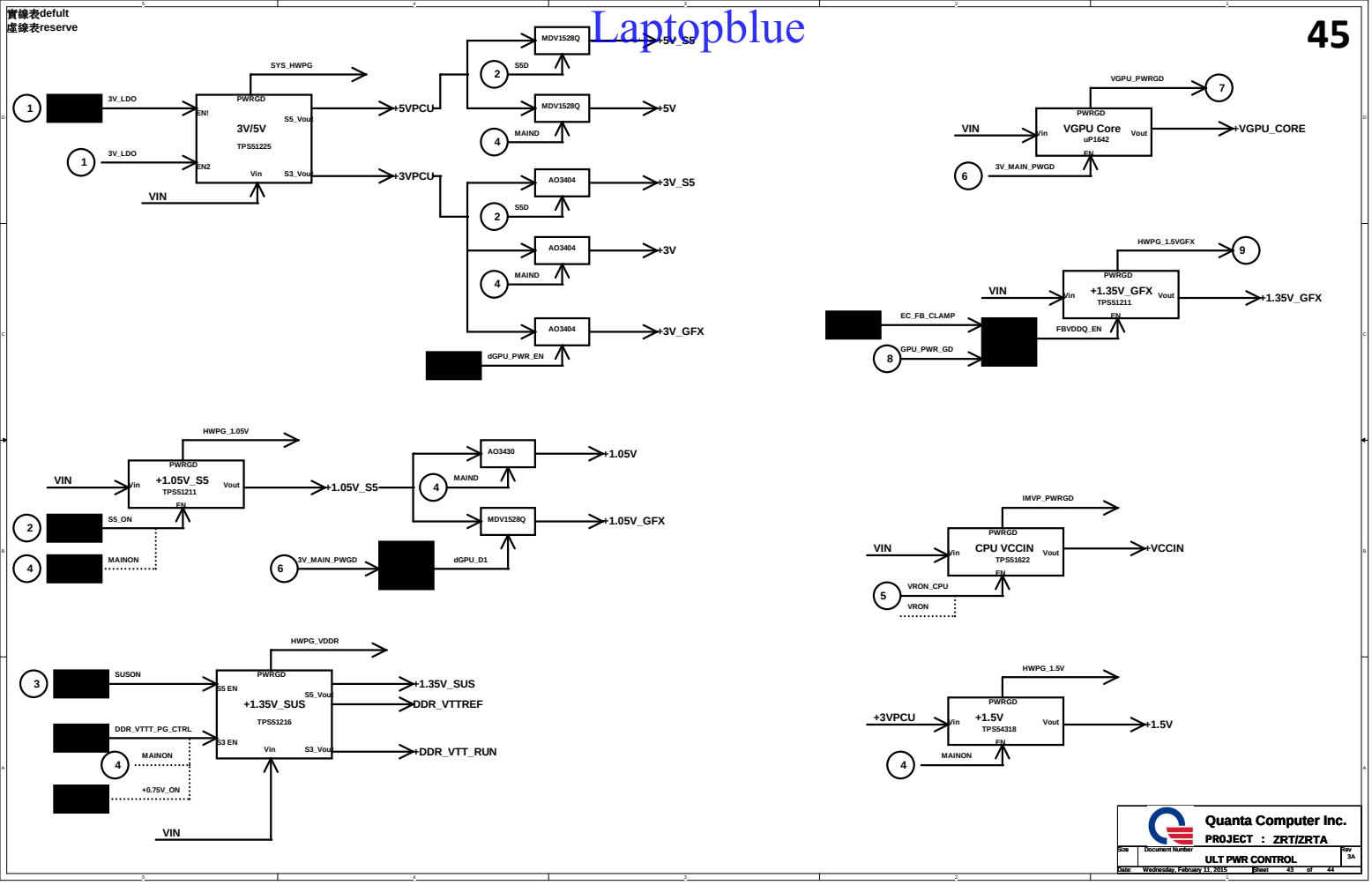

Quanta Computer Inc.

PROJECT : ZRT/ZRTA

Size	Document Number	Rev
	ULT PWR CONTROL	3A

Date: Wednesday, February 11, 2015 Sheet 43 of 44

Laptopblue

Model	Version	CHANGE LIST	
ZQ0	1A-1	1	2013/10/15 change pin define and add pwm IC.(page31)
		2	2013/10/15 Change VGA ITE solution to NXP.(page 23)
		3	2013/10/15 power board CN change to 6pin.(Page 23)
		4	2013/10/15 U5017.12 change 27M crystal to VGA IC.(Page 23)
		5	2013/10/15 U5017.14 add power rail +3V_RTC(page23)
		6	2013/10/15 strap0 R672 DG 50k PU.(Page 19)
		7	2013/10/15 Change AND gat to Q63 D-MOS.(Page 19)
		8	2013/10/15 change pin define and add pwm IC U17.(Page 46)
		9	2013/10/15 for GC6 stuff R228\R1013\R226\R1012.un-stuff Q24\Q26\R227\R1011. (Page19)
		10	20131015 For GC6 NV DG GC6_FB_EN PD.(Page10)
		11	2013/10/15 following up acer define and swap USB3 and USB2 port.(Page9)
		12	2013/10/15 swap CAP C8579/C8580 to Vrefo and resistor R5214/R5215 to Line in.(Page30)
		13	2013/10/15 U27.30/U27.31 del fan Pwm signal.(Page32)
		14	20131015 change LVDS\USB3\RJ45\FAN\TPD\USB DB CN\DC-IN CN\Power Button\Cardreader\KB BLK CN\Power board, footprint.
	1A-2	1	2013/10/16 JDIM5 Swap M_B_DQS2/M_B_DQS3 and swap M_B_DQS#2/M_B_DQS#3.(page15)
		2	2013/10/16 JDIM6 Chage net name M_B_DQS#[7:0] to M_A_DQS#[7:0].(page14)
		3	2013/10/16 Add RTC charge circuit.(page8)
		4	2013/10/16 BT1.1 Chage +3V_RTC_0 to VCCTC_2.(page8)
		5	2013/10/15 change power rail from +3V_RTC_0 to VCCRTC_2.(page23)

DOC NO.	PROJECT MODEL :	ZQ0	APPROVED BY:		DATE:	
	PART NUMBER:		DRAWING BY:		REVISON:	

Quanta Computer Inc.
PROJECT : ZRT/ZRTA
Size | Document Number: Change list-1 | Rev: 3A
Date: Wednesday, February 11, 2015 | Sheet 44 of 44